Course: **DC Machines and Transformers**

Course Code: **24AEEE31T**

Branch: **EEE**

Prepared by: **Baya Reddy Lomada**

Designation: **Assistant Professor**

Department: **Electrical and Electronics Engineering**

Title of the Course: DC Machines and Transformers

Category: PCC

Semester: III

Course Code: 24AEEE31T

Branch/es: EEE

Lecture Hours	Tutorial Hours	Practice Hours	Credits
3	0	0	3

Course Objectives:

1. To discuss the construction, operation, and performance characteristics of DC generators and motors.
2. To describe the starting methods, speed control techniques, and performance testing of DC machines.
3. To explain the operation and derive performance parameters of single-phase transformers under various conditions.
4. To conduct standard tests and compare the performance of two-winding and autotransformers.
5. To interpret poly-phase transformer connections and explain the operation of special configurations like Scott connections and tap changers.

Course Outcomes:

At the end of the course, the student will be able to

1. Understand the construction, operation, characteristics, and applications of DC generators and DC motors.
2. Analyze starting methods, speed control techniques, and testing procedures to evaluate the performance and efficiency of DC machines.
3. Explain the principle, operation, equivalent circuit, and performance characteristics of single-phase transformers.
4. Interpret various tests on transformers and auto transformers to determine their parameters and operational characteristics.
5. Understand poly-phase transformer connections, vector groups, three-winding transformers, tap changers, and their practical applications.

Unit 1 DC Generators and DC Motors 10

Construction of DC machines and principle of operation of DC generator – EMF equation – excitation techniques – classification of DC generators – armature reaction and commutation – characteristics of DC generators – applications of DC generators – principle of operation of DC motor – classification of DC motors– significance of back-emf – torque equation of DC motor – characteristics of DC motors – applications of DC motors.

Unit 2 Starting, Speed Control and Testing of DC Machines: 10

Losses and efficiency, necessity of a starter – starting by 3-point starter – speed control by armature voltage and field current control–testing of DC machines–Brake test, Swinburne's test – Hopkinson's test – Field's Test.

Unit 3 Single-phase Transformers: 10

Construction – principle of operation of single-phase transformer – classification – emf equation – operation on no-load and on load – equivalent circuit – regulation – losses and efficiency – effect of variation of frequency and supply voltage on losses – applications.

Unit 4 Testing of Transformers and Auto Transformer: 10

Open circuit test – short circuit test – Sumpner's test – separation of core losses— Parallel operation with equal and unequal voltage ratios – auto transformer – equivalent circuit – comparison with two winding transformers.

Unit 5 Three-Phase Transformers: 10

Polyphase connections- Y/Y, Y/Δ, Δ/Y, Δ/Δ, open Δ and Vector groups – third harmonics in phase voltages – three winding transformers – transients in switching – off load and on load tap changers – Scott connection.

Prescribed Textbooks:

1. Electrical Machinery by Dr. P S Bimbhra, 7th edition, Khanna Publishers, New Delhi,1995.
2. Performance and analysis of AC machines by M.G. Say, CBS, 2002.

Reference Books:

1. Electrical Machines by D. Kothari, I .J .Nagarth, McGraw Hill Publications, 5th edition
2. Electrical Machinery Fundamentals by Stephen J Chapman McGraw Hill education 2011.
3. Generalized Theory of Electrical Machines by Dr. P S Bimbhra, 7th Edition, Khanna Publishers, 2021
4. Theory & Performance of Electrical Machines by J.B.Gupta, S.K.Kataria & Sons,2007.
5. Electric Machinery by A. E. Fitzgerald, Charles Kingsley, and Stephen D. Umans, 7th edition, McGraw-Hill Education, 2014.

CO-PO-PSO Mapping:

Course Outcomes	Engineering Knowledge	Problem Analysis	Design/Development of solutions	Conduct investigations of complex problems	Modern tool usage	The engineer and society	Environment and sustainability	Ethics	Individual and team work	Communication	Project management and finance	Life-long learning	PSO1	PSO2
24AEEE31T .1	3	2	-	-	-	-	-	-	-	-	-	-	3	-
24AEEE31T .2	3	2	-	2	2	-	-	-	-	-	-	-	3	3
24AEEE31T .3	3	2	-	-	-	-	-	-	-	-	-	-	3	-
24AEEE31T .4	3	2	-	2	2	-	-	-	-	-	-	-	3	3
24AEEE31T .5	3	2	-	-	-	-	-	-	-	-	-	-	3	-

DC Generators and DC Motors

Syllabus: Construction of DC machines and principle of operation of DC generator – EMF equation – excitation techniques – classification of DC generators – armature reaction and commutation – characteristics of DC generators – applications of DC generators – principle of operation of DC motor – classification of DC motors – significance of back-emf – torque equation of DC motor – characteristics of DC motors – applications of DC motors

DC Machine: DC machine is an electromechanical energy conversion device i.e it converts electrical energy into mechanical energy or mechanical energy into electrical energy. There are two types of DC machines; those are DC Generator and DC motor.

DC Generator: DC Generator is a machine which converts Mechanical energy into Electrical energy.

Ex: Dynamo

DC Motor: DC Motor is a machine, which converts Electrical energy into Mechanical energy.

Ex: Water lifting pump, Fan

DC Machines Constructional details:

The following figure shows the main parts of 4 pole DC machine.

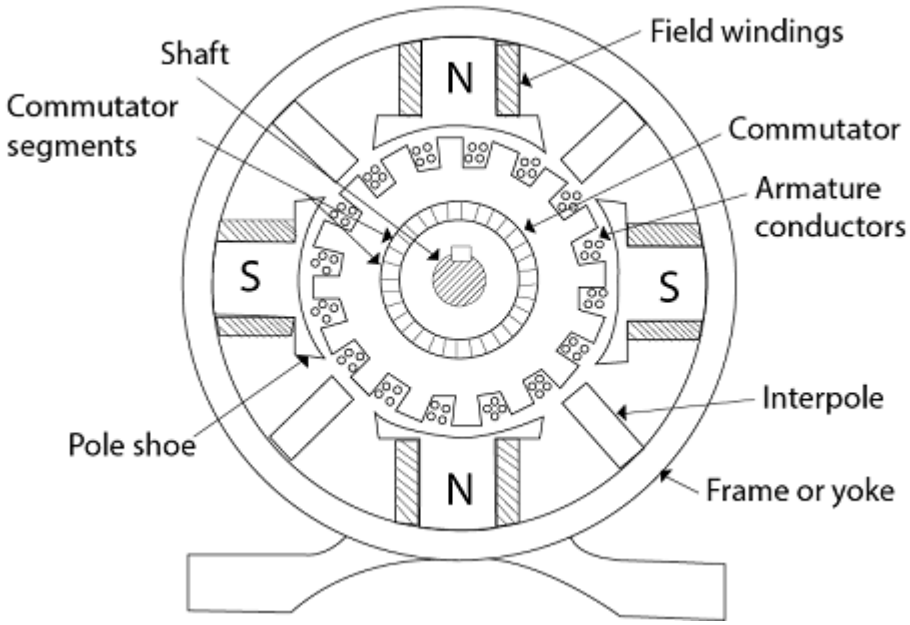

Magnetic Frame or Yoke:

The outer part of the dc machine is called yoke. The main poles and inter-poles are fixed to this yoke. The yoke is made of cast steel or rolled steel for the large machines and for the smaller size machine the yoke is generally made of cast iron. The main purposes of the yoke are

- It provides a mechanical support for the pole cores.
- It acts as protecting cover to the inner parts of the machines.
- It provides a low reluctance path for the magnetic flux.

Pole core and Pole shoes:

The Pole Core and Pole Shoes are fixed to the magnetic frame or yoke by bolts. Each pole core has a curved surface called as pole shoe. Usually, the pole core and shoes are made of silicon steel and also laminated. The poles are laminated to reduce the Eddy Current loss.

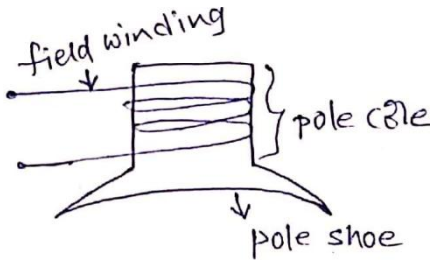

The poles core serves the following purposes given below:

- It supports the field or exciting coils.
- They spread out the magnetic flux uniformly.
- It provides a low reluctance magnetic path for magnetic flux.

Field or Exciting coils:

Each pole core has one or more field coils (windings) placed over it to produce a magnetic field. The enamelled copper wire is used for the construction of field or exciting coils. The coils are wound on the rectangular former and then placed around the pole core.

When direct current passes through the field winding, it magnetizes the poles, which in turns produces the flux. The field coils of all the poles are connected in series in such a way that when current flows through them, the adjacent poles attain opposite polarity.

Armature core:

The rotating part of the dc machine is called as Armature. The armature core of DC Generator is cylindrical in shape and keyed to the rotating shaft. The armature has grooves or slots which accommodate the armature winding.

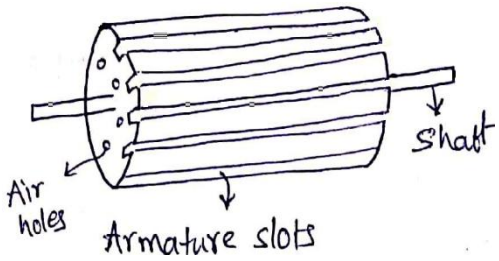

The main functions of Armature core of a DC machine serves are

- It houses the conductors in the slots.
- It provides a path for the magnetic flux.

The Armature/Armature core is made with silicon steel material to reduce the hysteresis losses. When the rotating armature cuts the magnetic field, an emf is induced in it. This emf circulates the eddy current which results in Eddy Current loss. Thus to reduce the loss the armature core is laminated about 0.3 to 0.5 mm thickness. Each lamination is insulated from the other by a coating of varnish.

Armature winding:

The enamelled copper wire is used for the construction of armature winding. Armature winding is a place where the power conversion takes place. In the case of a DC Generator here, mechanical power is converted into electrical power. On the basis of connections, the windings are classified into two types named as Lap Winding and Wave Winding.

Commutator:

The Commutator is cylindrical in shape and is made from a number of wedge-shaped hard drawn copper bars or segments. Each Commutator segment is connected to the ends of the armature coils. It is the most important part of a DC machine and serves the following purposes.

- It connects the rotating armature conductors to the stationary external circuit through brushes.
- It converts the induced alternating current in the armature conductor into the unidirectional current in the external load circuit in DC Generator action, whereas it converts the alternating torque into unidirectional (continuous) torque produced in the armature in motor action.

Brushes:

The brushes in the DC machine are made with Carbon material and are placed or mounted on the Commutator. The main function of brushes is the collect the current from the commutator and supply the current to the load.

Bearings:

The ball or roller bearings are used in DC machines. The function of the bearings is to reduce friction between the rotating and stationary parts of the machine.

Shaft:

The shaft is made of mild steel with a maximum breaking strength. The shaft is used to transfer mechanical power from or to the machine. The rotating parts like armature core, Commutator, cooling fans, etc. are mounted on the shaft.

DC Machine as a DC Generator (or) Operating principle of DC Generator:

The DC Generator works on Faraday's laws of electromagnetic induction principle i.e '*Whenever a rotating conductor is placed in magnetic field, an emf will induced across the conductors'*.

Let us consider a single turn conductor running with a constant speed is placed in a magnetic field as shown in Fig.(1). The working of the DC Generator is explained as follows:

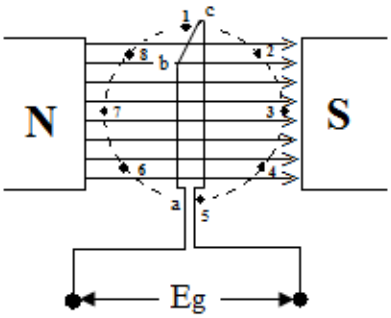

Figure. (1)

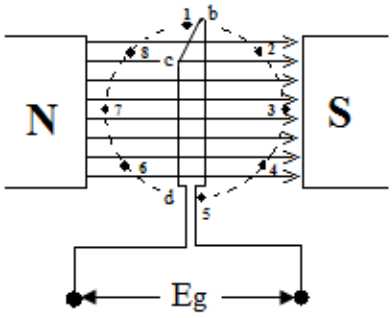

Figure. (2)

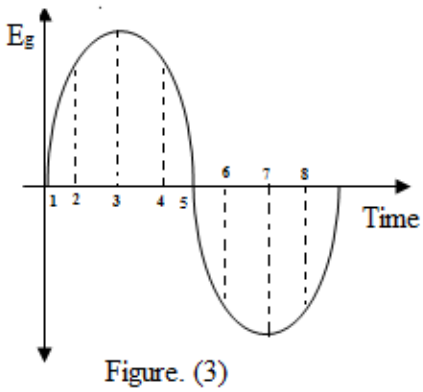

Figure. (3)

When the conductor is in position-1, the flux linking with the conductor is maximum and the change in flux (dΦ/dt) is minimum, so the *emf* induced across the conductor is zero. At position-2, the flux linking with the conductor is decreasing and the change in flux (dΦ/dt) is increasing from zero, hence the *emf* induced across the conductor is increasing from zero as shown in fig.(3).

At position-3, the flux linking with the conductor is minimum and the change in flux (dΦ/dt) is maximum, so the *emf* induced across the conductor is maximum. At position-4, the flux linking with the conductor is increasing from minimum and the change in flux (dΦ/dt) is decreasing from maximum value, hence the *emf* induced across the conductor is decreasing from maximum as shown in fig.(3).

At position-5, the flux linking with the conductor is maximum and the change in flux (dΦ/dt) is minimum, so the *emf* induced across the conductor is minimum. At position-6, the flux linking with the conductor is decreasing and the change in flux (dΦ/dt) is increasing from zero, hence the *emf* induced across the conductor is increasing from zero as shown in fig.(3) but the direction of induced *emf* is negative from conductor position 5 to 1.

DC Machine as a DC Motor (or) Operating principle of DC Motor:

It works on principle that '*When a current carrying conductor is placed in magnetic field, it experiences a force and the direction of the force is given by Fleming's left hand rule'*. Fleming's left hand rule states that " Stretch out the first finger, second finger and thumb of your left hand so that they are at right angles to one another. The first finger point the direction of magnetic field from N-pole to S-pole, second finger points the direction of current and thumb will indicates the direction rotation of conductor"

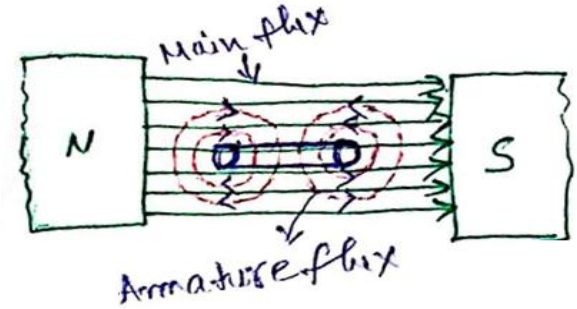

Figure (2)

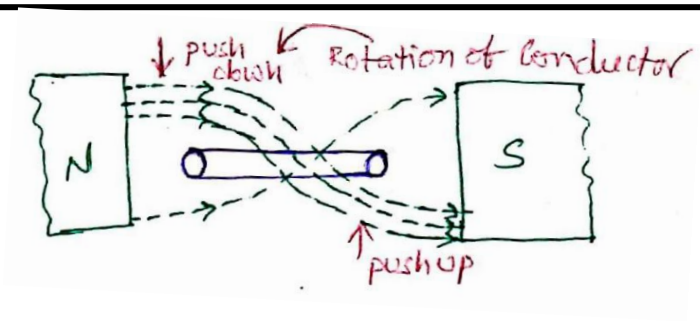

Figure (1)

Consider a conductor is placed in magnetic field. When a DC supply is connected to conductor, current flows through it which set up its own flux around the conductor as shown in fig.(1). Let, the flux from N-pole to S-pole is main flux and the flux around the conductor is flux due to current carrying conductor. Now the interaction of both main flux and flux due to current carrying conductor, a force may act on conductor and conductor moves in anti-clock wise direction as shown in fig(2).

Armature Windings:

Armature winding is a place where the conversion of power takes place. In the case of a DC Generator here, mechanical power is converted into electrical power. On the basis of connections, the windings are classified into two types named as Lap Winding and Wave Winding.

Lap Winding:

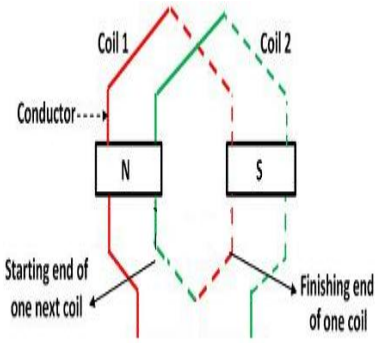

In Lap winding, the coil is lap back to the succeeding coil as shown in Figure. The conductors are connected in such a way that the number of parallel paths (A) equals to the number of poles (P). Consider the machine has P poles, Z armature conductors, and A parallel paths. Each path will have Z/P conductors in series. The number of brushes is equal to the A number of parallel paths.

The Lap winding is mainly classified as

(i) Simplex Lap winding

(ii) Duplex Lap winding.

Simplex Lap Winding – In this winding, the number of parallel paths is equal to the number of poles.
Duplex Lap Winding – In duplex lap winding the number of parallel paths is twice to the number of poles.
Lap winding is used in low voltage, high current machines.

Wave Winding:

The one end of the coil is connected to the starting end of the other coil which has the same polarity as that of the first coil as shown in figure. The coils are connected in wave shape and hence it is called wave winding. The conductors (Z) the wave winding are split into two parallel paths, and each path had conductors in series. The number parallel paths is equal to 2, The number of brushes is equal to 2. *Wave winding is used in high voltage, low current machines.*

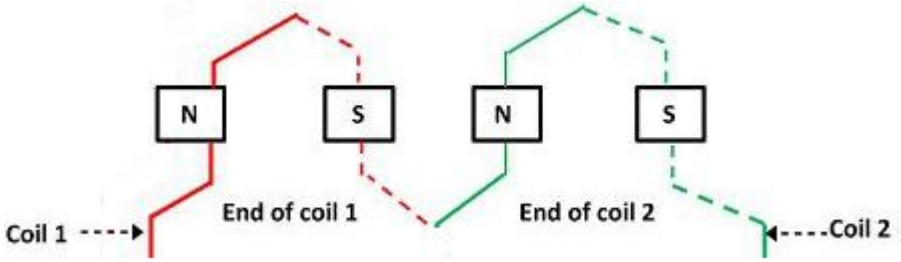

E.M.F. Equation of a DC Machine/D.C. Generator

□□= flux/pole in Wb, P = number of poles, N = Speed of armature in r.p.m.

Z = No. of armature conductors = No. of slots * conductors/slot

A = No. of parallel paths = P ... for Lap winding, A= 2 ... for Wave winding

E_g = Generated EMF or EMF/parallel path

According to faraday's laws of electromagnetic induction principle, average induced EMF = d□□dt

Where d□□□□Flux cut by a conductor in one revolution = P□□wb

dt = Time taken to complete one revolution

Since the generator making 'N' no. of revolutions per minute, no. of revolutions made by the generator per sec = N / 60

□□Time taken to complete one revolution □dt) = $\frac{1}{N/60}$ = 60/N □

Average value of induced EMF / conductor = $\frac{P\Phi}{60/N} = \frac{P\Phi N}{60}$

The DC generator has 'Z' no. of armature conductors and are divided into 'A' no. of parallel paths, then no. of conductors per each parallel path is 'Z/A'.

□ Induced EMF per each parallel path = $\frac{P\Phi N}{60} * \frac{Z}{A}$

Induced EMF (or) Generated EMF (E_g) = $\frac{\Phi ZN}{60} * \frac{P}{A}$ Volts

Prob A 4 pole DC generator runs at 750 rpm and generates an emf of 240V. The armature has 792 conductors. Calculate the total flux/pole when the armature winding is (i) Lap (ii) wave.

Solve Given that No. of poles (P) = 4 ; Speed (N) = 750 rpm

Emf (E_g) = 240V ; No. of conductors (Z) = 792

(i) Lap winding i.e No. of parallel paths (A) = No. of poles (P) = 4

We have

Generated Emf $E_g = \frac{\phi ZN}{60} * \frac{P}{A}$

Flux/pole (ϕ) = $\frac{E_g \cdot 60}{Z \cdot N} * \frac{A}{P} = \frac{240 * 60 * 4}{792 * 750 * 4}$

= 0.02424 Wb

(ii) wave winding i.e No. of parallel paths (A) = 2

We have Generated Emf (E_g) = $\frac{\phi ZN}{60} * \frac{P}{A}$

Flux/pole (ϕ) = $\frac{E_g \cdot 60}{Z \cdot N} * \frac{A}{P} = \frac{240 * 60 * 2}{792 * 750 * 4}$

= 0.01212 Wb

prob A Four pole generator having wave winding armature winding has 51 slots, each slot containing 20 conductors. What will be the voltage generated in the machine when driven at 1500 rpm assuming the flux per pole to be 7 mwb?

solve Given that No. of poles (P) = 4; Flux per pole (ϕ) = 7 mwb

Speed (N) = 1500 rpm; No. of Conductors (Z) = No. of slots * Conductors/slot
$= 51 * 20 = 1020$

$$\text{Generated Emf } (E_g) = \frac{\phi Z N}{60} * \frac{P}{A} = \frac{7\times10^{-3} * 1020 * 1500}{60} * \frac{4}{2}$$
$$= 178.5\ V$$

prob A 8 pole generator has 500 armature conductors and has useful flux/pole of 0.065 wb. What will be the emf generated if it is lap connected and runs at 1000 rpm? What must be the speed at which it is to be driven to produce the same emf if it is wave wound.

solve Given that No. of poles (P) = 8; No. of Conductors (Z) = 500

flux/pole (ϕ) = 0.065 wb; Speed (N) = 1000 rpm

(i) Lap wound

$$\text{Generated Emf } (E_g) = \frac{\phi Z N}{60} * \frac{P}{A} = \frac{0.065 * 500 * 1000}{60} * \frac{8}{8}$$
$$= 541.67 \text{ Volt}$$

(ii) wave wound & generated emf is same

$$\text{Generated Emf} = \frac{\phi Z N}{60} * \frac{P}{A}$$
$$541.67 = \frac{0.065 * 500 * N}{60} * \frac{8}{2}$$

$\therefore$ Speed (N) = 250 rpm

Prob A Lap wound dc shunt generator having 80 slots with 10 conductors per slot generates at no load an Emf of 400V when running at 1000 rpm. At what speed should it be rotated to generate a voltage of 220V on open ckt?

Solve

No. of Conductors = No. of slots * Conductors/slot = 80 * 10
= 800

No load Emf = Generated Emf (Eg) = 400V ; Speed (N) = 1000

We know $E_g = \frac{\phi Z N}{60} * \frac{P}{A} \Rightarrow 400 = \frac{\phi * 800 * 1000}{60} * \frac{P}{P}$ [since for Lap A = P]

$\therefore$ flux/pole (ϕ) = 0.03Wb

When the generated Emf is 220V i.e $E_g = \frac{\phi Z N}{60} * \frac{P}{A}$

$220 = \frac{0.03 * 800 * N}{60} * \frac{P}{P}$

$\therefore$ Speed (N) = 550 rpm.

Armature reaction and its effects:

When the generator is loaded, the **armature** carries the current. The **armature** current sets up its own magnetic field. The **effect** of this **armature** flux on the distribution of main field flux is called **Armature Reaction**.

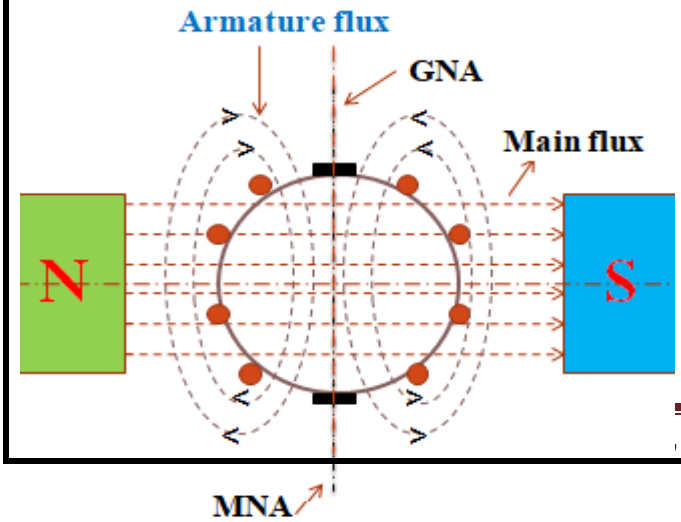

Consider the two poles dc generator. When there is no load on the generator, the armature current becomes zero. In this condition, only the MMF of the main poles exists in the generator. Initially assume that both MNA and GNA are lie on brushes as shown in figure (1).

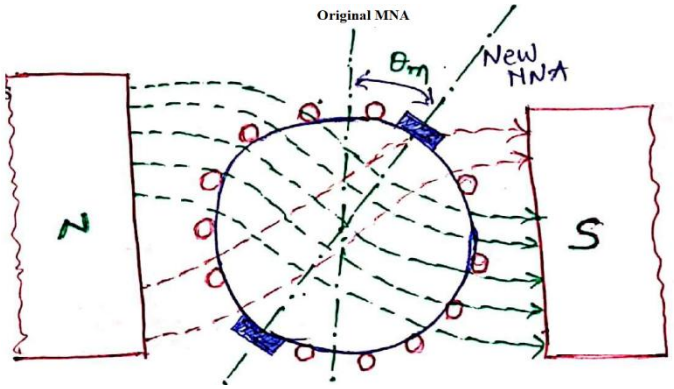

Figure (1)
Figure (2)

Let the generator is on load, now there are two flues inside the generator one produced by main field poles and other by the current in the armature conductors. These two fluxes now combined to form a resultant flux as shown in figure (2). This resultant flux is more in the upper pole tip in the N-Pole and the lower pole tip in the S-Pole. Similarly, there is a reduction of flux in the lower tip of the N-Pole and in the upper pole tipoff the S-Pole. This results in shifting of resultant flux in the direction of rotation of the generator. Since the MNA is always perpendicular to the flux axis, the MNA also shifted.

Effect of Armature Reaction

Armature reaction has two undesirable effects, either it distorts the main field, or it reduces the main field flux, or both.

- When the main field gets distorted, it is known as a **cross magnetizing** effect.
- When the main field flux gets reduced, it is known as the **demagnetizing** effect.

How to reduce the Armature Reaction:

Armature reaction can be reduced with the help of compensating windings and inter poles. To neutralize/reduce the Cross-magnetizing effect of armature reaction in a DC machine, a compensating winding is placed on pole faces as shown in figure.

To neutralize/reduce the De-magnetizing effect of armature reaction, Inter poles are used. Inter-poles are the small auxiliary poles, those placed between the main field poles as shown in figure. Winding on the inter-poles is connected in series with the armature.

Commutation:

The voltage generated in the armature, placed in a rotating magnetic field, of a DC generator is alternating in nature. The **commutation in DC machine** or **commutation in DC generator** is the process in which generated alternating current in the armature winding is converted into direct current after going through the Commutator and the stationary brushes.

*The process of **reversal of current** in the armature winding* is known as **commutation**. The period during which the coil remains short circuited is known as *commutation period.*

- If the commutation process or the reversal of current is completed by the end of the commutation period, it is called ***ideal commutation***.
- If the reversal of current is completed during the commutation period, it is called ***poor commutation***.
- Because of ***poor commutation***, (i) Sparking will occurs at the brush contacts
  (ii) The Commutator surface is damaged due to overheating.

Methods of improving Commutation:

There are three methods of Improving **Commutation** or obtaining sparkles Commutation. Those are (i) Resistance Commutation, (ii) Voltage Commutation and (iii) Compensating Winding.

The voltage commutation is classified as two methods, which are used to produce the injected voltage called as (i) Commutating poles or Inter-poles (ii) Brush Shift.

Resistance Commutation: This method uses Carbon brushes for improving the commutation. The use of Carbon brushes improves the contact resistance between Commutator segments and brushes. This high contact resistance has the tendency to force the current in the short-circuited coil to change according to the commutation requirements.

Voltage Commutation: In this method, the arrangement is made to induce a voltage in the coil undergoing the commutation process, which will neutralize the reactance voltage. This injected voltage will act in opposite direction to the reactance voltage. If the value of the injected voltage is made equal to the reactance voltage, there will be a quick reversal of current in the short-circuited coil and as a result, there will be sparkles Commutation.

The two methods used to produce the injected voltage in opposition to the reactance voltage are as follows.

Brush Shift: In this method of improving commutation, the brushes are shifted forward or backward direction for producing the sufficient reversing emf for eliminating the reactance voltage. In generator case, the brushes are shifted in forward direction. In motor case, the brushes are shifted in backward direction as shown in figure.

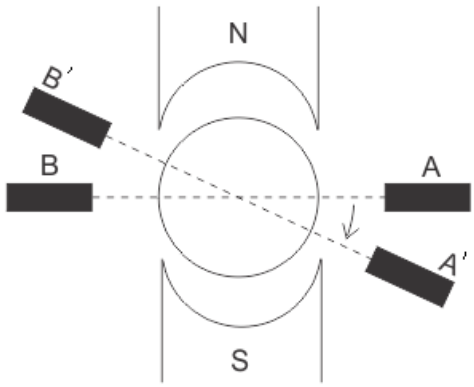

Generator Brush Shift

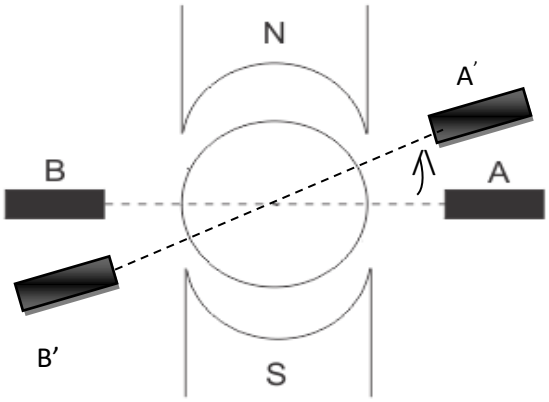

Motor Brush Shift

This method is rarely used because for best result, with every variation of load, the brushes have to be shifted.

Commutating Poles or Inter-Poles:

Inter-poles are small poles and are placed in between the main poles. Inter-poles are also called Commutating poles or Campoles. The Inter-poles windings are connected in series with the armature because the Inter-poles must produce fluxes that are directly proportional to the armature current.

The Inter-poles must induce a voltage in the conductors undergoing commutation that is opposite to the voltage caused by the neutral plane shift and reactance voltage.

In case of a **generator**, the polarity of the inter-pole must be the same i.e. similar to the next main pole further ahead in the direction of rotation. In case of a **Motor**, the polarity of the inter-pole is opposite to that of the next main pole in the direction of rotation.

The **polarity of inter-poles** is shown in the figure below.

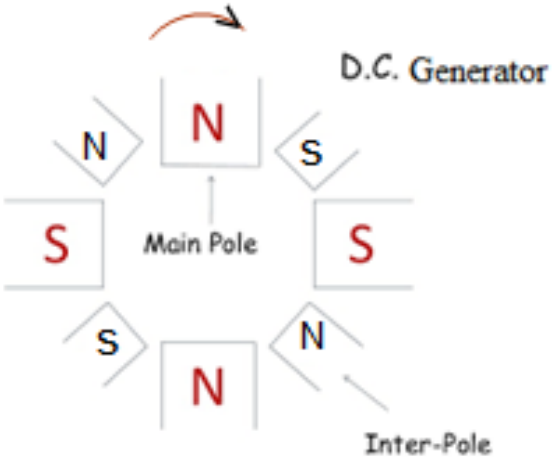

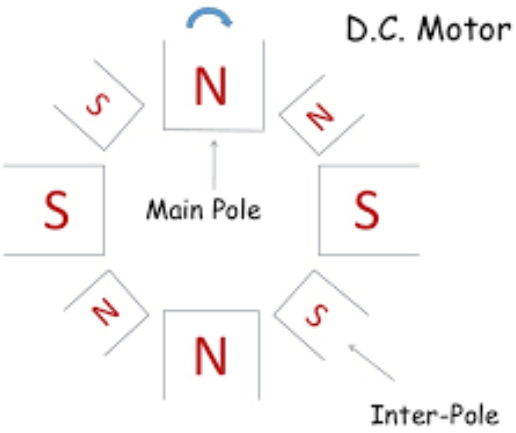

Compensating Windings: It is the most efficient method of eliminating the **Cross magnetizing effect** of armature reaction and flashover by balancing the armature MMF. The compensating winding is placed on pole faces as shown in figure. These windings are connected in series with the armature windings.

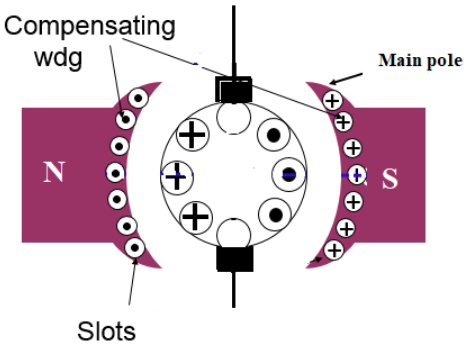

The direction of currents in the compensating winding must be opposite to that in the armature winding just below the pole faces. Thus, compensating winding produces flux that is equal and opposite to the armature flux. The compensating winding neutralizes the armature flux produced by the armature conductors, as a result cross magnetizing effect and flashover are eliminates.

The major drawback with the compensating windings is that they are very costly.

Field Excitation and methods of excitation:

When a dc voltage is applied to the field windings of a dc generator, current flows through the windings and sets up a steady magnetic field. This process is called field excitation i.e *The process of generating a magnetic field using an electric current is called* ***excitation***.

There are three methods of excitation, those are

i) Permanent Magnet excitation: In this method of excitation, the field flux is created by using Permanent Magnets.

ii) Separate Excitation: In this excitation method, the field flux is produced by exciting the field winding by a separate DC source like UPS or battery.

iii) Self Excitation: In this excitation method, the field flux is produced by exciting the field winding by itself due to residual flux in its poles.

Why field excitation is DC only: In dc generator produces dynamically induced emf. To produce dynamically induced emf, it requires a constant or steady state flux. This constant or steady state flux will be produced by exciting the field winding by DC source.

Types of D.C. Generators

DC Generators are generally classified into two according to their field excitation. Those are

(i) Separately excited d.c. generators

(ii) Self-excited d.c. generators

(i) Separately Excited D.C. Generator:

The d.c. generator whose field winding is excited from an external d.c. source (battery) is called a separately excited generator. Fig.1 shows the connections of a separately excited generator. The separately excited d.c. generators are rarely used in practice.

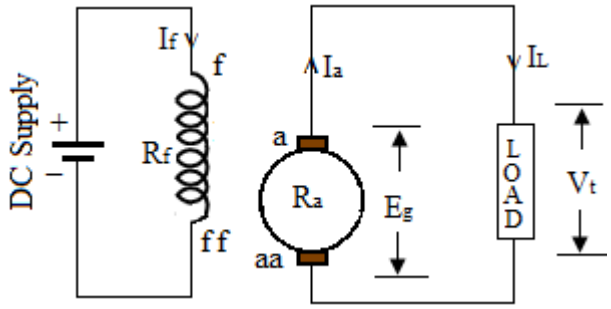

From the diagram

Armature current I_a = Load current I_L

Generated EMF, $E_g = V_t + I_a R_a$ + B.D

Electrical power developed = $E_g I_a$ and

Power delivered to load = $V_t I_L = V_t I_a$

Fig.1: Separately excited DC generator

Where $I_a R_a$ = Armature Resistance drop, V_t = Terminal voltage, I_L = Load current

(ii) Self excited D.C. Generator:

The d.c. generator whose field winding is excited by itself is called a self-excited generator. There are three types of self-excited generators, namely;

(i) DC Shunt generator (ii) DC Series generator (iii) DC Compound generator

DC Shunt generator:

In a DC Shunt Generator, the field winding is connected in parallel with the armature winding as shown in fig (2). The shunt field winding has *many turns* of *thin* wire having high resistance. Therefore, a part of the armature current flows through shunt field winding and the remaining current flows through the load.

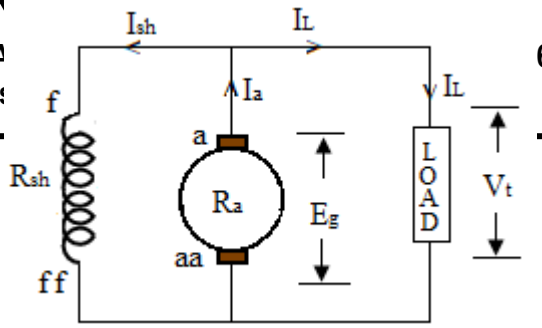

From the diagram,

Armature current $I_a = I_L + I_{sh}$ (or) $I_L = I_a - I_{sh}$

Shunt field current $I_{sh} = V_t / R_{sh}$

Generated EMF $E_g = V_t + I_a R_a + B.D$

Terminal voltage $V_t = E_g - I_a R_a - B.D$

Fig.2: DC Shunt Generator

Power developed in armature = Eg Ia and Power delivered to load = $V_t I_L = V_t (I_a - I_{sh})$

Where I_a = Armature current, R_a = Armature Resistance, V_t = Terminal voltage, I_L = Load current

DC Series generator:

If the field winding is connected in series with armature winding, the generator is called DC Series Generator. The series field winding has a *few turns* of *thick* having low resistance. The DC Series generators are rarely used except for special purposes e.g., as boosters.

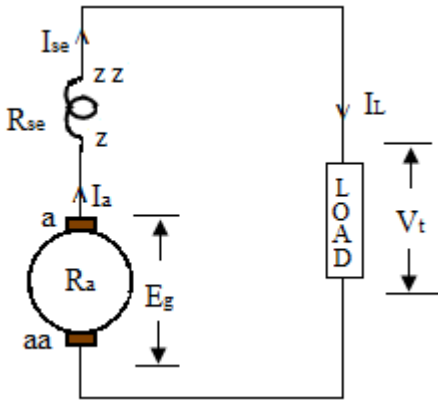

From the circuit,

Armature current = Series field current = Load current

i.e $I_a = I_{se} = I_L$

Generated EMF $E_g = V_t + I_a R_a + I_{se} R_{se} + B.D$

$= V_t + I_a (R_a + R_{se}) + B.D$

Terminal voltage, $V_t = E_g - I_a (R_a + R_{se}) - B.D$

Power developed in armature = Eg Ia

Power delivered to load = $V_t I_L = V_t I_a$ (since $I_a = I_L$)

Fig.3: DC Series Generator

Where I_a = Armature current, R_a = Armature Resistance, V_t = Terminal voltage, I_L = Load current

DC Compound generator:

In a DC compound generator, there are two sets of field windings on each pole, one is in series with the armature and the other in parallel with the armature. Based on these field winding connections, the DC compound generators are classified into

(i) Long shunt compound generator (ii) Short shunt compound generator

Long shunt compound generator:

In a Long Shunt Compound generator, the shunt field winding is in parallel with both series field and armature winding.

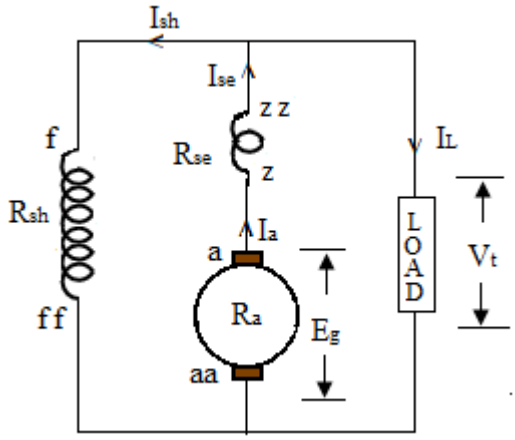

From the diagram

Shunt field current $I_{sh} = V_t / R_{sh}$

Armature current $I_a = I_{se} = I_L + I_{sh}$ (or) $I_L = I_a - I_{sh}$

Generated EMF $E_g = V_t + I_a R_a + I_{se} R_{se} + B.D$

$= V_t + I_a (R_a + R_{se}) + B.D$

Terminal voltage $V_t = E_g - I_a (R_a + R_{se}) - B.D$

Power developed in armature = Eg Ia

Power delivered to load = $V_t I_L = V_t (I_a - I_{sh})$

Where I_a = Armature current, R_a = Armature Resistance, V_t = Terminal voltage, I_L = Load current

Short shunt compound generator:

In a Short Shunt Compound generator, the shunt field winding is connected in parallel with the armature winding only.

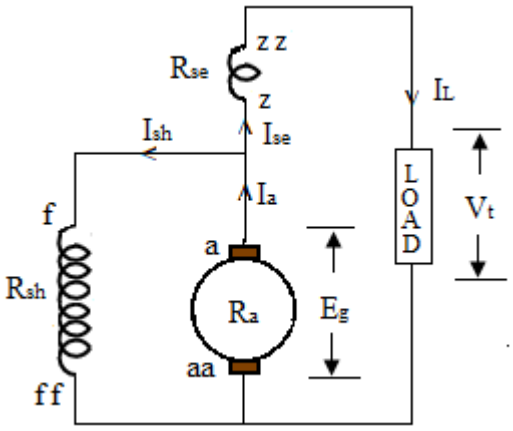

From the diagram

Series field current $I_{se} = I_L$ and Armature current $I_a = I_{se} + I_{sh}$

Shunt field current $I_{sh} = \frac{V_t + I_{se}R_{se}}{R_{sh}}$

Generated EMF $E_g = V_t + I_a R_a + I_{se} R_{se} + B.D$

Terminal voltage $V_t = E_g - I_a R_a - I_{se} R_{se}) - B.D$

Power developed in armature = Eg Ia

Power delivered to load = $V_t I_L = V_t (I_a - I_{sh})$

Where I_a = Armature current, R_a = Armature Resistance, V_t = Terminal voltage, I_L = Load current

No load (or) Magnetization or Open Circuit Characteristic (O.C.C.):

This curve shows the relation between the generated e.m.f. at no-load (E_0) and the field current (I_f) at a constant speed. It is also known as magnetic characteristic or no-load saturation curve. Its shape is practically the same for all generators whether separately or self-excited. The data for O.C.C. curve are obtained experimentally by operating the generator at no load and constant speed and recording the change in terminal voltage as the field current is varied.

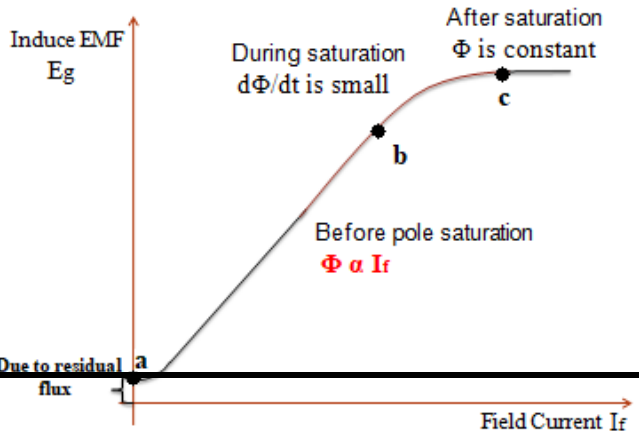

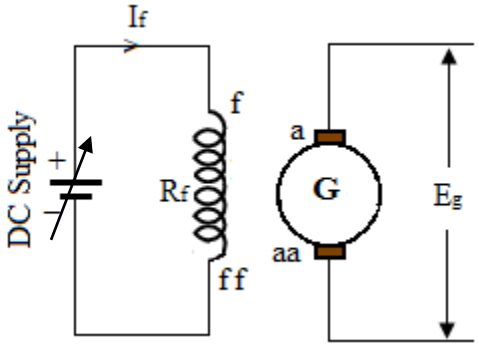

o

The O.C.C. for a d.c. generator is determined as follows. The field winding of the d.c. generator (series or shunt) is separately excited from an external d.c. source as shown in the figure. Now the field current (I_f) is increased from zero in steps and the corresponding values of generated e.m.f. (E_g) are noted. Now plot the graph between E_0 and I_f to get the open circuit characteristic as shown in the figure.

The following points may be noted from O.C.C.:

(i) When the field current is zero, there is some generated e.m.f. 'oa'. This is due to *the residual magnetism* in the field poles.

(ii) Upto certain field current (i.e upto point 'b' in the curve), the curve is linear, because reluctance of iron is negligible as compared with that of the air gap. The air gap reluctance is constant and hence linear relationship.

(iii) After point 'c' on the curve, the poles get saturated, and hence the magnetic flux is constant with field current.

Critical Resistance (Rc):

It is the *maximum* field resistance at which the generator just excites and starts building the voltage at a given speed. It is represented by Rc. If the field resistance is more than the Critical resistance Rc, the generator fails to excite and no voltage will build up.

The critical resistance is the slope of the critical resistance line = $\frac{\Delta E}{\Delta I_f}$

Critical Speed (Nc):

It is the minimum speed at which the machine just excites for the given field resistance. It is denoted by N_C. If the generator speed is less than the Critical speed Nc, the generator fails to excite and no voltage will build up.

How to calculate Rc and Nc from Open circuit curve (OCC):

Initially draw the open circuit curve (OCC) by taking the no-load induced *emf* on *y-axis* and field current (I_f) on *x-axis* as shown in the below figure. Draw a tangent or Rc line to the initial part of the OCC and draw R_{sh} line from the origin as shown in the below figure.

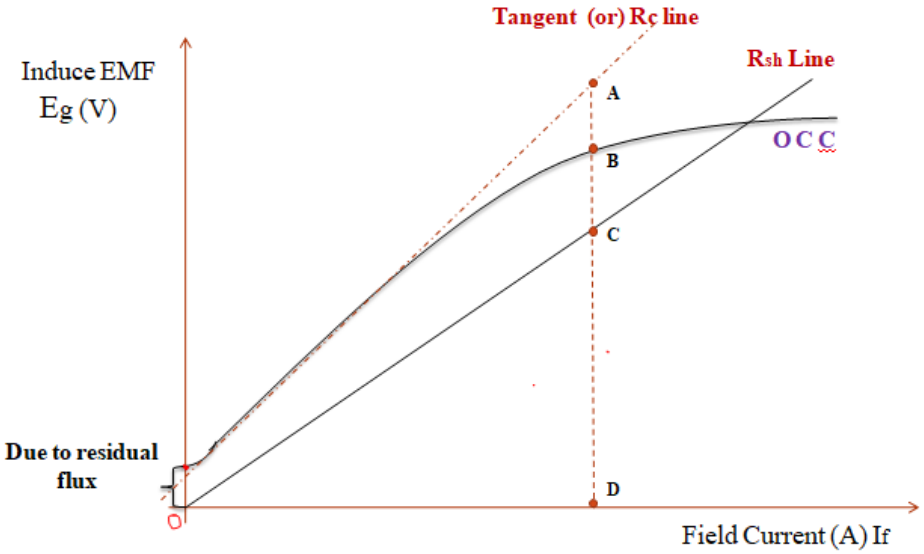

Now the slope of the tangent line or Rc line is the critical resistance for the speed at which the data is given. From the diagram,

$$\text{Critical resistance Rc} = \frac{\text{B D in volts}}{\text{O D in Amps}} / I_f = \text{constant}$$

Now Select any field current say point 'D', draw a vertical line from 'D' to intersect tangent or Rc line at 'A' and R_{sh} line at 'C'. Then the critical speed N_C is,

$$= \frac{\text{C D in volts}}{\text{A D in volts}} * N_{rated}$$

Critical speed Nc

Characteristics of Separately excited DC Generator:

No load or Open Circuit Characteristic (O.C.C.):

This curve shows the relation between the generated e.m.f. at no-load (E_0) and the field current (I_f) at a constant speed. It is also known as magnetic characteristic or no-load saturation curve. The data for O.C.C. curve are obtained experimentally by operating the generator at no load and constant speed and recording the change in terminal voltage as the field current is varied. The O.C.C. of a separately excited DC generator is plotted between E_0 and I_f as shown in the figure.

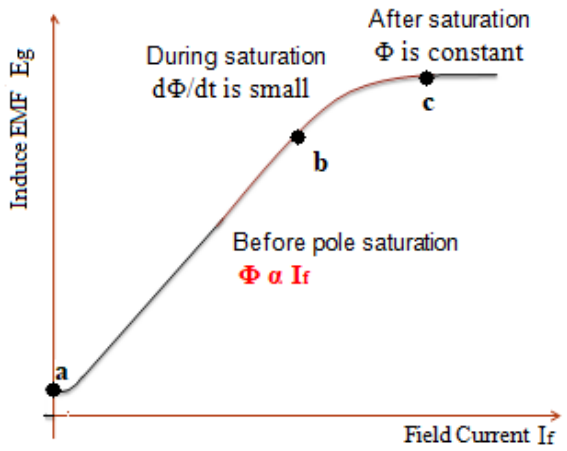

No load or OCC

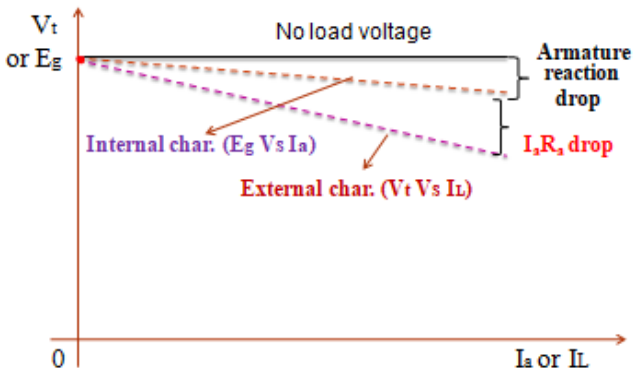

Load characteristics

Load Characteristic:

The load characteristics of separately excited DC generator are classified as internal characteristics and external characteristics.

Internal characteristics:

Internal characteristics are drawn between the generated e.m.f. on load (E_g) and the armature current (Ia). When the generator is loaded, the flux per pole is reduced due to armature reaction. Therefore, e.m.f. generated (E_g) on load is less than the e.m.f. generated (E_0) at no load. As a result, the internal characteristic (E_g Vs Ia) falls down slightly as shown in figure.

External characteristics:

The External characteristics are drawn between terminal voltage V_t and load current I_L. We know that terminal voltage $V_t = E_g - I_a R_a$. As the load on the generator increases, the armature voltage drop (I_aR_a drop) increases, this result in decrease in terminal voltage (V_t) from rated value as shown in figure. The External characteristics always lie below the Internal characteristics.

Characteristics of Shunt Generator:

No load or Open Circuit Characteristic (O.C.C.): This curve shows the relation between the generated e.m.f. at no-load (E_0) and the field current (I_f) at a constant speed. It is also known as magnetic characteristic or no-load saturation curve. The data for O.C.C. curve are obtained experimentally by operating the generator at no load and constant speed and recording the change in terminal voltage as the field current is varied. The O.C.C. of a d.c. shunt generator is plotted between E_0 and I_f as shown in the figure.

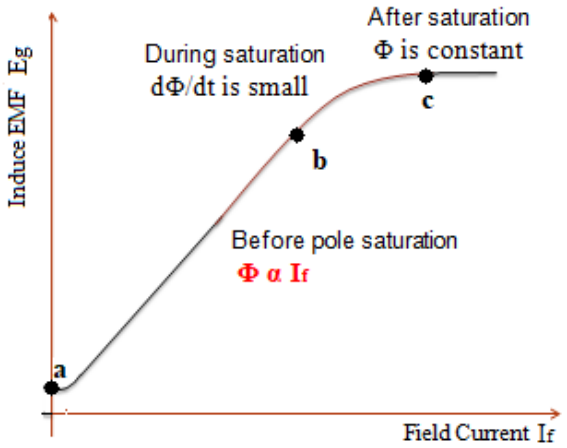

No load or OCC

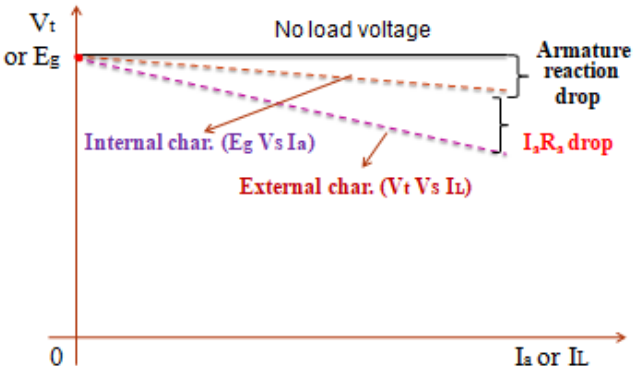

Load characteristics

Load Characteristic:

The load characteristics of DC shunt generator are classified as Internal characteristics and External characteristics.

Internal characteristics:

Internal characteristics are drawn between the generated e.m.f. on load (E_g) and the armature current (I_a). When the generator is loaded, the flux per pole is reduced due to armature reaction. Therefore, e.m.f. generated (E_g) on load is less than the e.m.f. generated (E_0) at no load. As a result, the internal characteristic (E_g Vs I_a) falls slightly as shown in the figure.

External characteristics:

The External characteristics are drawn between terminal voltage V_t and load current I_L. We know that terminal voltage $V_t = E_g - I_a R_a$. As the load on the generator increases, the armature voltage drop (I_aR_a drop) increases, this result in decrease in terminal voltage (V_t) from rated value as shown in fig. The External characteristics always lie below the Internal characteristics. The load characteristics of a DC Shunt Generator are called *Drooping characteristics*.

These are used for

(i) Ordinary lighting and power supply purposes.

(ii) Charging batteries because their terminal voltages are almost constant.

(iii) Giving excitation to the alternator.

Characteristics of Series Generator:

No load Open Circuit Characteristic (O.C.C.):

The open circuit characteristics are drawn between the generated e.m.f. at no-load (E_0) and the field current (I_f) at a constant speed. It is also known as magnetic characteristic or no-load saturation curve. The data for O.C.C. curve are obtained experimentally by operating the generator at no load and constant speed and recording the change in terminal voltage as the field current is varied. The O.C.C. of a DC series generator is plotted between E_0 and I_f as shown in the figure.

Load Characteristic:

The load characteristics of DC series generator is classified as Internal characteristics and External characteristics.

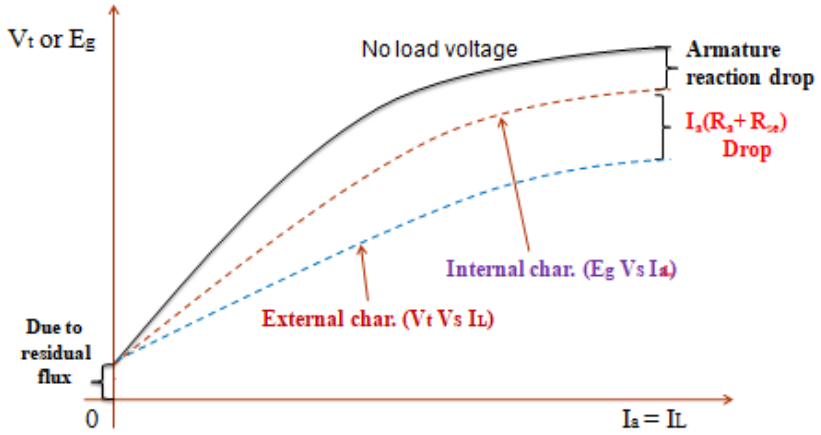

Internal characteristics:

Internal characteristics are drawn between the generated e.m.f. on load (E_g) and the armature current (Ia). When the generator is loaded, the flux per pole is reduced due to armature reaction. Therefore, e.m.f. generated (E_g) on load is less than the e.m.f. generated (E_0) at no load. Consequently, an internal characteristic curve lies below the O.C.C. curve as shown in the figure.

External characteristics:

The External characteristics are drawn between terminal voltage V_t and load current I_L or I_a or I_{se}. We know that terminal voltage $V_t = E_g - I_a (R_a + R_{se})$. As the load on the generator increases, the armature voltage drop $I_a (R_a + R_{se})$ increases, this result in a decrease in terminal voltage (V_t). Therefore the External characteristics always lie below the Internal characteristics. The load characteristics of a DC Series Generator are called *rising characteristics*.

These are used as

(i) Used as voltage boosters in railway service.

(ii) Used for producing the lighting by producing the arc.

(iii) Supplying field excitation current in DC locomotives

Characteristics of compound Generator:

Based on the series field and shunt field flux directions, the compound generators (both long shunt and short shunt compound generators) are classified as two types.

(i) Cumulative compound generator
(ii) Differential compound generator

➔If the series field flux and shunt field flux directions are same, as shown below, the type of generator is cumulative compound generator.



➔If the series field flux and shunt field flux directions are opposite to each other, as shown below, the type of generator is differential compound generator.

Load Characteristics:

In differential compounded generators, the terminal voltage drops very quickly with increasing armature current as shown in the below figure.

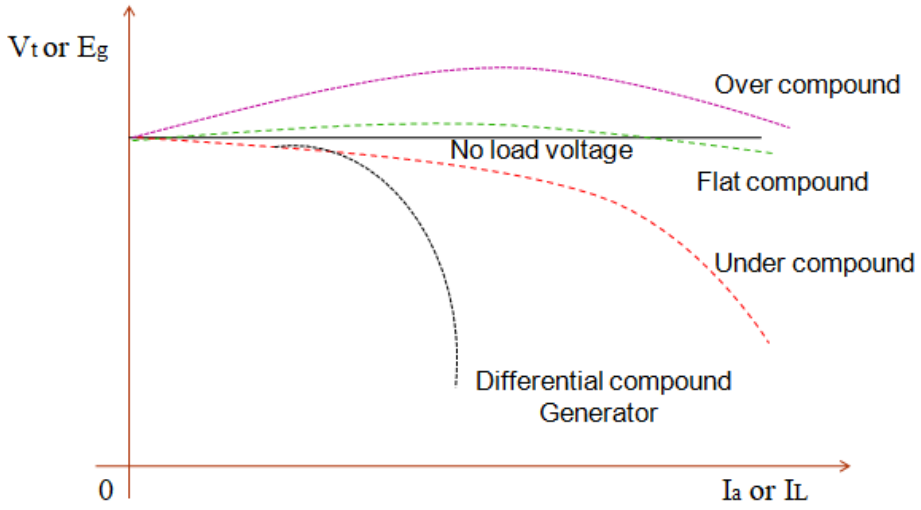

In cumulative compounded generators,

* If the terminal voltage of the generator at load is higher than the no-load terminal voltage, it is called **Over compounded** characteristics.
* If the terminal voltage of the generator at full load is equal to the no-load terminal voltage, it is called **Flat compounded (or) Level compounded** characteristics.
* If the generator terminal voltage at full load is less than the no-load terminal voltage, it is called **Under compounded** characteristics.

Conditions for voltage build up in DC Generator: The conditions for voltage build up in dc generator are i) There should be residual magnetism.

ii) Give the proper field winding connections.

iii) The Critical resistance of field winding (**Rc**) should more than field resistance (**Rsh**) i.e **Rc > Rsh.**

iv) The critical speed (**Nc**) should be less than the generator rated speed i.e **Nc < Nrated.**

A shunt generator delivers 450A at 230V and resistance of shunt field and armature are 50Ω and 0.03Ω respectively. Calculate the generated *emf*.

Given that

Shunt generator delivers 450A at 230V

i.e Load current $I_L = 450A$ and $V_t = 230V$

Shunt field resistance $R_{sh} = 50\Omega$

Armature resistance $R_a = 0.03\Omega$

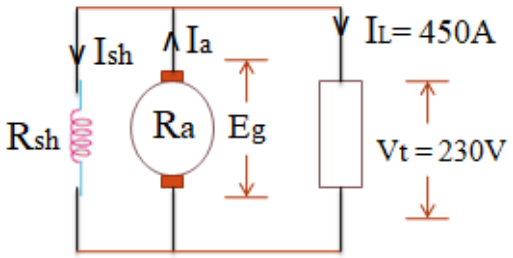

From diagram,

Shunt field current $I_{sh} = \frac{V_t}{R_{sh}} = \frac{230}{50} = 4.6A$

Armature current $I_a = I_L + I_{sh} = 450 + 4.6 = \mathbf{454.6A}$

Generated EMF, $E_g = V_t + I_a R_a + B.D = 230 + 454.6*0.03 = \mathbf{243.6V}$

Example. *A long-shunt compound generator delivers a load current of 50 A at 500 V and has armature, series field and shunt field resistances of 0.05 Ω, 0.03 Ω and 250 Ω respectively. Calculate the generated voltage and the armature current. Allow 1 V per brush for contact drop.*

Given that

Long Shunt compound generator delivers 450A at 230V i.e Load current $I_L = 450A$ and $V_t = 230V$

Armature resistance $R_a = 0.05\Omega$

Series field resistance $R_{se} = 0.03\Omega$

Shunt field resistance $R_{sh} = 250\Omega$

1 volt per brush for contact drop

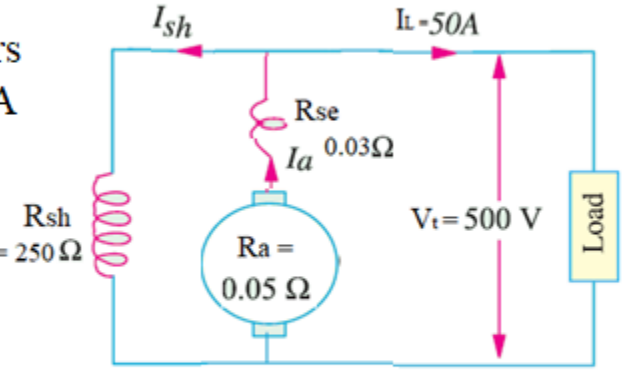

From diagram, Shunt field current $I_{sh} = \frac{V_t}{R_{sh}} = 500/250 = 2\ A$

Armature current $I_a = I_L + I_{sh} = 50 + 2 = 52\ A = I_{se}$

Generated EMF, $E_g = V_t + I_a R_a + I_{se} R_{se} + B.D$

$= 500 + 52*0.05 + 52*0.03 + 2 = \mathbf{506.16\ V}$

An 8-pole d.c. shunt generator with 778 wave-connected armature conductors and running at 500 r.p.m. supplies a load of 12.5 Ω resistance at terminal voltage of 250 V. The armature resistance is 0.24 Ω and the field resistance is 250 Ω. Find the armature current, the induced e.m.f. and the flux per pole.

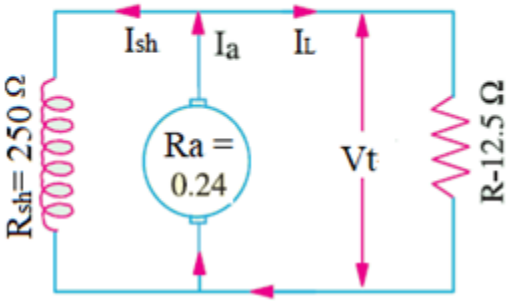

From diagram,

Shunt field current $I_{sh} = \frac{Vt}{Rsh} = \frac{250}{250} = 1A$

Load current $I_L = \frac{Vt}{RL} = \frac{250}{12.5} = \mathbf{20A}$

Armature current = 20 + 1 = **21 A**

Generated EMF, $E_g = V_t + I_a R_a + B.D = 250 + (21 \times 0.24) = \mathbf{255.04\ V}$

we know $E_g = \frac{\Phi ZN}{60} \times \left(\frac{P}{A}\right)$

$\therefore \quad 255.04 = \frac{\Phi \times 778 \times 500}{60}\left(\frac{8}{2}\right)$ ➡ flux/pole Φ = **9.83 mWb**

Uses of D.C. Generators

1. Shunt generators: These are used for

(i) Ordinary lighting and power supply purposes.

(ii) Charging batteries because their terminal voltages are almost constant.

(iii) Giving excitation to the alternator.

2. Series generators: These are used as

(i) Boosters in certain types of distribution systems particularly in railway service.

(ii) Used for producing the lighting by producing the arc.

(iii) Supplying field excitation current in DC locomotives

3. Compound generators: The ***cumulatively-compound generator*** is the most widely used d.c. generator because its external characteristic can be adjusted for compensating the voltage drop in the line resistance. Hence, such generators are used for motor driving which requires d.c. supply at a constant voltage, for lamp loads and heavy power service such as electric railways.

The ***differential-compound generator*** has an external characteristic similar to that of a shunt generator but with a large demagnetization armature reaction. Hence, it is widely used in arc welding where a larger voltage drop is desirable with the increase in current.

Back EMF & its significance:

When a current carrying conductor (Armature winding) is placed in a magnetic field, torque develops and conductor (Armature) rotates the armature conductors cut the magnetic field and an *emf* is induced across the armature conductors. The direction of induced *emf* is opposite to the applied voltage. That is why this induced *emf* is called back emf (E_b) and the magnitude of the back emf is (E_b) = $\frac{\Phi ZN}{60}.\frac{P}{A}$

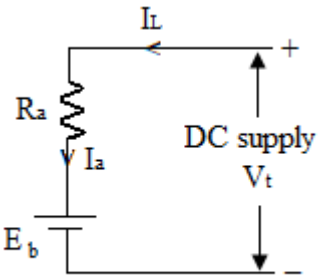

Figure (3)

The equivalent circuit of dc motor is as shown in fig. (3). From the diagram the armature current (I_a) = $\frac{Vt - Eb}{Ra}$. The main significance of the back emf is when the back emf is zero, the armature current may be 4 to 5 times the normal current. When the back emf is increases, the armature current is limited to its normal current i.e the back emf acts as *safety valve*.

Types of D.C. Motors:

DC Motors are generally classified into three groups according to their field excitation. Those are

(i) DC Shunt Motor (ii) DC Series Motor (iii) DC Compound Motor

DC Shunt Motor:

In a DC Shunt Motor, the field winding is connected in parallel with the armature winding as shown in fig (5). The shunt field winding has *many turns* of *thin* wire having high resistance. Therefore, a part of armature current flows through shunt field winding and the remaining current flows through the load.

From the diagram

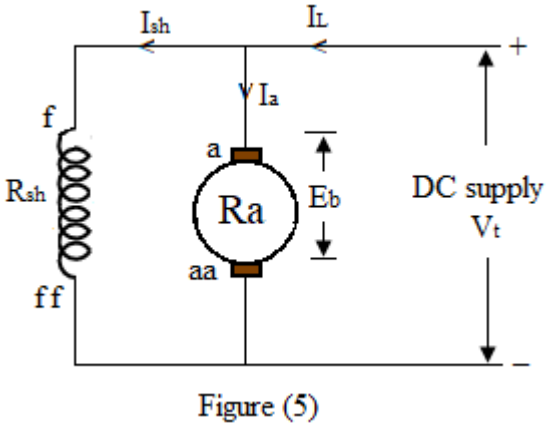

Figure (5)

Shunt field current $I_{sh} = V_t / R_{sh}$

Supply current $I_L = I_a + I_{sh}$ (or) $I_a = I_L - I_{sh}$

Terminal voltage $V_t = E_b + I_a R_a + B.D$

Back (or) Counter EMF $E_b = V_t - I_a R_a - B.D$

Power developed in armature = Eg Ia

Input power = $V_t I_L = V_t (I_a - I_{sh})$

Where I_a = Armature current, R_a = Armature Resistance, V_t = Terminal voltage, I_L = Load current

DC Series Motor:

If the field winding is connected in series with armature winding as shown in fig.(6) is called DC Series Motor. The series field winding has a *few turns* of *thick* having low resistance.

From the circuit, Armature current = $I_a = I_{se} = I_L$

Terminal voltage, $V_t = E_b + I_a R_a + I_{se} R_{se} + B.D$

$= E_b + I_a (R_a + R_{se}) + B.D$

Back (or) Counter EMF $E_b = V_t - I_a (R_a + R_{se}) - B.D$

Power developed in armature = Eb Ia

In put Power = $V_t I_L = V_t I_a$ (since $I_a = I_L$)

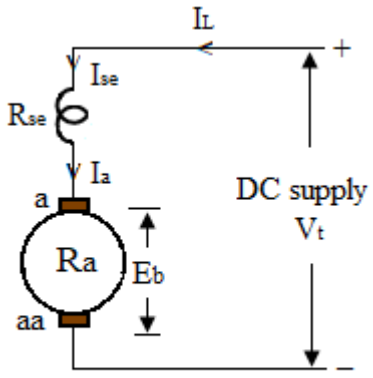

Figure (6)

Where I_a = Armature current, R_a = Armature Resistance,

V_t = Terminal voltage, I_L = Load current

DC Compound Motor:

In a DC compound motor, there are two sets of field windings on each pole, one is in series with the armature and the other in parallel with the armature. Based on these field winding connections, the DC compound moors are classified into

(i) Long shunt compound motor (ii) Short shunt compound motor

Long shunt compound motor:

In a Long Shunt Compound motor, the shunt field winding is in parallel with both series field and armature winding as shown in fig. (7).

From the diagram

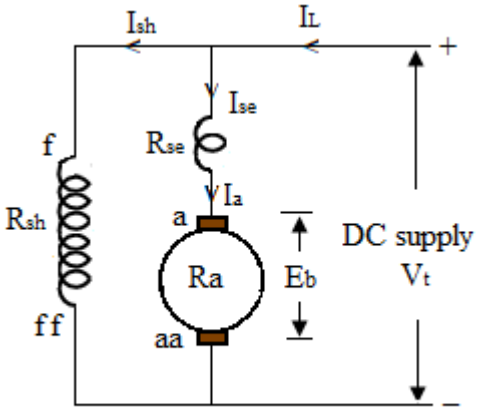

Figure (7)

Shunt field current $I_{sh} = V_t / R_{sh}$

Supply current $I_L = I_a + I_{sh}$ (or) I_a or $I_{se} = I_L - I_{sh}$

Terminal voltage $V_t = E_b + I_a R_a + I_{se} R_{se}) + B.D$

Back (or) Counter EMF $E_g = V_t - I_a R_a - I_{se} R_{se} - B.D$

$= V_t - I_a (R_a + R_{se}) - B.D$

Power developed in armature = Eb Ia

Input Power = $V_t I_L = V_t (I_a + I_{sh})$

Where I_a = Armature current, R_a = Armature Resistance, V_t = Terminal voltage, I_L = Load current

Short shunt compound motor:

In a Short Shunt Compound motor, the shunt field winding is connected in parallel with armature winding only as shown in fig. (8).

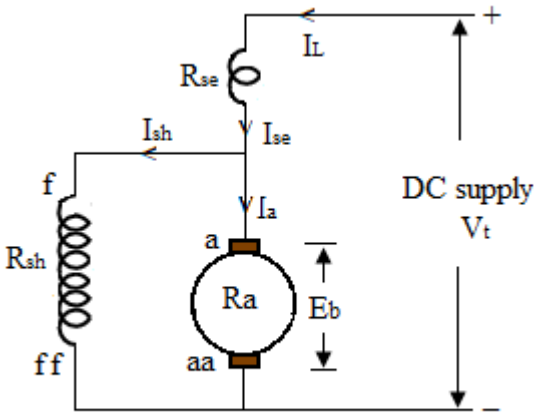

Figure (8)

From the diagram, Armature current $I_a = I_{se} - I_{sh}$

Series field current $I_{se} = I_L = I_a + I_{sh}$

Terminal voltage $V_t = E_b + I_a R_a + I_{se} R_{se}$ + B. D

Back (or) Counter EMF $E_b = V_t - I_a R_a - I_{se} R_{se}$ - B. D

Power developed in armature = $E_b I_a$

Input Power = $V_t I_L$

Where V_t = Terminal voltage, I_L = Load current

I_a = Armature current, R_a = Armature Resistance

Armature Torque (T_a) Equation of D.C. Motor:

Torque is defined as '*turning and twisting movement of force about an axis'*. Mathematically, Torque can be defined as product of force and the radius at which the force is act i.e T = F**r*.

Let a pulley with a radius of ' *r* ' is rotating with a speed of N rpm when a force of F newtons is applied. Then

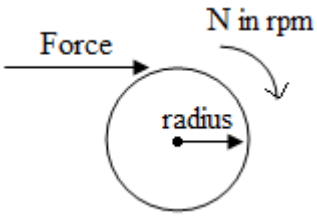

Work done by the force = Force * Distance

= F * 2 π *r* joules

Power developed = Work done / time [N = no. of revolutions/min, no. of revolutions/sec = N/60]

$= F * 2\pi r /(60/N)$

$= (F * r)\, 2\pi\, 60/N$

$= 2\pi N T/60$ watts

If the torque developed by the motor is T_a ,

The Power developed in armature (P_a) $= 2\pi N T_a /60$ watts ---------- (1)

But Power developed in armature (P_a) $= E_b I_a$ ---------- (2)

From equations (1) & (2), $2\pi N T_a /60 = E_b I_a$

$$\text{Armature torque } T_a = \frac{E_b I_a}{2\pi N/60} = \frac{I_a}{2\pi \cancel{N}/\cancel{60}} * \frac{\phi Z \cancel{N}}{\cancel{60}} . \frac{P}{A} \quad (\text{bcz } E_b = \frac{\phi Z N}{60} . \frac{P}{A})$$

$$T_a = \frac{1}{2\pi} * \phi Z I_a \frac{P}{A}$$

$$\text{Armature torque } T_a = 0.159\, \phi Z I_a \frac{P}{A}$$

Shaft Torque (T_{sh}): A part of armature torque is lost as Iron & Mechanical losses, the remaining torque is available at shaft of the motor, this torque is called shaft torque (T_{sh}). Practically, shaft torque (T_{sh}) is less than armature torque (T_a).

Unit of mechanical power is Horse Power (HP). 1 H.P = 745.7wattes ≈ 746watts.

$$\text{Shaft torque } (T_{sh}) = 9.55 \frac{\text{Output Power (watts)}}{N}$$

Prob: A 250V, 4 pole, wave wound DC series motor has 782 conductors on its armature. It has armature and series field resistance of 0.75Ω. The motor takes a current of 40A. Estimate the speed and gross torque developed if it has a flux/pole is 25*m*Wb.

Sol: Given that Supply voltage $V_t = 250V$, No. of poles(P) = 4, No. of conductors, Z = 782,

Flux/pole $\phi = 25mwb$, The armature and series field resistance i.e $R_a + R_{se} = 0.75\Omega$

Motor take current i.e armature current $I_a = I_{se} = 40A$

From the diagram $E_b = V_t - I_a (R_a + R_{se}) = 250 - 40*0.75 = 220V$

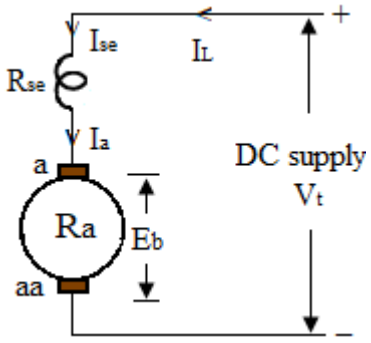

We have back emf is $(E_b) = \frac{\Phi ZN}{60}.\frac{P}{A}$

$$220 = \frac{25*10^{-3}.782.N}{60}.\frac{4}{2}$$

$\therefore$ Speed (N) =**1450.5rpm**

Torque established $T_a = 0.159\phi ZI_a (P/A)$

$= 0.159*25x10^{-3}*782*40*(4/2) =$ **249Nm**

Prob: Determine the torque established by the armature of a 4 pole DC motor having 774 conductors, two paths in parallel, 24*m*wb of pole flux and armature current is 50A.

Sol: Given that, No. of poles, P = 4, No. of conductors, Z = 774, flux/pole ϕ = 24*m*wb

Two paths in parallel means a wave winding, Armature current I_a 50A

Now Torque established $T_a = 0.159\phi ZI_a (P/A) = 0.159*24x10^{-3}*774*50*(4/2) =$ **296.36Nm**

Prob: A 4 pole, 220V shunt motor has 540 lap wound conductors. It takes 32A from the supply mains and develops output power of 7.5HP. The field winding takes 1A. The armature resistance is 0.09Ω and the flux/pole is 30*m*Wb. Calculate torque developed and lost torque.

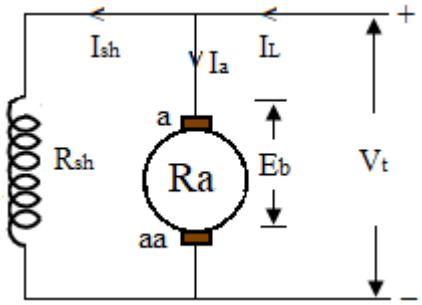

Sol. Armature current $I_a = I_L - I_{sh} = 32 - 1 = 31$ A

Back emf $= E_b = V - I_a R_a = 220 - (0.09 \times 31) = 217.2\ V$

$$\text{But, Back emf} = E_b = \frac{\Phi ZN}{60}\left(\frac{P}{A}\right)$$

$$\therefore \quad 217.2 = \frac{30 \times 10^{-3} \times 540 \times N}{60}\left(\frac{4}{4}\right)$$

$\therefore$ Speed N = **804.4 r.p.m.**

Shaft torque $T_{sh} = 9.55 \frac{\text{Output power in watts}}{\text{Speed (N)}} = 9.55.\frac{5595}{804.4} =$ **66.5Nm**

Armature torque Ta = $0.159\phi ZIa(P/A) = 0.159*30x10^{-3}*540*31*(4/4) =$ **79.85 Nm**

Lost torque (TL) = Ta – Tsh = 79.85 – 66.5 = **13.35Nm**

D.C. Motor Characteristics:

The performance of a d.c. motor can be judged from its characteristic curves known as motor characteristics, following are the three important characteristics of a d.c. motor:

(i) *Torque and Armature current characteristic (Ta/Ia):* It is the curve between armature torque Ta and armature current Ia of a d.c. motor. It is also known as electrical characteristic of the motor.

(ii) *Speed and armature current characteristic (N/Ia):* It is the curve between speed N and armature current Ia of a d.c. motor. It is very important characteristic in the selection of the motor for a particular application.

(iii) *Speed and torque characteristic (N/Ta):* It is the curve between speed N and armature torque Ta of a d.c. motor. It is also known as mechanical characteristic.

Characteristics of Shunt Motor:

The connections of a d.c. shunt motor is shown in below figure. The field current I_{sh} is constant since the field winding is directly connected to the constant supply voltage V_t. Hence, the flux in a shunt motor is constant (Φ □□□$_{sh}$).

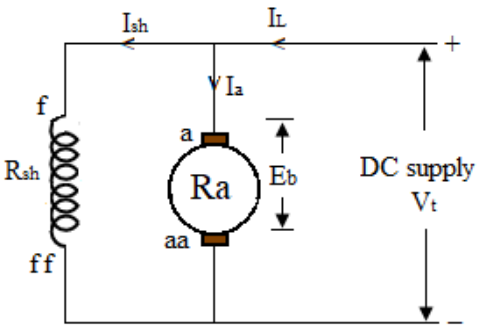

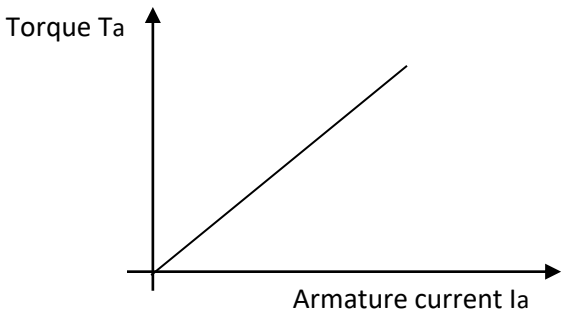

Ta Vs Ia Characteristics

(i) **Ta/Ia Characteristic:** We know that in a d.c. motor, Ta □□□□Ia. Since the motor is operating from a constant supply voltage, flux □□is constant. □□Ta □□Ia

Hence Ta/Ia characteristic is a straight line passing through the origin as shown in Figure. It is clear from the curve that a very large current is required to start a heavy load. Therefore, a shunt motor should not be started on heavy load.

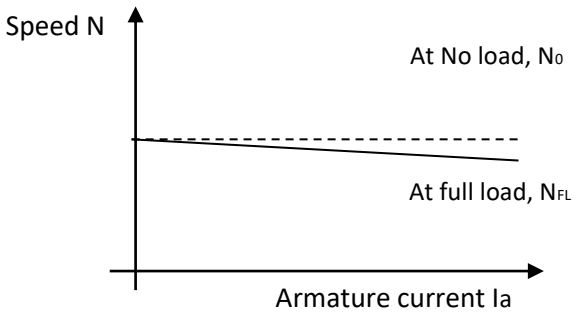

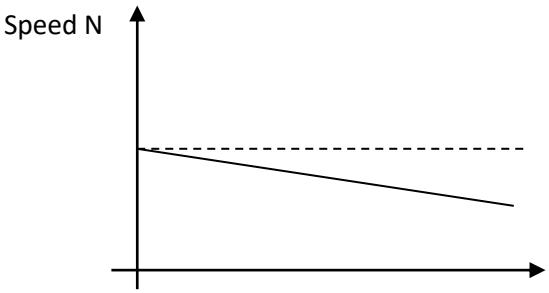

N Vs Ia Characteristics *N Vs Ta Characteristics*

(ii) **N/Ia Characteristic:** The speed N of a. d.c. motor is given by $N \alpha \frac{E_b}{\phi}$. The flux (□□□ in a shunt motor are almost constant under normal conditions. Therefore, speed of a shunt motor will remain constant as the armature current varies. But practically when load is increased, load current I_L and armature current I_a also increased (since $I_a = I_L - I_{sh}$). Therefore the back emf E_b (= Vt□□IaRa) decrease due to the armature resistance drop and results in slightly decrease in the speed of the motor.

(iii) **N/Ta Characteristic:** The curve is obtained by plotting the values of N and T_a for various armature currents. It may be seen that speed falls as the load torque increases as shown in N/Ta characteristics.

The DC shunt motors are used where the constant speed is required. Dc shunt motors are used **Lathe Machines, Centrifugal Pumps, Fans, Blowers, Conveyors, Lifts, Weaving Machine, etc.**

Characteristics of Series Motor:

The connections of a d.c. series motor is shown in below figure. From the circuit $I_L = I_{se} = I_a$. If the load on the motor increases, the armature current also increases. Hence, the flux in a series motor increases with the increase in armature current ($\Phi \square\square\square_f$) and vice-versa.

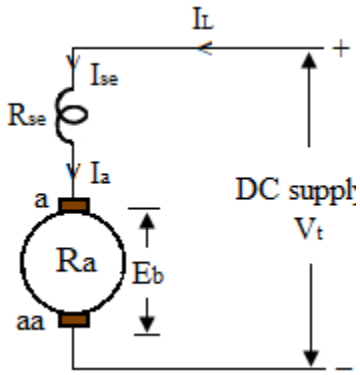

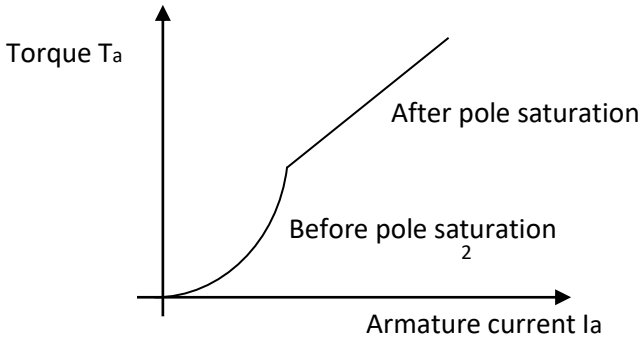

Ta Vs Ia Characteristics

(i) **Ta/Ia Characteristic**:

We know $T_a \square\square\square\square I_a$. Before pole saturation, $\square\square\square\square I_a$ so that $T_a \square\square I^2_a$ and after pole saturation, $\square\square$is constant so that $T_a \square\square I_a$. Therefore upto saturation, Torque Vs Armature current curve is a parabola and after saturation, torque is directly proportional to the armature current. Therefore, Ta/Ia curve after saturation is a straight line as shown in figure.

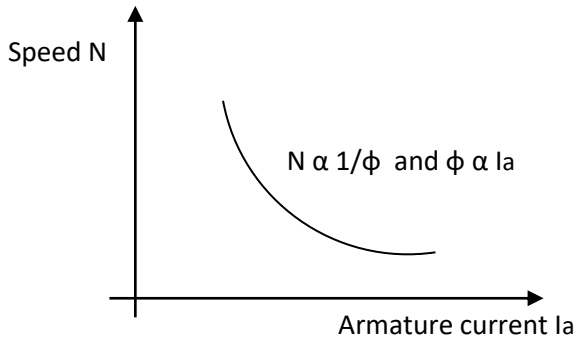

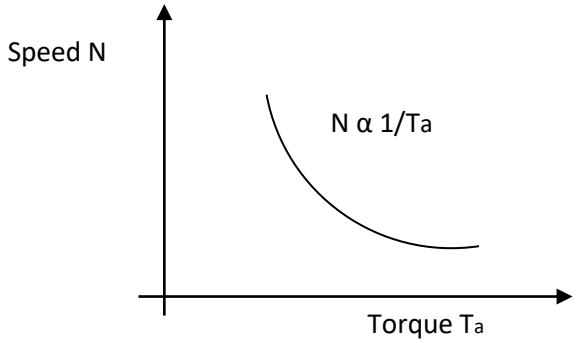

N Vs Ia Characteristics *N Vs Ta Characteristics*

(ii) **N/Ia Characteristic:**

The speed N of a. d.c. motor is given by $N \alpha \frac{E_b}{\phi}$. For constant back emf, speed $N \alpha \frac{1}{\phi}$ but the flux (Φ) □□field current ($I_{se} = I_a$). Therefore the speed $N \alpha \frac{1}{I_a}$. Thus, the Speed (N) Vs armature current (Ia) curve is hyperbolic as shown in Figure.

(iii) **N/Ta Characteristic**: The speed (N) Vs Torque (Ta) characteristic of a series motor is shown in *N Vs Ta Characteristics.*

DC series motors are used where high starting torque required. DC series motor is used in a **vacuum cleaner**, **traction systems**, **sewing machines**, **cranes**, **air compressors** etc.

Example. *A d.c. motor takes an armature current of 110 A at 480 V. The armature circuit resistance is 0.2 Ω. The machine has 6-poles and the armature is lap-connected with 864 conductors. The flux per pole is 0.05 Wb. Calculate (i), the speed and (ii) the gross torque developed by the armature.*

Solution. Back emf $E_b = V_t - I_a R_a = 480 - 110 \times 0.2 = 458$ V,

$\Phi = 0.05$ W, $Z = 864$

$$E_b = \frac{\Phi ZN}{60}\left(\frac{P}{A}\right) \text{ or } 458 = \frac{0.05 \times 864 \times N}{60} \times \left(\frac{6}{6}\right)$$

$N = 636$ r.p.m.

$T_a = 0.159 \times 0.05 \times 864 \times 110\ (6/6) = 756.3$ N-m

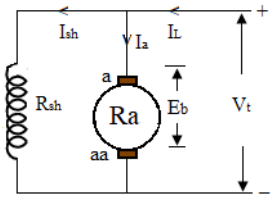

Prob: A 4 pole, lap wound DC motor has 782 conductors on its armature. At no load, the back emf is 225V. Estimate the speed regulation of the motor, if it has a flux/pole is 25*m*Wb and its full load speed is 675rpm.

Sol: Given that No. of poles (P) = 4, No. of conductors (Z) = 782, Flux/pole (ϕ) = 25mWb.

At no load, the back emf is 225V i.e (E_b) = $\frac{\Phi ZN}{60}.\frac{P}{A}$

$$225 = \frac{25*10^{-3}.782.N}{60}.\frac{4}{4} \rightarrow \text{Speed (N)} = \mathbf{690.54rpm}$$

$$\% \text{ Speed regulation} = \frac{N_0 - N_{FL}}{N_{FL}}.100 = \frac{690.54 - 675}{675}.100 = \mathbf{2.3\%}$$

UNIT II : Starting, Speed Control and Testing of DC Machines

Syllabus: Losses and efficiency, necessity of a starter – starting by 3-point starter – speed control by armature voltage and field current control–testing of DC machines–Brake test, Swinburne's test – Hopkinson's test – Field's Test.

Losses & Efficiency of a D.C. Machine:

Losses of a D.C. Machine: The losses in a DC machine (generator or motor) are divided into three types. Those are

(i) copper losses (ii) iron or core losses and (iii) mechanical losses.

Copper losses: The copper losses occur due to winding resistance and are directly proportional to square of the current passing through the winding. Copper losses due to currents in the various windings of the machine are

(i) Armature copper loss = $I_a^2 R_a$; Where I_a is the armature current and R_a armature resistance.

(ii) Shunt field copper loss = $I_{sh}^2 R_{sh}$; Where I_{sh} is the shunt field current and R_{sh} shunt field resistance.

(iii) Series field copper loss = $I_{se}^2 R_{se}$; Where I_{se} is the series field current & R_{se} series field resistance.

The shunt field copper losses are called as constant losses because the current through the shunt field winding is constant. But the armature copper losses and series field copper losses are depends on the load on the motor, so these losses are called as variable losses. Practically, the contribution of armature copper losses is 30 to 40% of its full load losses and the contribution of field copper losses is 20 to 30% of its full load losses.

Iron or Core losses: These losses occur in the armature of a d.c. machine and are due to the rotation of armature in the magnetic field of the poles. They are of two types (i) Hysteresis loss (ii) Eddy current loss.

Hysteresis loss: The Hysteresis loss are represented by, $P_h = K_h B_m^{1.6} f V$ watts

Where B_m = Maximum flux density in armature, f = Frequency, V = Volume of armature in m^3

K_h = Steinmetz hysteresis co-efficient

In order to reduce this loss in a D.C. machine, pole and armature core are made with silicon steel material, because the silicon steel material has a low value of Steinmetz hysteresis co-efficient.

Eddy current loss: The Eddy current loss are given by, $P_e = K_e B_m^2 f^2 t^2 V$ watts

Where Ke = Constant, Bm = Maximum flux density in Wb/m^2, f = Frequency, t = Thickness of lamination in mts and V = Volume of core in m^3

Eddy current losses can be reduced by laminating the armature core and pole core.

The contribution of *Iron* losses is 20 to 30% of its full load losses.

Mechanical losses:

These losses are due to friction and windage effects. Mechanical losses are classified into two classes, those are

(i) Friction loss (These losses are due to friction at bearings and brushes)

(ii) Windage loss (These losses are due air friction of rotating armature).

These losses depend upon the speed of the machine. But for a given speed, they are practically constant.

These losses are about 10 to 20% of full load losses.

The sum of Iron and Mechanical losses is called as *Stray losses*. The copper loss depends on load or load current, so the copper losses are called as *variable losses*. The sum of Stray losses and Shunt field copper losses are called as *constant losses*. Therefore the total losses are the sum of constant losses and variable losses.

Efficiency of a D.C. Machine: The power stage diagram of a DC Machine is as shown in below figure.

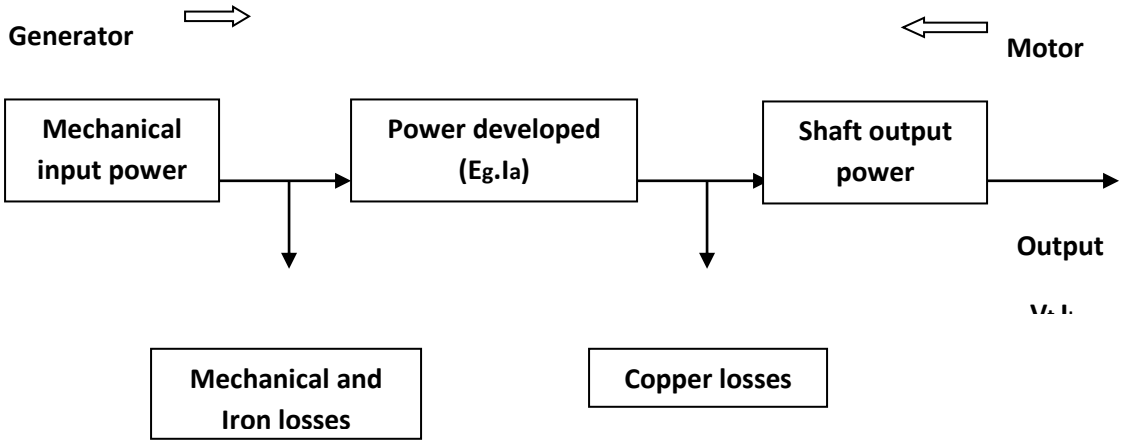

For DC Generator:

The efficiency of a DC Generator is not constant but varies with load. Consider a DC generator delivering a load current I_L at a terminal voltage V_t .

Generator output = $V_t I_L$

Generator input = Output + Losses = $V_t I_L$ + Variable losses + Constant losses

$= V_t I_L + I_a^2 R_a + P_i$

$= V_t I_L + (I_L + I_{sh})^2 R_a + P_i$ ($\because I_a = I_L + I_{sh}$)

$$\% \text{ Generator Effiency } (\eta_g) = \frac{\text{Output power}}{\text{Input power}} * 100 = \frac{V_t I_L}{V_t I_L + (I_L + I_{sh})^2 R_a + P_i} * 100$$

For DC Motor:

The efficiency of a DC Motor is not constant but varies with load. Consider a DC motor taking a current I_L at voltage V_t .

Motor Input = $V_t I_L$

Motor Output = Input - Losses = $V_t I_L$ - Variable losses - Constant losses

$= V_t I_L - I_a^2 R_a - P_i$

$= V_t I_L - (I_L - I_{sh})^2 R_a - P_i$ (Since $I_a = I_L - I_{sh}$)

$$\% \text{ Motor Effiency } (\eta_m) = \frac{\text{Output power}}{\text{Input power}} * 100 = \frac{V_t I_L}{V_t I_L - (I_L - I_{sh})^2 R_a - P_i} * 100$$

Example 29.44. *A 6-pole, 500-V wave-connected shunt motor has 1200 armature conductors and useful flux/pole of 20 mWb. The armature and field resistance are 0.5 Ω and 250 Ω respectively. Neglect armature reaction. If magnetic and mechanical losses amount to 900 W, when it draws 20 A from the supply find (i) useful torque (ii) output in kW and (iii) efficiency at this load.*

Given that Supply voltage V_t = 500V, No. of poles(P) = 6, No. of conductors, Z = 1200, wave wound

Flux/pole ϕ = 20*m*wb, Armature resistance R_a = 0.5Ω and shunt field resistance R_{sh} = 250Ω

Motor take current i.e armature current I_L = 20A;

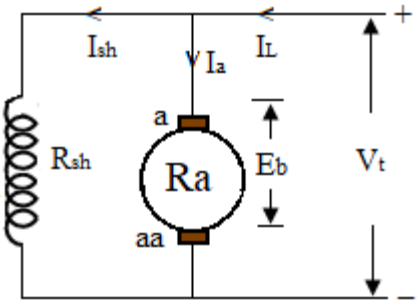

Shunt field current $I_{sh} = \frac{Vt}{Rsh} = \frac{500}{250} = 2A$

Armature current $I_a = IL - Ish = 20 - 2 = 18A$

From the diagram $E_b = V_t - I_a R_a = 500 - 18*0.5 = 491V$

we have back emf is $(E_b) = \frac{\Phi ZN}{60}.\frac{P}{A}$

$$491 = \frac{20*10^{-3}.1200.N}{60}.\frac{6}{2}$$

$\therefore$ Speed (N) =**410rpm**

Armature copper losses = $Ia^2.Ra = 18^2 . 0.5 = 162W$; Field copper losses = $I_{sh}^2.R_{sh} = 2^2 . 250 = 1000W$

Iron and Mechanical losses = 900W, $\therefore$ Total losses = 162 + 1000 + 900 = 2062W

Output power = Input power – losses = $V_t I_L$ – losses = 500*20 – 2062 = 7938W = 7.938KW

Usefull torque or Shaft torque $T_{sh} = 9.55\frac{\text{Output power in watts}}{\text{Speed (N)}} = 9.55.\frac{7938}{410} = 184.8$**Nm**

$$\%\,\eta = \frac{\text{Output}}{\text{Input}} \times 100 = \frac{7,938 \times 100}{10,000} = 0.794 = 79.4\%$$

Prob: The armature winding of a 4 pole, 250V DC shunt motor is lap connected. There are 120 slots, each slot has 8 conductors. The flux per pole is 20*m*Wb and current taken by the motor is 25A. The resistance of armature and field circuit are 0.1Ω and 125Ω respectively. If the rotational and iron losses are 810W, find the gross and useful torques at speed 775rpm. Also find the efficiency.

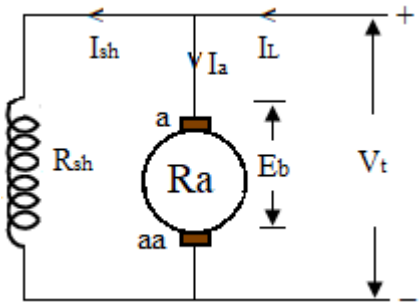

Given that

Supply voltage $V_t = 250V$, No. of poles(P) = 4, No. of conductors,

Z = 120*8 = 960, Lap wound

Flux/pole ϕ = 20*m*wb, Armature resistance $R_a = 0.1\Omega$ and shunt field resistance $R_{sh} = 125\Omega$

Motor take current i.e armature current $I_L = 25A$;

Shunt field current $I_{sh} = \frac{Vt}{Rsh} = \frac{250}{125} = 2A$

Armature current $I_a = IL - Ish = 25 - 2 = 23A$

Armature Torque $= 0.159.\ \phi\ .Z.Ia.\ \frac{P}{A} = 0.159*20*10^{-3}*960*23*\frac{4}{4}$

$= 70.4$ Nm

Shunt Cu loss $= 250 \times 2 = 500$ W
Arm Cu loss $= 23^2 \times 0.1 = 53$ W;

Rotational losses = 810 W; Total motor losses = 810 + 500 + 53 = 1363 W
Motor input = 250 × 25 = 6250 W; Motor output = 6250 – 1363 = 4887 W
$T_{sh} = 9.55 \times$ output/$N = 9.55 \times 4887/773 = 60.4$ N-m
Efficiency = 4887/6250 = 0.782 = 78.2%

Speed Control of DC Motor:

The **speed of a DC motor** (N) $\alpha\ \frac{E_b}{\phi}\ \alpha\ \frac{V - I_a R_a}{\phi}$. Therefore the speed of the DC motor can be controlled by changing the quantities (i) The terminal voltage of the armature (V), (ii) The external resistance in armature circuit (R_a) and (iii) The flux per pole (ϕ). Terminal voltage and external resistance involve a change that affects the armature circuit, while flux involves a change in the magnetic field. Therefore **speed control of DC motor** can be classified into:

1) Armature Control Method 2) Field or flux Control Method

Speed Control of DC Shunt Motor:

Armature Control:

This is the most commonly used speed control method. Here the variable resistance (**R**) is connected directly in series with the armature of the motor as shown in the below figure. The variation in the variable resistance does not affect the flux because the field winding is directly connected to the supply.

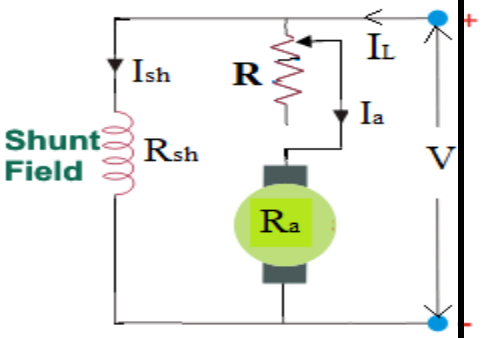

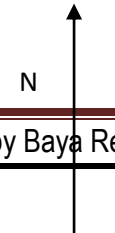

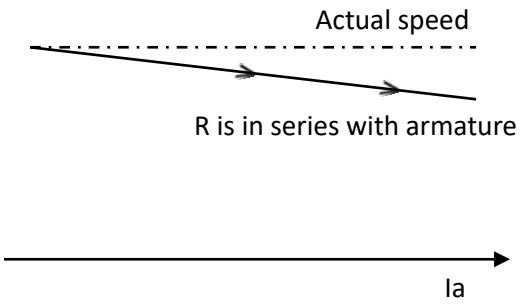

Armature control Speed (N) Vs armature current (I_a) characteristics

Initially the variable resistor kept in minimum position. The **speed of a DC motor** (N) α $\frac{E_b}{\phi}$ α V - I_aR_a since the flux is constant. Now by increasing the variable resistance (R) from minimum to maximum position, since I_aR_a drop also increases, the speed of the shunt motor decreased from actual speed to minimum speed as shown in speed (N) Vs armature current (I_a) curves. From the characteristics, it is clear that the armature resistance control will gives always below the actual speeds only.

Advantages of armature control method:

1. Smooth speed control is possible hence the speed regulation is good.
2. Below actual speeds is possible.

Disadvantages of armature control method:

1. This method gives always below the actual speeds only.
2. Less efficient method because more power wastage in control resistance (R) due to armature current. 3. It needs expansive arrangement for dissipation of heat whose cost is more.

Field or flux Control Method:

In this method, a variable resistance is connected in series with the shunt field winding as shown in figure.

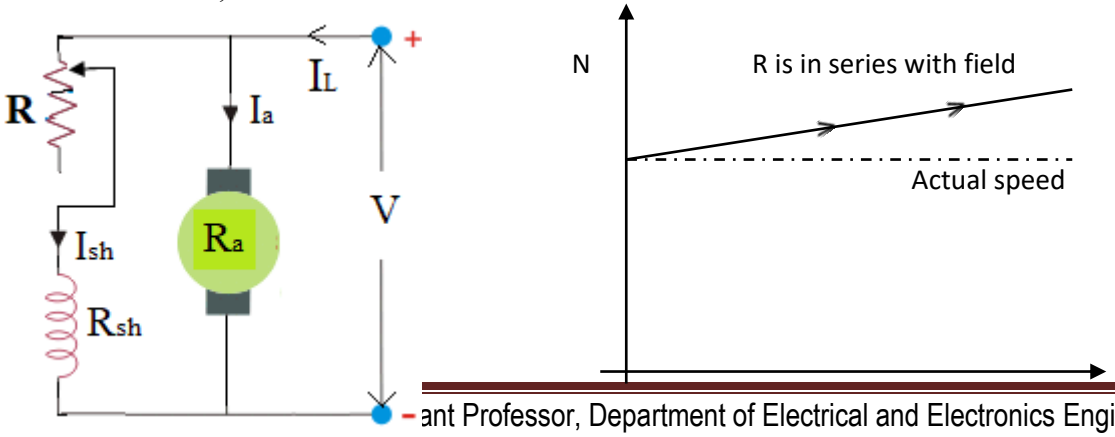

flux

Armature control Speed (N) Vs Flux characteristics

Initially the variable resistor kept in minimum position. The **speed of a DC motor** (N) $\alpha 1/\phi$. Now by increasing the variable resistance (R) from minimum to maximum position, the speed of the shunt motor will increased from actual speed as shown in speed (N) Vs armature torque (T_a) curves. Because when the variable resistance is increased, the flux (ϕ) and Torque (T_a) will decrease. This results in increase in motor speed from its actual speed. From the characteristics, it is clear that the flux or field control will gives always above actual speeds only.

Advantages flux control method:

1. Above actual speeds are possible.
2. More efficient method because less power is wasted in control resistance (R) due to less field current.
3. This method speed control is easy and convenient to conduct.

Disadvantages of flux control method:

1. Below actual speeds are not possible.
2. It is applicable to limited range of speed control only because of pole saturation.
3. Commutation becomes unsatisfactory.

Speed Control of DC Series Motor:

i) Field diverter method: In this method, a variable resistance R is connected in parallel with the field winding as shown in figure. With this connection, a part of current I_d will flows through diverter and current flowing through the field winding is reduced which reduces the flux (ϕ). Consequently, the speed of the motor is increased since Speed N α 1/ϕ.

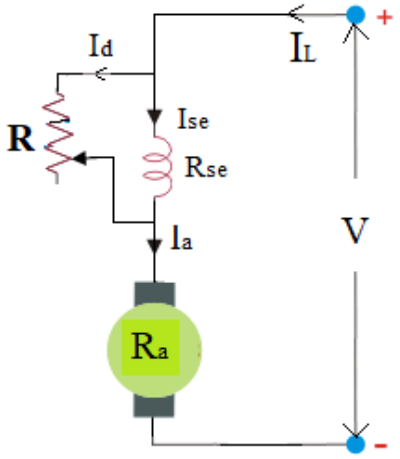

Field diverter method

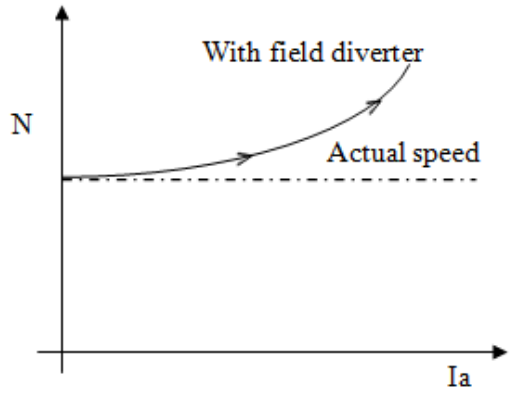

Speed (N) Vs armature current (I_a) characteristics

The variation in speed w.r.t armature (or) field current is as shown in speed Vs field current characteristics. From the characteristics, it is clear that only above the actual seed can be obtained.

ii) Armature diverter method: In this method, a variable resistance R is connected in parallel with the armature as shown in figure. With this connection, a part of current I_d will flows through diverter and current flowing through the armature is reduced which reduces the flux (ϕ). Consequently, the speed of the motor is increased since Speed N α 1/ϕ.

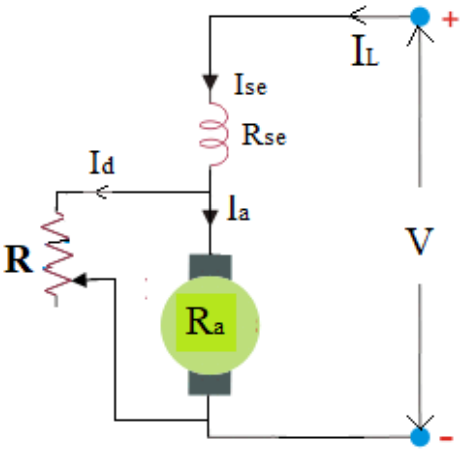

Armature diverter method

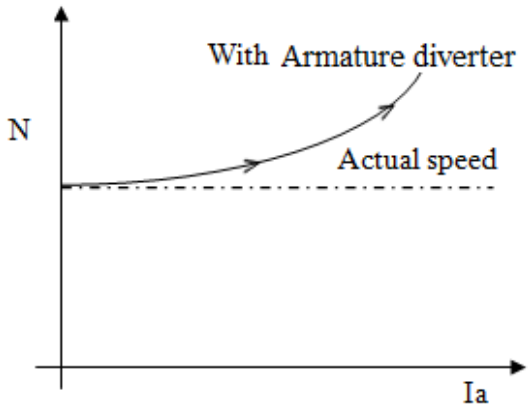

Speed (N) Vs armature current (I_a) characteristics

The variation in speed w.r.t armature (or) field current is as shown in speed Vs field current characteristics. From the characteristics, it is clear that only above the actual seed can be obtained.

iii) Tapped Field Control:

In this method, the no. of field winding turns is changed to get various speeds. The connection diagram for the tapped field control for the speed control of DC series is as shown in figure.

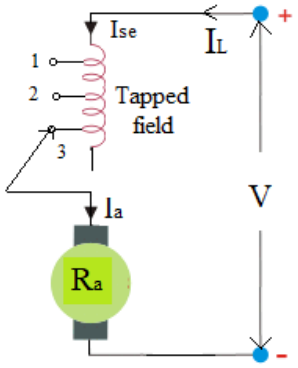

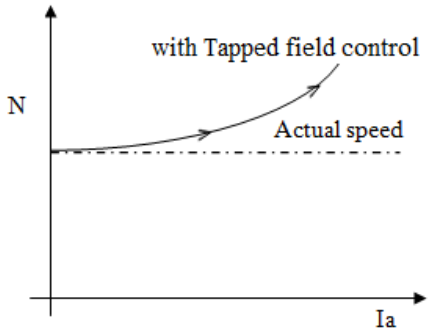

Tapped field control method

Speed (N) Vs armature current (I_a) characteristics

We know the flux produced by the field winding depends on Ampere Turns i.e flux $\phi \alpha (I_{se} x$ Series field turns). As the no. of series field turns are reduced, flux produced by the field winding is reduced, hence the speed of the motor is increase ($N \alpha 1/\phi$).

The variation in speed w.r.t armature (or) field current is as shown in speed Vs field current characteristics. From the characteristics, it is clear that only above the actual seed can be obtained. **This method is used in electric traction.**

Advantages flux control method:

1. Above actual speeds are possible.
2. More efficient method because less power is wasted in control resistance (R) due to less field current.
3. This method speed control is easy and convenient to conduct.

Disadvantages of flux control method:

1. Below actual are not possible.
2. It is applicable to limited range of speed control only because of pole saturation.

3. Commutation becomes unsatisfactory.

Example : *A series motor with unsaturated magnetic circuit and with negligible resistance when running at a certain speed, on a given load takes 50 A at 500 V. If the load torque varies as cube of the speed, find the resistance necessary to reduce the speed by 20%.*

Solution : In series motors, $T \propto \phi I_a$; $T \propto I_a^2$ $(\because \phi \propto I_a)$

Given that, $T \propto N^3$ $\therefore$ $I_{a1}^2 \propto N_1^3$ and $I_{a2}^2 \propto N_2^3$

or $$\frac{I_{a2}}{I_{a1}} = \left(\frac{N_2}{N_1}\right)^{1\cdot5} \text{ or } I_{a2} = \left(\frac{N_2}{N_1}\right)^{1\cdot5} \times I_{a1}$$

Now, $N_2 = 0\cdot8\, N_1$ $\therefore$ $I_{a2} = (0\cdot8)^{1\cdot5} \times 50 = 35\cdot777$ A

Circuit resistance in first case, $R_1 = \frac{V}{I_{a1}} = \frac{500}{50} = 10\ \Omega$

Circuit resistance in second case, $R_2 = \frac{V}{I_{a2}} = \frac{500}{35\cdot777}$ $13\cdot975\ \Omega$

Additional resistance required to reduce the speed ;

$R = R_2 - R_1 = 13\cdot975 - 10 = 3\cdot975\ \Omega$ *(Ans.)*

Example 12.18 : *A d.c. shunt motor runs at 1000 r.p.m. on 220 V supply. Its armature and field resistances are 0.5 ohm and 110 ohms respectively and the total current taken from the supply is 26 A. It is desired to reduce the speed to 750 r.p.m. keeping the armature and field currents same. What resistance should be inserted in the armature circuit ?*

Given that

(i) **Before addition of resistance**

Supply voltage $V_t = 220V$, $Ra = 0.5\Omega$, $R_{sh} = 110\ \Omega$ Supply voltage $V_t = 220V$, $Ra = 0.5\Omega$, Speed $N_1 = 1000$ rpm, supply current $I_{L1} = 26A$

(ii) **After addition of resistance**

$R_{sh} = 110\ \Omega$ Speed $N_2 = 750$ rpm,

Shunt field current $I_{sh} = V_t / R_{sh} = 220/110 = 2A$; Armature current $I_{a1} = I_{a2} = I_L - I_{sh} = 26 - 2 = 24A$

Back EMF $E_{b1} = V_t - I_{a1} R_a = 220 - 24*0.5 = 208V$

Let the resistance connected in series with the armature be R ohms, as shown in fig. to reduce the speed to 750 r.p.m.

Then, induced e.m.f.,

$$E_{b2} = V - I_a (R_a + R) = 220 - 24\,(0{\cdot}5 + R) = (208 - 24\,R)\ V \quad ...(i)$$

Now, we know that, $N \propto \frac{E_b}{\phi}$

Flux ϕ is constant because shunt field current remains the same.

$\therefore\ N_1 \propto E_{b1}$ and $N_2 \propto E_{b2}$ Taking their ratio, $\frac{E_{b2}}{E_{b1}} = \frac{N_2}{N_1}$

or $$E_{b2} = \frac{N_2}{N_1} \times E_{b1} = \frac{750}{1000} \times 208 = 156V \quad ...(ii)$$

Equinating eq. (i) and (ii), we get,

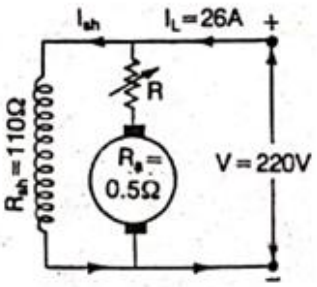

$208 - 24R = 156$ ➔ $R = (208 - 156)/24 = \mathbf{2.167\Omega}$

DC Motor Starters:

Need of starter in DC motor:

The general motor emf equation is $E_b = V_t - I_a R_a$ .Where Vt = Supply Voltage; E_b = Back EMF; I_a = Armature Current; and R_a=Armature Resistance. Since at starting $E_b = 0$, then $Vt = I_a.R_a$. Hence we can rearrange for the armature current $I_a = \frac{V_t}{R_a}$. Now from this equation, the current will be dangerously high at starting (as the armature resistance R_a is small). To limit this dangerous current, an external resistance to be connect in series with armature.

Starter is a variable resistance that is connected in series with the armature to limit the starting current drawn by the motor.

In DC motors there are three types of starters are there,

i) Two point starter – used for series motors only

ii) Three point starter – used for both shunt and compound motors

iii) Four point starter – used for compound motors only

Three point starter:

When a DC motor is started, it initially draws a very high current because the back electromotive force (EMF) is low at standstill. The three-point starter introduces a resistance in series with the armature winding to

limit this high starting current. The DC motor based 3 point starter mainly includes three terminals namely L, A, and F. Here, L (line terminal) is connected to the positive supply, A (armature terminal) is connected to the windings of an armature terminal, and F (field terminal) is connected to the winding of field terminal. At the beginning of the motor position, the motor field winding gets the total supply voltage, and the armature current is restricted to the particular secure value by the resistance. The schematic diagram of 3point starter is as shown below.

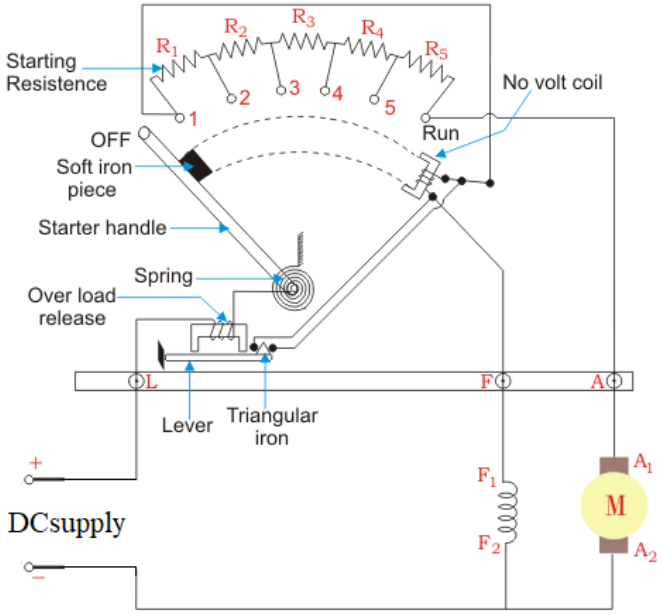

Three Point Starter

Working: The starter handle is moved from the OFF position to the first stud; this ensures that the armature is connected to the supply through the entire starting resistance. As the motor gains speed, back EMF builds up, reducing the current. The handle is moved further, progressively cutting out sections of the starting resistance. When the handle reaches the RUN position, all the starting resistance is eliminated, and the motor runs at its normal speed. The 3 point starter has tow protective devices, called No volt Release Coil (NVRC) and Over Load Release Coil (OLRC).

No Volt Release Coil (NVRC): When field current flows, the NVRC is magnetized. Now when the handle is in the 'RUN' position, a soft iron piece is connected to the handle and gets attracted by the magnetic force produced by NVRC, because of flow of current through it. The NVRC is designed in such a way that it holds the handle in 'RUN' position against the force of the spring as long as supply is given to the motor. Now when there is a failure in supply, the current flow through NVRC is affected and it immediately loses its magnetic property and is unable to keep the soft iron piece on the handle, attracted. At this point under the action of the spring force, the handle comes back to OFF position, opening the circuit and thus switching off the motor. So due to the combination of NVRC and the spring, the starter handle always comes back to OFF position whenever there is any supply problem.

Over Load Release Coil (OLRC): The OLRC is connected in series with the motor armature and it carries the same current as the motor. Under normal operational condition, the current flowing through the OLRC is insufficient to create a strong magnetic field to operate tripping mechanism. When an overload occurs, the motor draws a higher-than-normal current. This increased current energizes the OLR coil, creating a strong magnetic field, and attract the plunger or lever. This short circuit the NVRC terminals, the NVRC is now demagnetized and opens the main power contacts.

Testing of DC Motors

DC machines are tested using various methods to assess their performance and ensure they meet design specifications. Various types of testing of DC motor are

(i) Direct Test or Brake Test

(ii) Indirect Test - Swinburne's Test, Hopkinson's Test and Field's Test for Series Motors

Brake Test (or) Direct Test:

The main purpose of this test is to find the motor's efficiency under various load conditions. It is also known as direct test method. It consists of spring balances, belt and pulley for applying a brake as shown in figure (a). The motor is running and the load on the motor is adjusted till it carries its full load current. Let

S_1 and S_2 are the spring balances (Kg)
r = Radius of the pulley in mts
N = motor or pulley speed (*rpm*)
V = Supply voltage ;
I = Full-load current of the motor.
Motor input power = V.I watt
Shaft torque of the motor

$$T = 9.81\ (S_1 - S_2)\ r \text{ N-m}$$

Motor output power = $\frac{2\pi NT}{60}$ watt

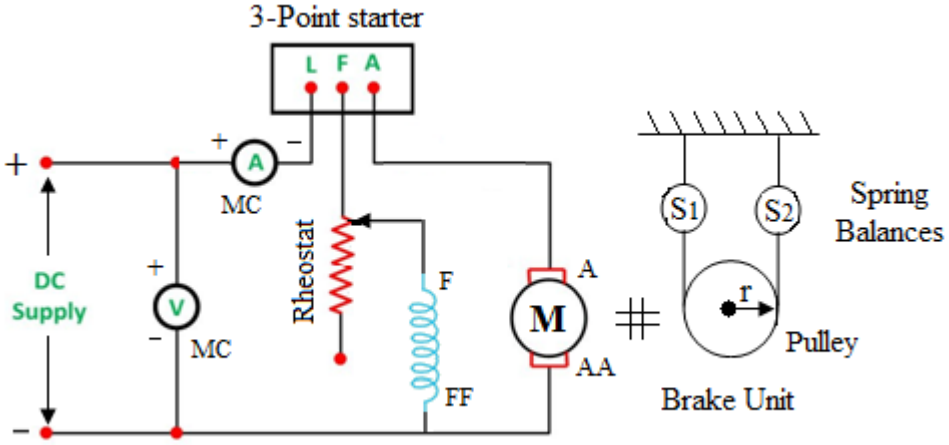

% Efficiency of the motor ($\%\eta_m$) = $\frac{\text{Output power}}{\text{Input power}} * 100$

The main drawback of this method is it used for small motors only, because in the case of large motors, it is difficult to dissipate the large amount of heat generated at the brake.

- ***In a brake test the effective load on the branch pulley was 38.1 kg, the effective diameter of the pulley 63.5 cm and speed 12 r.p.s. The motor took 49 A at 220 V. Calculate the output power and the efficiency at this load.***

Given that Diameter of the pulley = 63.5 cm, Radius (r) = 0.635/2 = 0.3175 m
Speed (N) = 12*60 = 720 rpm; Effective load = (S_1 - S_2) = 38.1 Kg
Shaft torque = 9.81 (S_1 - S_2) r = 9.81 (38.1 – 0)* 0.3175 = 118.6 N-m
Motor output power = 2πNT/60 = (2π*720*118.6)/60 = 8,945 W
Motor input = V*I = 220*49 = **10,780W**

Efficiency of the motor (η) = Output / Input = 8945/10780 = **0.83** or **83%**

The following readings are obtained when doing a load test on a d.c. shunt motor using a brake drum :

Spring balance reading	*10 kg and 35 kg*	*Radius of the drum*	*20 cm*
Speed of the motor	*950 r.p.m.*	*Applied voltage*	*200 V*
Line current	*30 A*		

Calculate the output power and the efficiency.

Given that Radius (r) = 0.2 m, Speed (N) = 950 rpm; Spring balances S_1 = 10Kg & S_2 = 35Kg
Voltage V= 200V, Current I = 30A
Shaft torque = 9.81 (S_1 - S_2) r = 9.81 (35 – 10)* 0.2 = 49.05 N-m
Motor output power = 2πNT /60 = (2π*950*49.05)/60 = 4879.67 W
Motor input = V*I = 200*30 = **6000W**

Efficiency of the motor (η) = Output / Input = 4879.67/6000 = **0.8132** or **81.32%**

Swinburne's Test (No load or Losses method):

In this method, the efficiency of the machine can be predetermined at any desired load. This test is applicable to those machines in which flux is practically constant i.e. shunt and compound-wound machines. The machine is running as a motor on no-load at its rated voltage *i.e.* voltage shown on the name - plate. The speed is adjusted to the rated speed with the help of shunt field rheostat as shown in figure.

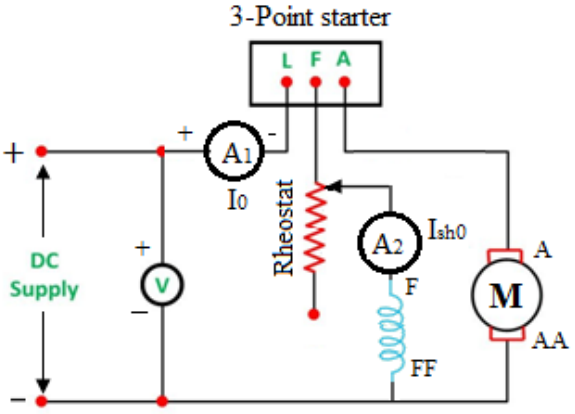

Let V is the supply voltage
I_{sh} is shunt field current given by ammeter A_2.
I_0 is the no-load current, measured by A_1
I_{a0} is the no-load armature current = (I_0 □ I_{sh})
No load arm. Cu losses = $(I_{a0})^2 R_a$
No-load input power = VI_0 watt
Constant losses W_{const} = No load i/p - No load arm. Cu losses

Efficiency when running as a Generator:

Let I_L is current at particular load

Output power = VI_L ; Armature current $I_a = I_L + I_{sh}$

Armature Cu loss = $I_a^2 R_a$

□ Total losses = Constant losses + Armature Cu loss = $W_{const} + I_a^2 R_a$

$$\% \text{ Efficiency of the Generator } (\%\eta_g) = \frac{\text{Output power}}{\text{Input power}} * 100$$

Efficiency when running as a Motor:

Let I is the current taken by the motor

Input power = VI ; Armature current $I_a = I - I_{sh}$

Armature Cu loss = $I_a^2 R_a$

□ Total losses = Constant losses + Armature Cu loss = $W_{const} + I_a^2 R_a$

$$\% \text{ Efficiency of the motor } (\%\eta_m) = \frac{\text{Output power}}{\text{Input power}} * 100$$

Advantages of Swinburne's Test:

- It is convenient and economical because power required to test is small *i.e.* it requires only no-load input power.
- The efficiency can be predetermined at any load because stray-losses are known.

Dis-advantages of Swinburne's Test:

- The change in iron losses from no-load to full-load is not considered.
- This test is not suitable for testing the DC series motor.

Prob: A 220 V, d.c. shunt motor at no load takes a current of 2.5 A. The resistances of the armature and shunt field are 0.8Ω and 200Ω respectively. Estimate the efficiency when acting as (i) Motor, input current is 20 A (ii) Generator, output current is 20 A.

Solution. No-load input = $VI_0 = 220 * 2.5 = 550$ W

Shunt field current $I_{sh} = V/R_{sh} = 220/200 = 1.1$ A.

No-load arm current, $I_{a0} = I_0 - I_{sh} = 2.5 - 1.1 = 1.4$ A;

No-load armature Cu loss = $I_{ao}^2 R_a = 1.4^2 * 0.8 = 1.6$ W

Constant losses = 550 - 1.6 = **548.4 W**

Acting as motor, input current is 20 A

Input power = VI = 220 * 20 = 4,400 W

Armature current $I_a = I - I_{sh} = 20 - 1.1 = 18.9$ A ; Armature Cu loss = $18.9^2 * 0.8 = 282.75$ W

Total loss = Constant loss + Armature cu loss = 548.4 + 282.75 = 831.15W ;

Output power = Input – Total losses = 4,400 - 831.15 = 3568.85 W

% Efficiency = (output power/ input power) = (3568.85/4400) * 100 = **81.12%**

Acting as generator, input current is 20 A

Input power = $VI_g = 220 * 20 = 4,400$ W

Armature current $I_a = I + I_{sh} = 20 + 1.1 = 21.1$ A ; Armature Cu loss = $21.1^2 * 0.8 = 356.16$ W

Total loss = Constant loss + Armature cu loss = 548.4 + 356.16 = 904.56W ;

Output power = Output + Total losses = 4,400 + 904.56 = 5304.56 W

% Efficiency = (output power/ input power) = (4400/5304.56) * 100 = **82.94%**

When running on no load, a 400V shunt motor takes 5A. Calculate the efficiency when the motor is running on full load and taking a current of 50A. Take armature resistance as 0.5Ω and field resistance as 200Ω.

Field's Test:

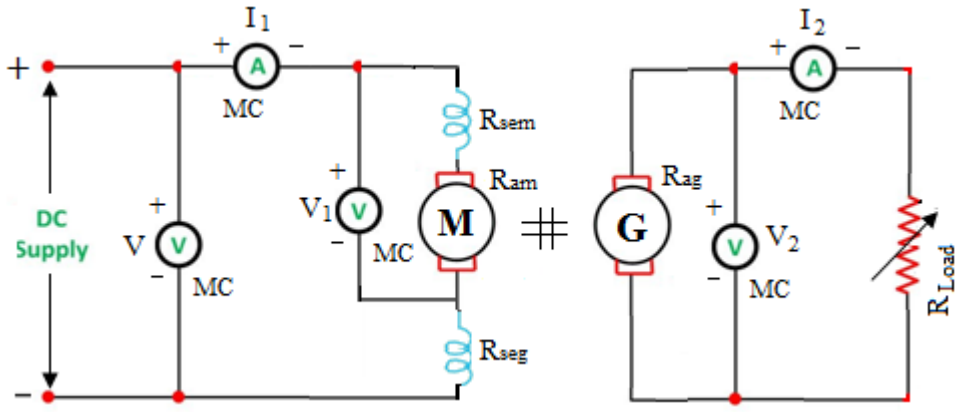

In this test two identical (similar) DC series machines are used. These two machines are mechanically coupled together and their field windings are connected in series as shown in figure.

Here one machine runs normally as motor and supplies mechanical power to drive the other machines as a generator. A variable resistive load is connected across the terminals of the generator as shown in figure.

The load resistance 'R' is varied until the motor draws its full load current (I_1) as per its name plate. After getting full load current (I_1), note down the values of various meters.

Let

V is the supply voltage

I_1 is the motor full load current

V_2 and I_2 are the load voltage and currents respectively.

For M-G set

Input power = VI_1 and Output power = $V_2 I_2$

Total losses W_t = input power – output power = $V I_1 - V_2 I_2$

Total copper losses = $I_1^2 R_{am} + I_2^2 R_{ag} + I_1^2(R_{sem} + R_{seg}) = I_1^2(R_{sem} + R_{am} + R_{seg}) + I_2^2 R_{ag}$

Total stray losses = Total losses – Total copper losses = $W_t - [I_1^2(R_{sem} + R_{am} + R_{seg}) + I_2^2 R_{ag}]$

Stray losses for each machines W_{stray} = Total stray losses/2

Machine acting as a Motor:

Motor input = $V_1 I_1$; Motor losses = Stray losses + Motor armature and field copper losses

$= W_{stray} + I_1^2(R_{sem} + R_{am})$

Motor output = Motor input – Motor losses

$$\text{Motor efficiency } (\eta_m) = \frac{\text{Motor output}}{\text{Motor input}} = \frac{V_1 I_1 - \left[W_{stray} + I_1^2 (R_{sem} + R_{am})\right]}{V_1 I_1}$$

Machine acting as a Generator:

Generator output = $V_2 I_2$;

Generator losses = Stray losses + Generator armature and field copper losses

$= W_{stray} + I_1^2 R_{seg} + I_2^2 R_{ag}$

Generator input = Generator output + Generator losses

$$\text{Generator efficiency } (\eta_g) = \frac{\text{Generator output}}{\text{Generator input}} = \frac{V_2 I_2}{V_2 I_2 + \left[W_{stray} + I_1^2 R_{seg} + I_2^2 R_{ag}\right]}$$

The main drawbacks of this test are,

- Two identical DC series machines are required whose cost is more.
- Most of the generated power is wasted as heat across the load resistance.

Prob: A test on two coupled similar tramway motors, with their fields connected in series, gave the following results when one machine acted as a motor and the other as a generator.

Motor: Armature current = 56A ; Armature voltage = 590 V; Voltage drop across field winding = 40 V Generator : Armature current = 44A ; Armature voltage = 400 V; Field voltage drop = 40 V ;

The connection for the two machines are shown in Fig.

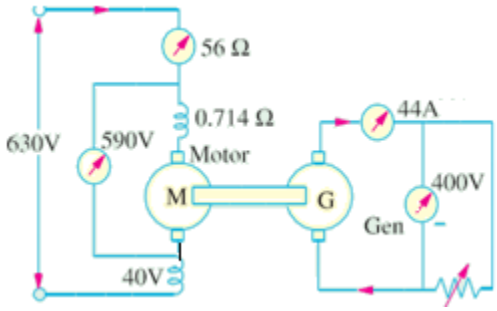

For whole set

Input power = 630 □ 56 = 35,280 W

Output power = 400 □ 44 = 17,600 W

Total losses = 35,280 □ 17,600 = 17,680 W

Total Cu loss = 56^2 *0.3 + 44^2 □ 0.3 + 56*40 + 44*40
= 6,006 W

Total Stray losses = 17,680 □ 6,006 = 11,674 W

□ Stray losses/machine = W_{stray} = 11,674/2 = 5,837 W

Machine acting as Motor

Motor input = Motor voltage □ motor current = 590 □ 56 = 33,040 W

Motor Cu loss = 56^2 *0.3 + 56 *40 = 3,180 W

Total losses = Motor Cu loss + Stray loss = 3,180 + 5,837 W = 9,017 W

Output = 33,040 □ 9,017 = 24,023 W

□□□□□□□□□Motor efficiency □$_m$ = 24,023/33,040 = 72.7%

Machine acting as Generator

Generator Output = 400 □ 44 = 17,600 W; Armature Cu loss = 44^2 □ 0.3 = 581 W,

Series field Cu loss = 40 □ 56 = 2,240 W

Total losses = 581 + 2,240 + 5,837 = 8,658 W

□□□□□□□□□Generator efficiency □$_g$ = 17,600/(17,600 + 8,658) = 67%

Hopkinson's Test:

It is also known as regenerative test or back to back test or heat run test. It requires two identical DC Shunt machines and is mechanically coupled to each other. One of these two machines is operated as a generator to supply the electrical power to the motor and the other is operated as a motor to drive the generator. The connection diagram for the **Hopkinson's test** shown in figure below.

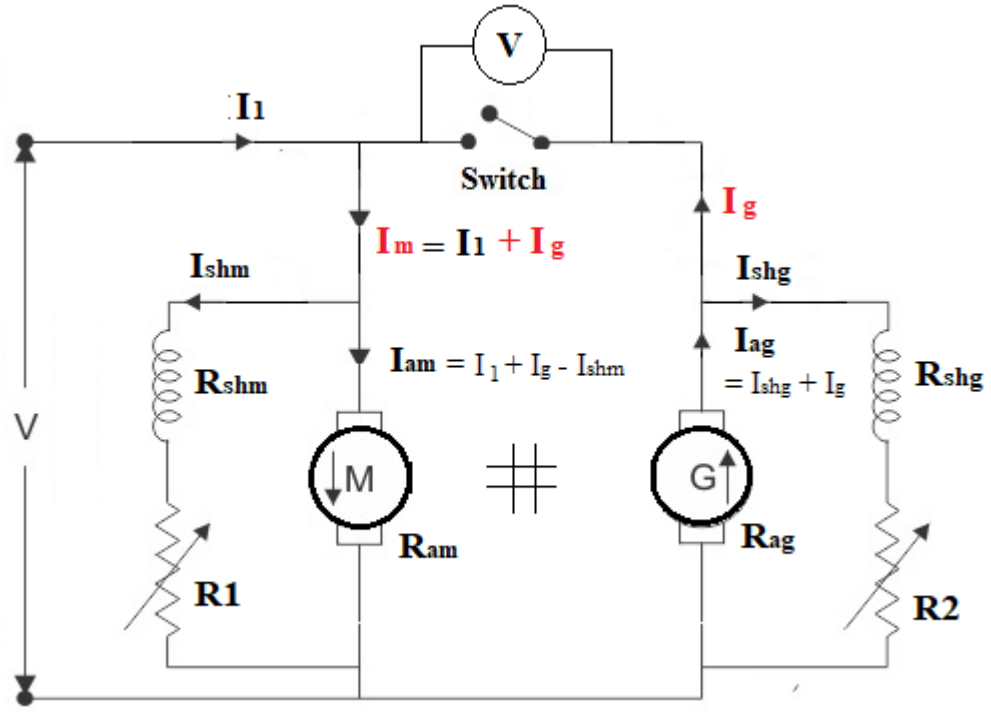

Initially, the shunt field resistance of the machine-I (motor) is adjusted such that the motor can run at its rated speed. Similarly by adjusting the shunt field resistance of the generator, the generator voltage is made equal to the supply voltage. The difference between generator voltage and supply voltage is indicated by the voltmeter (V_1). The switch S is closed when voltmeter V_1 shows zero reading and note down the values of all meters.

For whole set

Let V = Supply voltage and supply current I_1 , then Total input power = $V^* I_1$

Total cu losses = $I_{am}^2 R_{am} + I_{shm}^2 R_{shm} + I_{ag}^2 R_{ag} + I_{shg}^2 R_{shg}$

Total stray losses = Input power - Total cu loss = $V^* I_1 – (I_{am}^2 R_{am} + I_{shm}^2 R_{shm} + I_{ag}^2 R_{ag} + I_{shg}^2 R_{shg})$

Stray loss for each machine W_{stray} = Total stray losses/2

Acting as a Generator:

Generator output = VI_g ; Generator cu losses = $I_{ag}^2 R_{ag} + I_{shg}^2 R_{shg}$ where $I_{ag} = I_g + I_{shg}$

Generator losses = Wstray + Generator cu losses = Wstray + $I_{ag}^2 R_{ag} + I_{shg}^2 R_{shg}$

Generator input power = Generator output + Generator losses = $V^* I_{ag} + W_{stray} + I_{ag}^2 R_{ag} + I_{shg}^2 R_{shg}$

$$\text{Generator efficiency } (\eta_g) = \frac{\text{Generator output}}{\text{Generator input}} = \frac{V I_{ag}}{V I_{ag} + \left[W_{stray} + I_{ag}^2 R_{ag} + I_{shg}^2 R_{shg}\right]}$$

Acting as a Motor:

Motor input = $V.I_m = V.(I_1 + I_g)$; Motor cu losses = $I_{am}^2 R_{am} + I_{shm}^2 R_{shm}$; where $I_{am} = (I_1 + I_g - I_{shm})$

Motor losses = W_{stray} + Motor cu losses = $W_{stray} + I_{am}^2 R_{am} + I_{shm}^2 R_{shm}$

Motor output power = Motor input - Motor losses

$= V(I_1 + I_g) - (W_{stray} + I_{am}^2 R_{am} + I_{shm}^2 R_{shm})$

$$\text{Motor efficiency } (\eta_m) = \frac{\text{Motor output}}{\text{Motor input}} = \frac{V.I_{am} - \left[W_{stray} + I_{am}^2 R_{am} + I_{shm}^2 R_{shm}\right]}{V.I_{am}}$$

Merits of Hopkinson's Test:

1. This method is very economical.
2. Large machines can be tested at full load because; the power required for the test is small.
3. As machines are tested under full-load conditions, the rise in temperature of the machines can be observed.

Disadvantage:

The only disadvantage of this method is that it requires two identical shunt machines.

Note: If both machines have same efficiency, the each machine efficiency is calculated as

$$\text{Efficiency } (\eta) = \sqrt{\frac{I_m}{I_m + I_g}}$$

Prob: *In a Hopkinson's test on two 220-V, 100-kW generators, the circulating current is equal to the full-load current and, in addition, 90 A are taken from the supply. Obtain the efficiency of each machine.*

Prob: The Hopkinson's test on two shunt machines gave the following results for full- load :

Line voltage = 250 V ; current taken from supply system excluding field currents = 50 A ; motor armature current = 380 A ; field currents 5 A and 4.2 A. Calculate the efficiency of the machine working as a generator. Armature resistance of each machine is 0.02Ω

Sol. The connections are shown in Fig.

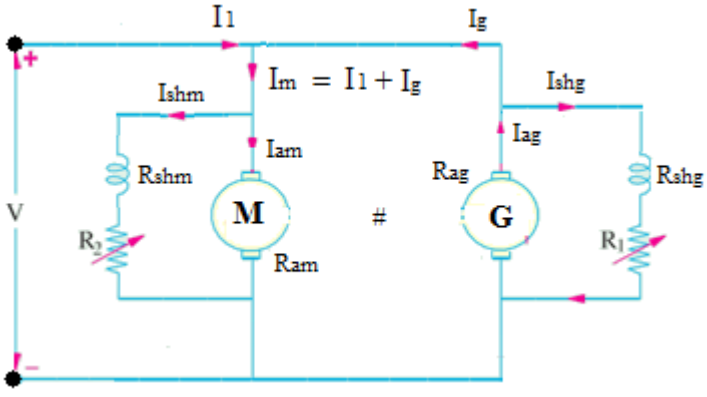

For whole set:

Input Power = V*I_l = 250 □ 50 = 12,500 W;

Total Cu loss = I_{am}^2 * R_{am} + I_{ag}^2 * R_{ag}

$= 380^2$ □ 0.02 + 329.2^2 □ 0.02

= 5055.45 W

Total Stray losses = 12,500 □ (2,888 + 2,167.45)

= 7,444.55 W

Stray losses per machine W_{stray} = 7,444.55/2 = 3,722.27 W

Acting as a Motor: Motor input = V*I_{am} = 250 □ 380 = 95000W

Motor Cu loss = I_{am}^2 * R_{am} + I_{shm}^2 * R_{shm} = I_{am}^2 * R_{am} + I_{shm}(I_{shm} * R_{shm})

$= 380^2 * 0.02 + 250 \square 4.2 = 3938W$

Total loss = W_{stray} + Motor Cu loss = 3,722.27 + 3938 = 7660.27W

Motor output = Motor input – Motor losses = 95000 - 7660.27 = 87339.73W

□□□□□ Motor Efficiency $\square_m$ = 87339.73/95000 = 0.9193 or 91.93%

Generator Efficiency: Generator output = V * I_{ag} = 250 □ 329.2 = 82,300 W

Generator Cu loss = $I_{ag}^2 * R_{ag} + I_{shg}^2 * R_{shg} = I_{ag}^2 * R_{ag} + I_{shg}(I_{shg} * R_{shg})$

$= 329.2^2 * 0.02 + 250 \square 5 = 3417.45W$

Total losses = W_{stray} + Generator Cu loss = 3,722.27 + 3417.45 = 7139.72W

Generator input = Generator output + Total losses = 82,300 + 7139.72

= 89,439.72 W

□□□□□□□□□□□□ Generator Efficiency $\square_g$ = 82,300/89,439.72 = 0.92017 or 92.017%

Assignment Questions

1(a). What is back EMF. What is its significance?

(b). Write the applications of various DC Motors.

(c). In a brake test on DC shunt motor, the spring balance readings were 3.5Kg and 0.75Kg. The radius of the pulley was 9cm, the motor speed was 1250rpm. Determine the output power.

(d). What is the necessity of the starter in DC motor. Suggest the suitable DC starters used for DC shunt motor, Series motor and DC compound motor.

(e)Write the advantages and disadvantages of Swin burne's test.

2. Write a short note on (i) Direct test, and (ii) No-load test.

3. Explain how the speed of the dc motor may be controlled by (i) Armature voltage control and (ii) Flux control.

4. Draw the neat diagram of 3-point starter. Explain the function of protective coils.

Unit-3: SINGLE PHASE TRANSFORMER

Syllabus: Construction – principle of operation of single-phase transformer – classification – emf equation – operation on no-load and on load – equivalent circuit – regulation – losses and efficiency – effect of variation of frequency and supply voltage on losses – applications.

Transformer is static devices *which transfers the A.C electrical power from one circuit to another circuit without changing the frequency, but voltage levels are changed according to requirement*.

The transformer consists of two windings called Primary Winding and Secondary Winding. The winding which is connected to ac supply is called primary winding and the winding which is connected to load is called secondary winding. The symbol of transformer is as shown below.

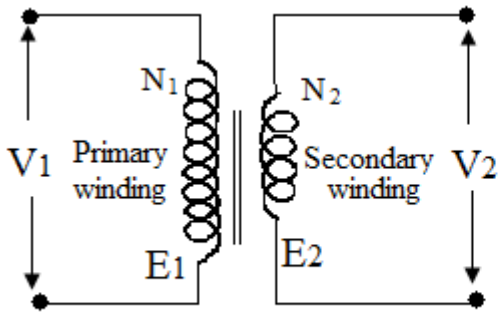

Step down transformer

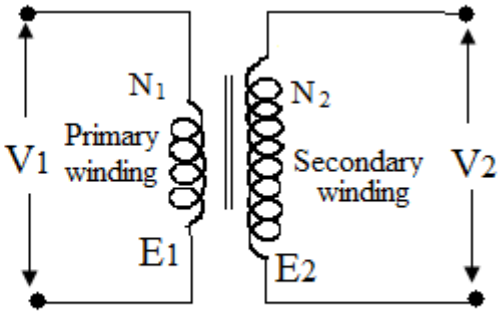

Step up Transformer

If the secondary voltage (V_2) is greater than primary voltage (V_1), then the transformer is called step up transformer and if the secondary voltage (V_2) is less than primary voltage (V_1), then the transformer is called step down transformer. In another way, if the secondary winding turns (N_2) is greater than primary winding turns (N_1), then the transformer is called step up transformer and if the secondary winding turns (N_2) is less than primary winding turns (N_1), then the transformer is called step down transformer.

Operating or Working principle of Transformer:

The transformer works on *mutual induction* principle. When two coils are kept near each other and current change in one coil is causing emf change in other then this phenomenon is called mutual induction. The transformer consists of two windings and are placed on laminated core as shown in figure.(1).

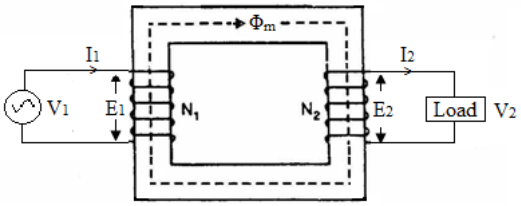

Figure (1)

When an AC supply of V_1 volts is connected to primary winding, an alternating flux is set up in the core. This alternating flux is linked with the secondary winding, an emf will induced across secondary winding called secondary emf (E_2) and the same flux is linking with the primary winding also, it produces an emf called primary emf (E_1). Both the primary and secondary emf directions are opposite to supply voltage (V_1) according to Lenz's law.

Ideal Transformer:

A transformer is said to be an ideal transformer when it obeys the following conditions (or) properties

(i) The resistance of the winding should be zero
(ii) There should not any leakage flux in the transformer core i.e the total flux produced in the core links with primary and as well as secondary.
(iii) The total losses in the transformer should be zero i.e the input power is equal to output power. i.e since the winding resistance and magnetic leakage flux is zero, Copper and Iron (Core) losses are zero respectively. So the efficiency of the idle transformer is 100%.

Since in ideal transformer the output (VA) equal to input (VA) i.e

$$E_2 I_2 = E_1 I_1 \rightarrow \frac{E_2}{E_1} = \frac{I_1}{I_2}$$

but the EMF is proportional to no .of turns (N) i.e E_1 □□□□□□□ E_2 □□□□□□Since it is a ideal transformer, the primary and secondary winding resistance is zero so E_1 □□V□□□□□ E_2 □□V□□

□□□ Transformation Ratio (K) = $\frac{E_2}{E_1} = \frac{V_2}{V_1} = \frac{N_2}{N_1} = \frac{I_1}{I_2}$

Transformation ratio is *the ratio of secondary turns to primary turns* and is represented by K.

EMF equation of 1-Ph Transformer:

When an AC voltage is applied to primary winding of transformer, a sinusoidal flux (Φ_m) as shown in fig.( ) is setup in the transformer core which links with both primary and secondary windings.

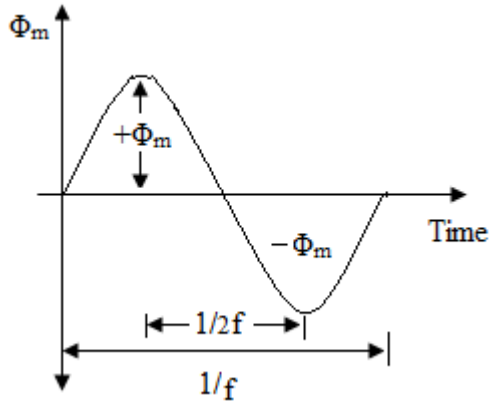

Let Φ_m = Maximum flux in wb = $B_m * A$

f = Frequency of the supply in Hzs.

N_1 = No. of turns in Primary winding.

N_2 = No. of turns in Secondary winding.

E_1 = EMF across Primary winding.

E_2 = EMF across Secondary winding.

According to faraday's law of electromagnetic induction principle, the average induced emf per turn is $d\Phi/dt$.

Where $d\Phi$ = Change in flux from $+\Phi_m$ to $-\Phi_m$

$= +\Phi_m - (-\Phi_m)$

$= 2\,\Phi_m$

and dt = Time required to change in flux from $+\Phi_m$ to $-\Phi_m$

$= 1/2f$

Average induced emf per turn = $\dfrac{2\phi_m}{1/2f}$

$= 4\,\Phi_m f$ volts

But we know that for sine wave, Form factor = $\dfrac{\text{RMS value}}{\text{Average value}} = 1.11$

RMS value of EMF per turn = 1.11 ($4\,\Phi_m f$) volts

$= 4.44\,\Phi_m f$ volts

Since the primary and secondary windings has N_1 and N_2 no. of turns respectively

RMS value of EMF in primary winding (E_1) = 4.44 $\Phi_m f$ N_1 volts

Similarly RMS value of EMF in secondary winding (E_2) = 4.44 $\Phi_m f$ N_2 volts

Note: if B_m is maximum flux density, A is area of the transformer core, then flux $\Phi_m = B_m A$ and EMF (E) = 4.44 $B_m A f$ N.

Prob: A 1-ph transformer has 400 primary and 1000 secondary turns. The net x-sectional area of core is 60cm^2. If the primary winding be connected to a 50Hz supply at 520V, calculated peak value of flux density in the core, voltage induced in secondary winding.

Sol: Given that

No. of turns at primary winding N_1 = 400 ; No. of turns at primary winding N_1 = 1000

Area of core A =60cm^2 = 60x10^{-4} m^2 ; Primary voltage V_1 = 520 V.

We know that transformation ratio (K) = $\frac{V_2}{V_1} = \frac{N_2}{N_1}$

Voltage induced in secondary voltage $E_2 = V_1 \frac{N_2}{N_1} = 520 \times \frac{400}{1000}$

= **208V**

Emf induce at primary winding $E_1 = 4.44\Phi_m f N_1 = 4.44(B_m \times A) f N_1$ (because $\Phi_m = B_m \times A$)

□□□Maximum flux density $B_m = E_1 / 4.44 A f N_1$

= 520 / 4.44. 60x10^{-4}.50.400

= **0.976 wb/m^2**

Prob: A 25KVA, 1-Ph, 50Hz, 6600/600V transformer has a maximum value of flux in the core is 0.08wb, find the no. of turns in each winding.

Sol: Given that 6600/600V i.e Primary voltage $V_1 = E_1$ = 6600V

Secondary voltage $V_2 = E_2 = 600V$ and Maximum flux $\Phi_m = 0.08wb$

We know that Primary EMF $E_1 = 4.44\ \Phi_m\ f\ N_1$

No. of turns at primary winding $N_1 = \dfrac{E_1}{4.44\,\Phi_m\,f} = \dfrac{6600}{4.44 \times 0.08 \times 50} = 372$ turns

Also Secondary EMF $E_2 = 4.44\ \Phi_m\ f\ N_2$

No. of turns at secondary winding $N_2 = \dfrac{E_2}{4.44\,\Phi_m\,f} = \dfrac{600}{4.44 \times 0.08 \times 50} =$ **34 turns**

Construction of T/F :

The transformer has two different types of constructions. Those are

(i) Core type transformer (ii) Shell type transformer

Core type construction: In core type construction, the magnetic core is built up with laminations in the form of L-shape limbs/strips or C & I shape limb as shown in fig. (2) and then the L-shaped limbs or C & I shape limb are joined as rectangular frame as shown in fig.(3).

In core type transformer, the primary and secondary windings placed on each limb to reduce the leakage flux as shown in fig.(3). Here a part of core is surrounded by the winding and it has only one magnetic path.

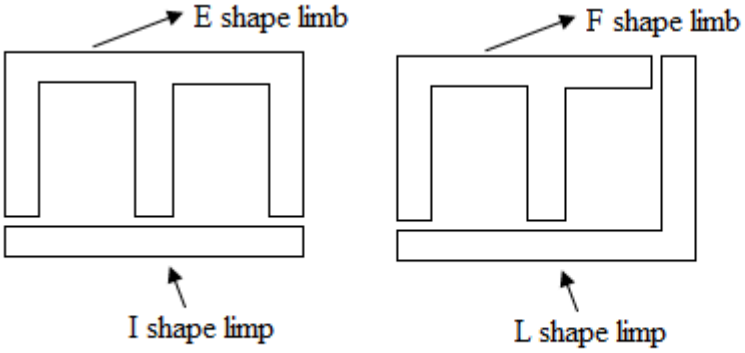

Figure.(4)

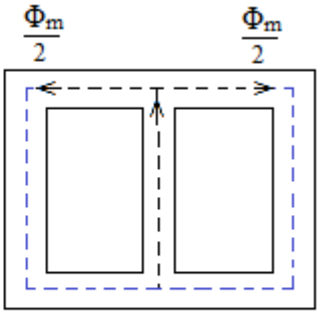

Figure.(5)

Shell type shell: In shell type shell, the magnetic core is built up with laminations in the form of E & I-shape limbs/strips or F & L-shape limbs/strips as shown in fig. (4) and then the E & I-shaped limbs or F & L-shape limbs/strips are joined as rectangular frame as shown in fig.(5).

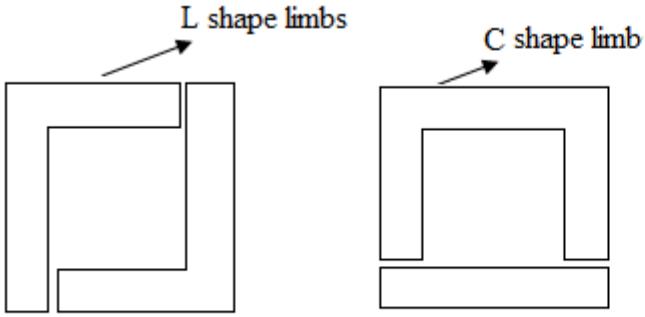

Figure.(2)

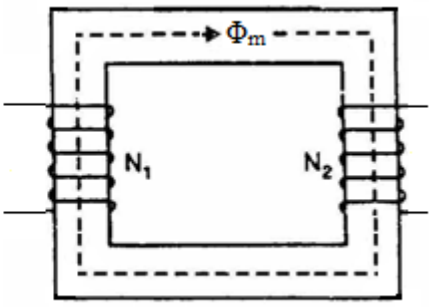

Figure.(3)

In shell type transformer, the primary and secondary windings are wound on central limb only as shown in fig.(5). Here the winding is surrounded by core and the total magnetic flux is splitted into two equal halves.

Transformer on DC :

A transformer cannot works on DC supply. When a DC supply is given to the primary, a flux of constant magnitude will be set up in the core. Since the flux is not moves in transformer core, the primary induced EMF E_1 which opposes the primary voltage is *zero*. If the impedance of primary winding is Z_1, then the primary current $I_1 = (V_1-E_1)/Z_1$whcih is very high. Thus it will produce more heat losses i.e $I_1^2R_1$ and the insulation on primary winding by melt. This result in short circuit of primary winding turns and primary winding burns. That is why DC supply is never applied to a transformer.

Transformer on No Load:

A transformer is said to be on No Load when the secondary of the transformer open circuited and secondary current I_2 is zero. Under no load condition, the transformer primary draws a minimum current called no load current I_0. This no load current is usually 5% to 7% of rated current because of this reason, the copper losses ($I_0^2R_1$) are low and are neglected. Since the secondary winding is opened the secondary copper losses ($I_2^2R_2$) are zero. Therefore the no load current I_0 lags the primary voltage V_1 by an angle ϕ_0 as shown in fig.(6).

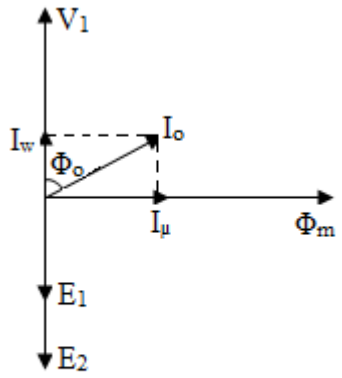

Fig (6): Vector diagram for No load onTransformer

The no load current I_0 has two components:

(i) Active or working component I_w and is in-phase with the supply voltage V_1. This current I_w supplies iron or core losses and small copper losses which are negligible.

(ii) Reactive or Magnetizing component I_μ which produces the flux Φ_m and is in phase with the flux Φ_m.

The fig.(6) shown the vector diagram for transformer on no load. From the vector diagram, Working component of current $I_w = I_0 \cos\phi_0$ and the Magnetizing component of current $I_\mu = I_0 \sin\phi_0$.

No load current $I_0 = \sqrt{I_w^2 + I_\mu^2}$ and No load input power $P_0 = V_1 I_0 \cos\phi_0$ watts

Transformer on Load:

When the transformer secondary is closed by a load, a current I_2 flows through the load as shown in fig.(7). The secondary current I_2 depends on terminal voltage V_2 and load impedance. The phase angle (ϕ_2) between the I_2 and V_2 depends on nature of the load i.e whether the load is resistive or inductive or capacitive. The operation of transformer on load is explained as follows:

When the transformer is on no load, the transformer draws no load current I_o from the supply. This no load current setup flux Φ_m in the core.

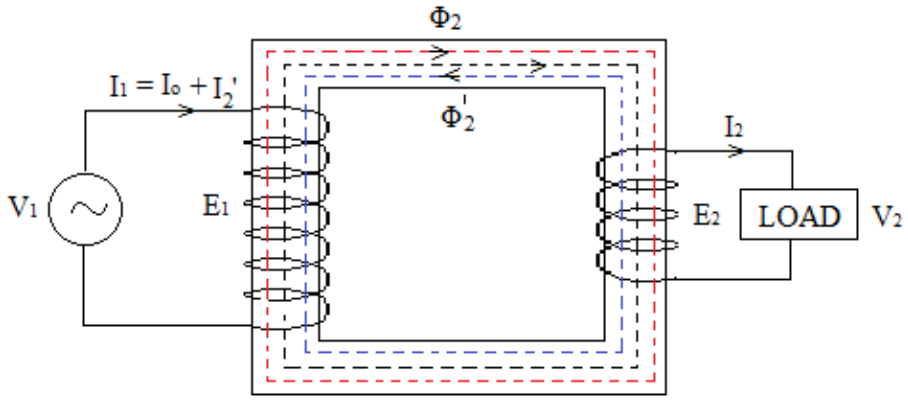

Fig.(7): Transformer on load

When the transformer is on load, a current I_2 flows through the secondary winding of transformer. This secondary current setups its own flux Φ_2 in the core, but the direction of this flux Φ_2 is opposite for the flux set up by the no load current I_0 according to Lenz's law. Since the flux Φ_2 is opposite for the flux Φ_m, the resultant flux ($\Phi_m - \Phi_2$) decreases and causes the reduction in self induced EMF (E_1). This causes the additional current I_2' from the supply (called as load component of primary current). This additional current crates a flux Φ_2' which is equal in magnitude but opposite to flux Φ_2. Now the flux in magnetic core is only Φ_m because the fluxes Φ_2 and Φ_2' cancels each other.

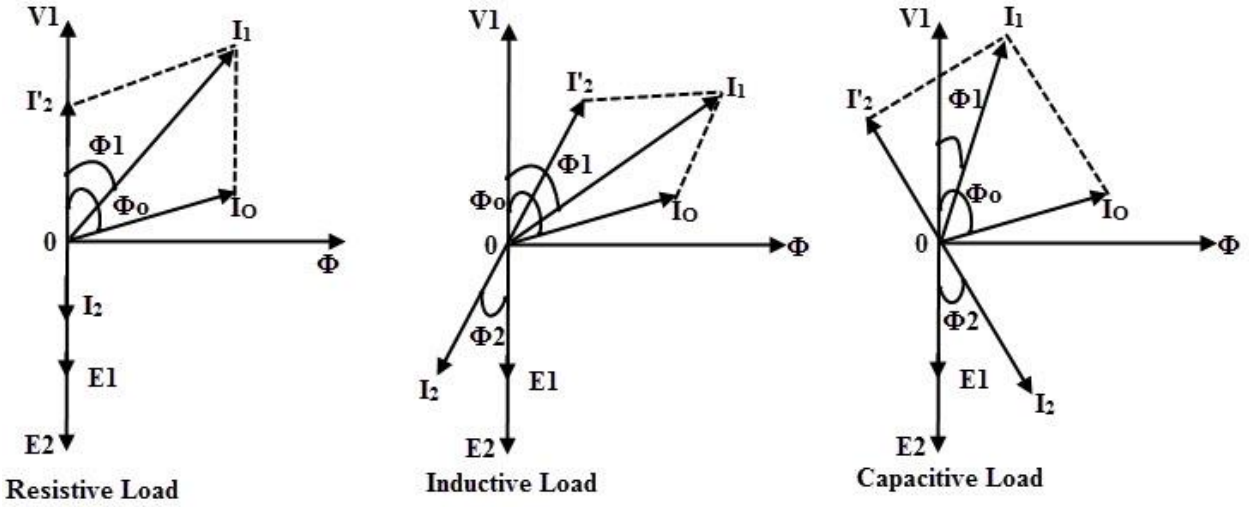

From the above discussion it is clear that the flux in the transformer core is constant when the load on the transformer is varies, hence the core or iron losses are constant irrespective of load variations. Now the total primary current is the vector sum of I_0 and I_2'. The phasor diagrams for various loads on transformer are as shown below.

To the draw the vector diagram, the flux is taken as reference. The EMFs E_1 and E_2 are opposite to supply voltage V_1 according to Lenz's law. The no-load current I_0 lags the voltage V_1 by angle ϕ_0. The additional current I_2' is opposite to current I_2. Therefore the total current I_1 is the sum of I_0 and I_2'. When the transformer is loaded with resistive load, the secondary current I_2 is in phase with secondary voltage V_2. For inductive load, the secondary current I_2 is lags the secondary voltage V_2 by an angle ϕ_2 and for capacitive load, the secondary current I_2 is leads the secondary voltage V_2 by an angle ϕ_2 The phase angle between the voltage V_1 and current I_1 is ϕ_1.

Losses and Effiency of Transformer:

Since the transformer is a *static device, the mechanical losses in transformer are zero*. Therefore the transformer has only Iron losses and Copper losses.

Iron losses (W_i): These losses are also known as constant losses or core losses because these losses are depend on flux but *flux is constant irrespective of load variations* in transformer. The Iron losses are divided into Hysteresis and Eddy current.

Hysteresis losses: The hysteresis losses are given by an empherical formula ie.

$$Wh \propto B_m^{1.6} f \text{ V watts} \quad \text{or}$$

$$Wh = K_h B_m^{1.6} f \text{ V watts}$$

Where K_h = hysteresis loss constant and is depends on type of material used for transformer core.

B_m = Maximum flux density ; V = volume of core in m^3 and f = Frequency in Hzs.

The hysteresis losses are minimized by designing the T/F core using the silicon/CRGO steel material.

Eddy current losses: The Eddy current losses are given by an emphatical formula ie.

$$We = B_m^2 f^2 V^2 t^2 \text{ watts} \quad \text{or} \quad We = Ke\, B_m^2 f^2 V^2 t^2 \text{ watts}$$

Where Ke = Eddy current loss constant and t =Thickness of the transformer core laminations.

B_m = Maximum flux density ; V = volume of core in m^3 and f = Frequency in Hzs.

Generally, the thickness of laminations of T/F core may varies from 0.35mm to 0.5 mm for 50Hz. The eddy current losses are reduced by laminating the transformer core. *The total iron losses are reduced by designing the T/F core with silicon/CRGO steel laminations. Practically, the Iron losses of transformer are determined by conducting Open Circuit (O.C) test.*

Copper losses (W_{cu}): These losses occur due to resistance of the transformer windings. Let R_1 and R_2 are internal resistance of primary and secondary windings, I_1 and I_2 are full currents of primary and secondary windings.

The primary winding copper losses are given by $I_1^2R_1$

The secondary winding copper losses are given by $I_2^2R_2$.

Total copper losses (W_{cu}) = $I_1^2R_1 + I_2^2R_2$ ➔ Full load copper losses

Total copper losses at x load (W_{cu}) = $x^2 (I_1^2R_1 + I_2^2R_2)$

The copper losses are also known as variable losses because they are proportional to square of the load current. Practically, these losses are determined by conducting Short Circuit (S.C) test on transformer.

Total losses: The total losses in T/F are the sum of iron losses and full load copper losses i.e

□□□□□□□□□□Total losses = Iron losses (W_i) + full load copper losses (W_{cu}) ➔ For full load

□Total losses for x load = $W_i + x^2$ full load copper losses

Effiency (η): The Effiency of the transformer are defined as the ratio of output power (P_0) to input power (P_i) i.e

$$\text{Effiency } (\eta) = \frac{\text{Output Power}}{\text{Input Power}} = \frac{\text{Output Power}}{\text{Output Power} + \text{Total losses}}$$

Output Power = $x\ V_2 I_2 \cos\phi = x$ (VA rating of transformer) power factor

Input Power = Output power + Total losses

= x (VA rating of transformer) p.f + Iron losses + x^2 full load Copper losses

$$\square\text{Effiency}(\eta) = \frac{\text{Output Power}}{\text{Input Power}} = \frac{\text{x (Rating of transformer) p.f}}{\text{x (Rating of transformer) p.f} + \text{Iron losses} + \text{x}^2 \text{ full load copper losses}}$$

Condition for max. Effiency(η_{max}):

The Effiency of the transformer are defined as the ratio of output power to input power i.e

$$\text{Effiency } (\eta) = \frac{\text{Output Power}}{\text{Input Power}} = \frac{\text{Input Power - losses}}{\text{Input Power}}$$

Input = $V_1 I_1 \cos\Phi_1$, Iron losses = $W_h + W_e$ and Total copper losses $W_{cu} = I_1^2 R_{01}$

$$\text{Effiency } (\eta) = \frac{\text{Input Power - losses}}{\text{Input Power}} = \frac{V_1 I_1 \cos\phi_1 - (W_i + I_1^2 R_{01})}{V_1 I_1 \cos\phi_1}$$

$$= 1 - \frac{(W_i + I_1^2 R_{01})}{V_1 I_1 \cos\phi_1}$$

$$= 1 - \frac{W_i}{V_1 I_1 \cos\phi_1} - \frac{I_1^2 R_{01}}{V_1 I_1 \cos\phi_1}$$

$$= 1 - \frac{W_i}{V_1 I_1 \cos\phi_1} - \frac{I_1 R_{01}}{V_1 \cos\phi_1}$$

To get max. Effiency, differentiating above equation on both sides w.r.t to I_1 and equate it to zero i.e

$$\frac{d\eta}{dI_1} = 0$$

$$\frac{d}{dI_1}\left(1 - \frac{W_i}{V_1 I_1 \cos\phi_1} - \frac{I_1 R_{01}}{V_1 \cos\phi_1}\right) = 0$$

$$0 - \frac{W_i}{V_1 \cos\phi_1}\left(-\frac{1}{I_1^2}\right) - \frac{R_{01}}{V_1 \cos\phi_1}) = 0$$

$$\frac{W_i}{V_1 I_1^2 \cos\phi_1} = \frac{R_{01}}{V_1 \cos\phi_1}$$

$$W_i = I_1^2 R_{01}$$

i.e for maximum Effiency, the condition is full load copper losses(variable losses) are equal to iron losses(Constant losses)

$$\text{Maximuneffiency } (\eta_{max}) = \frac{\text{Output Power}}{\text{Output Power} + W_i + W_{cu} \text{ at full load}} = \frac{\text{Out put Power}}{\text{Out put Power} + 2W_i}$$

EQUIVALENT CIRCUIT OF TRANSFORMER:

The equivalent circuit of a transformer is used to predetermine the behavior or performance of the transformer under various operating conditions. The transformer primary and secondary winding has resistance (R_1 & R_2), leakage reactance (X_1 & X_2). Under no load condition, the transformer draws no load current I_0 and this current is resolves into working component of current I_w and magnetizing component of current I_μ. The working component of current I_w produces resistance of R_0 and magnetizing component of current I_μ produces resistance of X_0. These R_0 and X_0 components are connected in parallel across the primary circuit as shown in fig.(4).

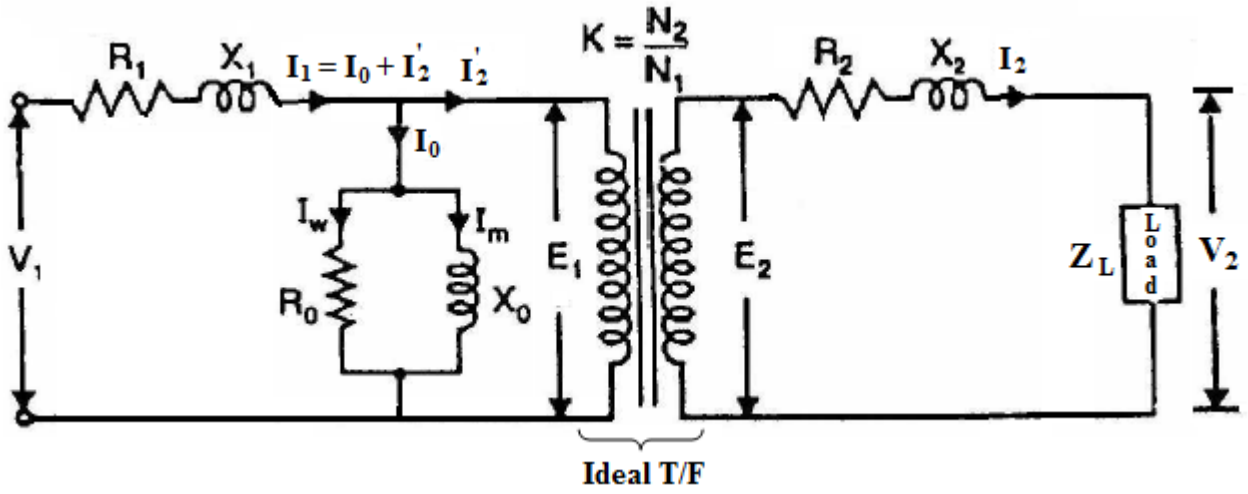

Fig. 4: Equivalent ckt of T/F

Since the effect of no load current I_0 is negligible on R_1+jX_1 impedance, so the no load parallel branch is moved towards supply voltage V_1 as shown below

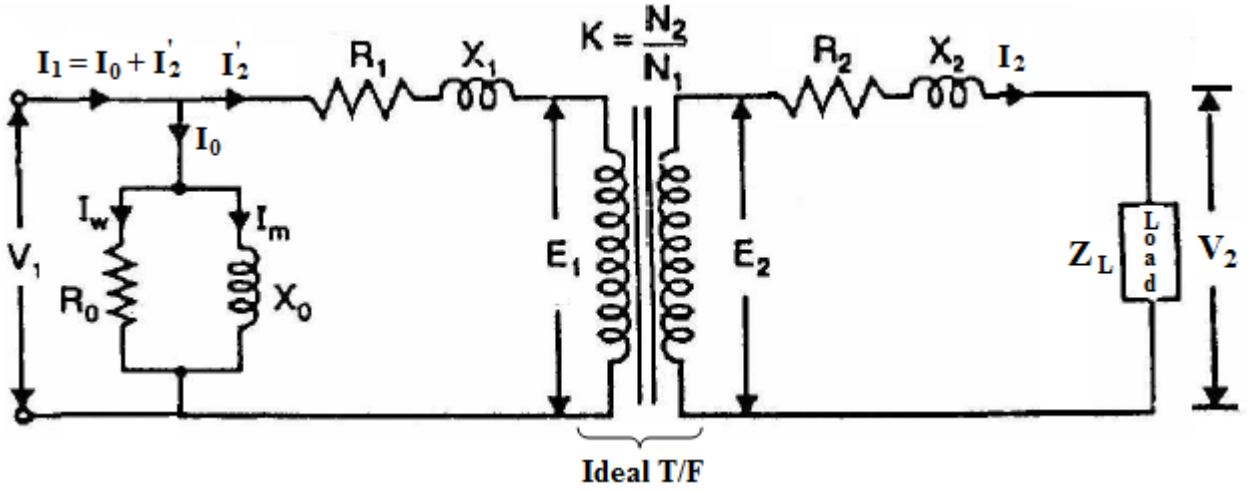

The above figure represents the exact equivalent circuit of 1-ph transformer.

(i) Equivalent circuit referred to primary:

If all the secondary quantities are referred to the primary, we get the equivalent circuit of the transformer referred to the primary as shown in Fig. (5).

i. Let R_2', X_2' and Z_L' are the resistance, reactance and load impedance of secondary winding referred to primary and are determined by dividing R_2, X_2 and Z_L with K^2
i.e $R_2' = R_2 / K^2$, $X_2' = X_2 / K^2$ and $Z_L' = Z_L / K^2$

ii. Similarly voltage and EMF are divided by K and current is multiplied by K. i.e $V_2' = V_2 / K$, $E_2' = E_2 / K$ and $I_2' = K I_2$.

Fig.5: Equivalent circuit of the transformer referred to the primary

we know that $R_{01} = R_1 + R_2'$ & $X_{01} = X_1 + X_2'$, the above citcuit diagram can redrawn as shown below

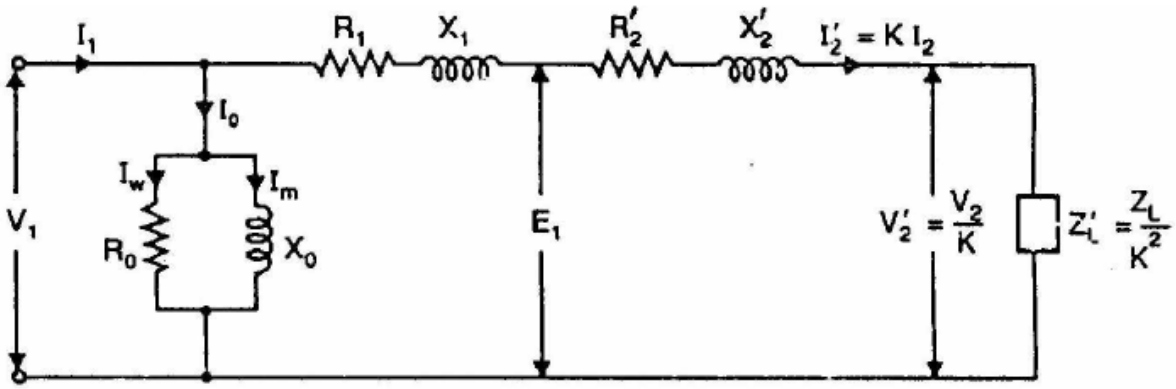

Voltage regulation of Transformer:

When a transformer is loaded with constant supply voltage (Primary voltage), the terminal voltage (Secondary voltage) changes depending upon the load and its power factor.

The voltage regulation of transformers is defined as ' *the change in secondary voltage from no load to full load with respect to full load voltage*'.

Let the secondary voltage at no load is ${}_0V_2 = E_2$ and V_2 = Secondary voltage on full load.

$$\text{then Voltage Regulation} = \frac{\text{No load secondary voltage - Full load secondary voltage}}{\text{Full load secondary voltage}} = \frac{E_2 - V_2}{V_2}$$

Secondary voltage $V_2 = E_2 - I_2 R_{02} \cos\phi_2 + I_2 X_{02} \sin\phi_2$

$$\therefore \text{ \% age Voltage Regulation} = \frac{E_2 - V_2}{V_2} \text{x} 100 = \frac{I_2 R_{02} \cos\phi_2 \pm I_2 X_{02} \sin\phi_2}{V_2} \text{x} 100$$

+ for lagging or inductive loads and – for leading or capacitive loads

For lagging or inductive loads, the voltage regulation is +ve and for leading or capacitive loads, the voltage regulation may be –ve.

Effect of Variations of Frequency & Supply Voltage on Iron Losses:

Let B_m = Maximum flux density;

v = volume of core in m^3 and t = thickness of laminations

f = Frequency in Hz; V = Supply voltage in volts.

K_h = hysteresis loss constant and K_e = eddy current loss constant

The iron losses of a transformer are $W_i = W_h + W_e$ ---------- (1)

The hysteresis losses are given as $W_h \propto B_m^{1.6} f v$

$$W_h = K_h B_m^{1.6} f v$$

$$W_h \propto B_m^{1.6} f$$

The Eddy current losses are given as $W_e \propto B_m^2 f^2 v^2 t^2$

$$W_e = K_e B_m^2 f^2 v^2 t^2$$

$$W_e \propto B_m^2 f^2$$

Iron losses $W_i = K_h B_m^{1.6} f + K_e B_m^2 f^2$ ---------- (2)

We know that $E_1 = V_1 = 4.44\, B_m A f N_1 \rightarrow B_m = \frac{V_1}{4.44 A f N_1}$

$$(2) \rightarrow W_i = K_h \left(\frac{V_1}{4.44 A f N_1}\right)^{1.6} f + K_e \left(\frac{V_1}{4.44 A f N_1}\right)^2 f^2$$

$$= K_h \left(\frac{1}{4.44 A N_1}\right)^{1.6} V_1^{1.6} \left(\frac{1}{f}\right)^{1.6} f + K_e \left(\frac{1}{4.44 A N_1}\right)^2 V_1^2 \left(\frac{1}{f}\right)^2 f^2$$

$$= K_h V_1^{1.6} f^{1-1.6} + K_e V_1^2 \frac{1}{f^2} f^2$$

$$W_i = K_h V^{1.6} f^{-0.6} + K_e V^2 \text{ ---------- (3)}$$

From the above equation it is clear that,

(i) when the supply voltage varies, both hysteresis and eddy current losses varies.

(ii) when the frequency varies, hysteresis losses varies but eddy current losses independent of frequency variations.

Uses or Applications of Two winding (or) Ordinary Transformer:

The two-winding or ordinary transformers are commonly used for

- ✓ Voltage transformation i.e voltage step-up or step-down, particularly in power distribution, industrial equipment, substations, and consumer electronics.
- ✓ Isolating transformer can provide safety by separating healthy circuits from the faulty circuit.

Important Questions (Unit-III)

1(a) Define Transformer. Draw the symbols step up and step down transformer.

(b) Why the transformer core is laminated.

(c) Calculate the maximum efficiency of a 2 KVA transformer at full load, UPF, when the iron losses are 250*w* and full load copper losses are 450*w*.

(d) Define the voltage regulation of transformer and discuss.

(e) Draw the vector diagram of transformer for inductive and capacitive loads.

(f) A transformer with an output voltage of 2200 V is supplied at 220 V. If the secondary winding has 2000 turns, then calculate the number of turns in primary winding.

2(a) Briefly discuss the losses in transformer. Write the condition for maximum efficiency of the transformer.

(b) In a 100 kVA transformer, the iron loss is 450 W and full-load copper loss is 900 W. Find the transformer efficiency at full load and the maximum efficiency of the transformer, where the load power factor is 0.8 lagging.

3(a) Illustrate the effect of variation of frequency and supply voltage on core losses.

(b) A single phase transformer shows 63 W **core losses** at 40 Hz while 110 W at 60 Hz. Both the tests are performed at same value of maximum flux density in the core. Compute the core losses at 50 Hz.

4(a) Explain the operation of 1-Ph transformer on load with neat diagram.

(b) Deduce the expression for EMF induced per turn of 1-Ph transformer.

Unit-IV: Testing of Transformers and Auto Transformer

Syllabus: Open circuit test – short circuit test – Sumpner's test – separation of core losses— Parallel operation with equal and unequal voltage ratios – auto transformer – equivalent circuit – comparison with two winding transformers.

O.C & S.C Tests on 1-Ph Transformer:

Open Circuit (or) No load test: This test is conducted to determine the Iron or Core losses and also to determine the no load shunt branch parameters (R_0 and X_0) of transformer. This test is conducted on LV side of the transformer as shown in fig. 1.

The primary winding (LV side) is connected to a supply voltage V_1 and secondary winding (HV side) is open circuited. By applying the rated voltage as given on name plate detail to primary winding of transformer, measure the value of supply voltage V_1, No load current I_0 and no load power W_0. Since the secondary winding is open and the primary current is low at no load, the copper losses at primary and secondary copper losses are neglected. Therefore, at no load condition the transformer has only core or iron losses and are equal to no load power.

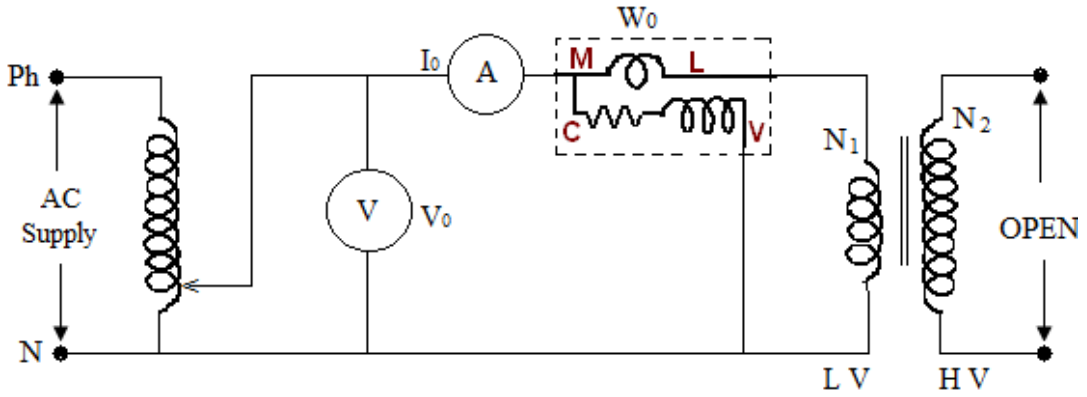

Fig.(1): Opne Ciruit Test on 1-Ph Transformer

From the open circuit test,

let W_0 = No load power = $V_1 I_0 \cos\phi_0$ = Iron losses (W_i)

$\therefore$ No load power factor $\cos\phi_0 = W_0 / V_1 I_0$

Active or Working component of no load current $I_w = I_0 \cos\phi_0$

Reactive or Magnetizing component of no load current $I_\mu = I_0 \sin\phi_0$

$$\therefore \quad R_0 = \frac{V_1}{I_w} \qquad \text{and} \qquad X_0 = \frac{V_1}{I_\mu}$$

Short Circuit Test: This test is conducted to determine the full load copper losses and to find the equivalent resistance and reactance referred to metering side. In this test the secondary winding (L V winding) is short circuited by a thick conductor and primary winding (H V winding) is connected to low voltage, usually 5 % to 7% of rated voltage as shown in fig.2. Since the applied voltage is low so the flux setup in the core is small and therefore, iron losses are small and are neglected.

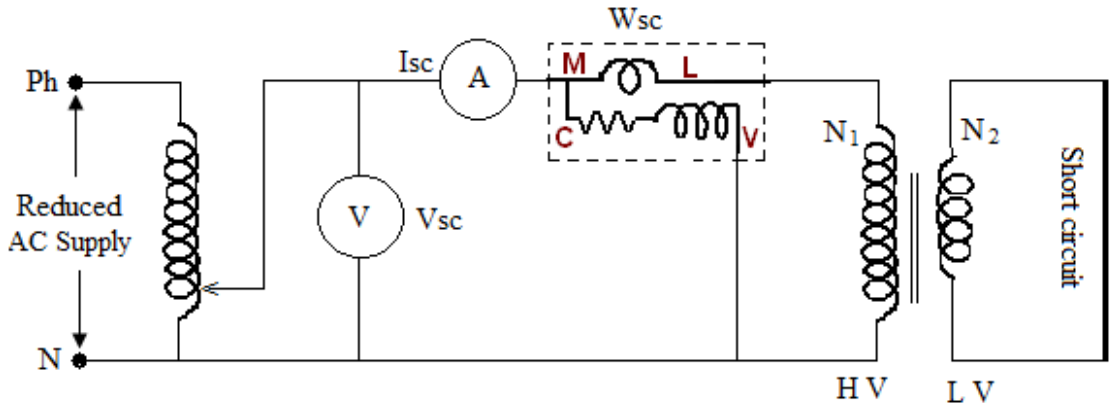

Fig.(2): Short Circuit Test on 1-Ph Transformer

By applying the reduced voltage to primary winding of transformer, measure the value of SC voltage V_{sc}, SC Current I_{sc} and SC Power W_{sc}.

Short Circuit Power $W_{sc} = I_{sc}^2 R_{eq}$ $\qquad R_{eq} = \dfrac{W_{sc}}{I_{sc}^2}$

$$Z_{eq} = \frac{V_{sc}}{I_{sc}} \quad \text{and} \quad X_{eq} = \sqrt{Z_{eq}^2 - R_{eq}^2}$$

Equivalent circuit:

The equivalent circuit of the1-Ph transformer by conducting OC & SC tests is as shown below fig.(3).

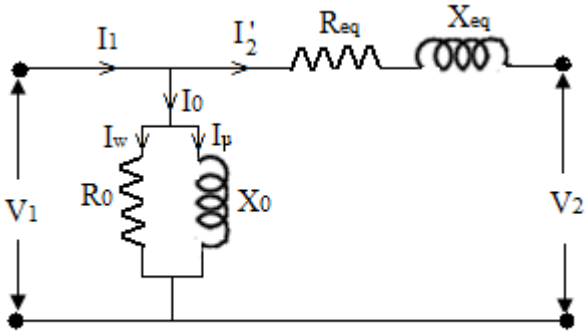

Fig.(3): Equivalent circuit of 1-ph Transformer

***Prob**: The results obtained from OC & SC tests on 5KVA, 200/400V, 50Hz, 1-Ph transformer are*

O.C Test: 400V, 1A, 50W …. H V side *S.C Test: 12V, 10A, 40W …. L V side*

Draw the equivalent circuit. Also find the Effiency and regulation of transformer for (i) 0.8 lag (ii) 0.8 lead and (iii) UPF

Sol: Given that Rating of transformer = 5KVA, Transformation ratio K= V_2/V_1= 200/400 = 0.5

Voltage levels as 400/200V i.e V_1 400V, V_2 = 200V

From OC test : W_0 = 50W, I_0 = 1A and V_1 = 400V

We have the no load lower $W_0 = V_1 I_0 \cos\phi_0$ = Iron losses (W_i)

$\therefore$ No load power factor $\cos\phi_0 = W_0 / V_1 I_0$

$= 50/400x1 = 0.125$

$\phi_0 = \cos^{-1}(0.125) = 82.82^0$; $\sin\phi_0 = 0.992$

Active or Working component of no load current $I_w = I_0 \cos\phi_0$

$= 1x0.125 = 0.125A$

Reactive or Magnetizing component of no load current $I_\mu = I_0 \sin\phi_0$

$= 1x0.992 = 0.992A$

$\therefore R_0 = \frac{V_1}{I_w} = \frac{400}{0.125} = 3200\Omega$ and $X_0 = \frac{V_1}{I_\mu} = \frac{400}{0.992} = 403.23\Omega$

From S C test: V_{sc} =12V, I_{sc} = 10A and W_{sc} = 40W

Full load secondary current $I_2 = \frac{\text{KVA rating of T/F}}{\text{Secondary Voltage}} = \frac{5000}{200} = 25A$

Full load copper losses $W_{cu} = (\frac{I_2}{I_{sc}})^2 W_{sc} = (\frac{25}{10})^2 40$ = 250W

Short Circuit Power $W_{sc} = I_{sc}^2 R_{02}$ ——— $R_{02} = \frac{W_{sc}}{I_{sc}^2} = \frac{40}{10^2} = 0.4\Omega$

$Z_{02} = \frac{V_{sc}}{I_{sc}} = \frac{12}{10} = 1.2\Omega$ and $X_{02} = \sqrt{Z_{02}^2 - X_{02}^2} = \sqrt{1.2^2 - 0.4^2} = 1.13\Omega$

Total resistance and reactance referred to primary is

$R_{01} = \frac{R_{02}}{K^2} = \frac{0.4}{0.5^2} = 1.6\Omega$ and $X_{01} = \frac{X_{02}}{K^2} = \frac{1.13}{0.5^2} = 4.52\Omega$

Equivalent circuit of given transformer is

(i) For 0.8 *lag* power factor i.e $\cos\phi = 0.8 \rightarrow \sin\phi = 0.6$

$$\therefore \text{Effiency } (\eta) = \frac{\text{Output Power}}{\text{Input Power}} = \frac{x\,(\text{Rating of transformer})\cos\phi}{x\,(\text{Rating of transformer})\cos\phi + \text{Iron losses} + x^2\,\text{Copper losses}}$$

$$= \frac{1(5000)0.8}{1(5000)0.8 + 50 + 1^2\,(250)} = 0.9302$$

$$= 93.02\%$$

$$\%\text{ age Voltage Regulation} = \frac{I_2 R_{02}\cos\phi_2 + I_2 X_{02}\sin\phi_2}{E_2} x100$$

$$= \frac{25*0.4*0.8 + 25*1.13*0.6}{200} x100 = 12.48\%$$

(ii) For 0.8 *lead* power factor i.e $\cos\phi = 0.8 \rightarrow \sin\phi = 0.6$

$$\therefore \text{Effiency } (\eta) = \frac{\text{Output Power}}{\text{Input Power}} = \frac{x\,(\text{Rating of transformer})\cos\phi}{x\,(\text{Rating of transformer})\cos\phi + \text{Iron losses} + x^2\,\text{Copper losses}}$$

$$= \frac{1(5000)0.8}{1(5000)0.8 + 50 + 1^2\,(250)} = 0.9302 = 93.02\%$$

$$\% \text{ age Voltage Regulation} = \frac{I_2 R_{02} \cos\phi_2 - I_2 X_{02} \sin\phi_2}{E_2} x100$$

$$= \frac{25*0.4*0.8 - 25*1.13*0.6}{200} x100$$

$$= -4.475\ \%$$

(iii) For UPF power factor i.e $\cos\phi = 1 \rightarrow \sin\phi = 0$

$$\therefore \text{ Effiency } (\eta) = \frac{\text{Output Power}}{\text{Input Power}} = \frac{x\,(\text{Rating of transformer})\cos\phi}{x\,(\text{Rating of transformer})\cos\phi + \text{Iron losses} + x^2\,\text{Copper losses}}$$

$$= \frac{1(5000)01}{1(5000)1 + 50 + 1^2\,(250)}$$

$$= 94.34\ \%$$

$$\% \text{ age Voltage Regulation} = \frac{I_2 R_{02} \cos\phi_2 \pm I_2 X_{02} \sin\phi_2}{E_2} x100$$

$$= \frac{25*0.4*1 \pm 25*1.13*0}{200} x100 = 4\ \%$$

Separation of iron or core loss test:

For separation of core loss, the no load test is performed on the transformer. During this test, the supply voltage and frequency varies so that V/f is kept as constant. The connection diagram for measurement of iron losses is as shown below.

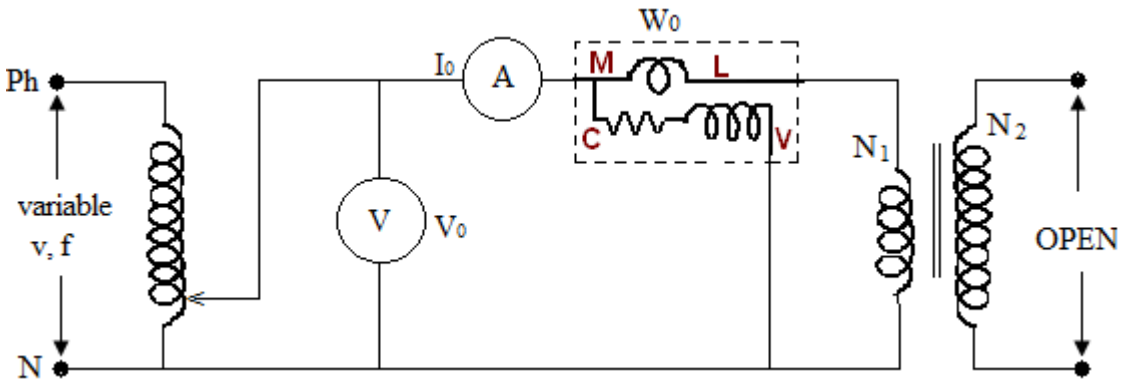

The wattmeter measures the total losses i.e both copper losses and iron losses. Since the secondary winding of the transformer is on open circuit and the current passing through the primary of the transformer is very low, the copper losses may thus be neglected. Hence the power input to the transformer is only to meet the iron losses which are Hysteresis loss and eddy current loss.

i.e $W_i = W_h + W_e$

but hysteresis losses $W_h = K_h B_m^{1.6} f\ v$ and $W_e = K_e B_m^2 f^2 v^2 t^2$

where B_m = the maximum flux density, f = supply frequency and v = volume of T/F core in m^2

$$W_i = K_h B_m^{1.6} f\ v + K_e B_m^2 f^2 v^2 t^2 \qquad \text{------ (1)}$$

For given max. flux density, the hysteresis losses varies directly as frequency and eddy current losses varies directly as square of the frequency i.e

$W_h \alpha f$ or $W_h = A f$ and

$W_e \alpha f^2$ or $W_e = B f^2$ where A, B are the constants

$\therefore$ Iron losses $W_i = A f + B f^2$ ---------- (2)

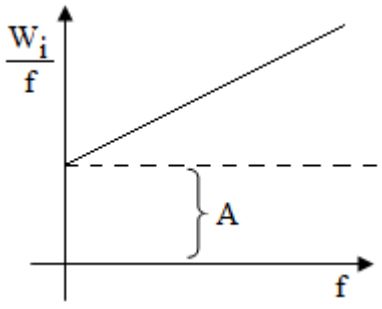

From equation (2), $W_i = (A + B f) f$

$$W_i / f = (A + B f) \quad \text{---------- (3)}$$ B

now

draw the plot between W_i / f for various values of frequency f, it shows a straight line as shown below

The intercept of straight line on the vertical axis gives A

and slop of line gives B.

Sumpner's test or back to back test:

The O.C and S.C test is conducted on 1-ph T/F whose transformer rating is small or large to determine T/F performance. But when the T/F is operating on full load, it is not possible to find the temperature rise in transformers. Now the rise in temperature in transformer can be determined by conducting Sumpner's or back-to-back test. This test requires two identical transformers viz., T/F_1 and T/F_2. The circuit diagram for sumpner's or back-to-back test is as shown in fig.4. The primary windings of two T/Fs are connected in parallel across A.C supply and secondaries of both T/F are connected in series opposition.

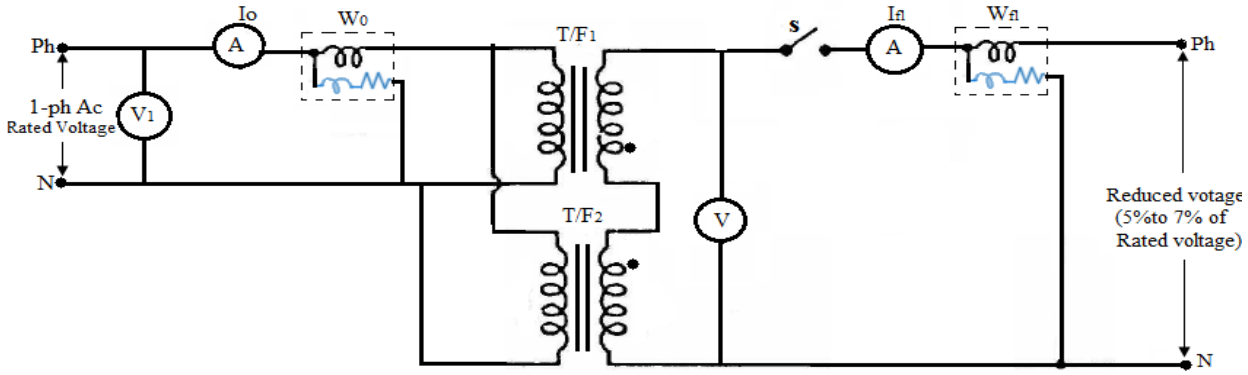

Fig (4): Connection diagram for sumpner's test

When the switch S is open, the watt meter and ammeter reads no load power and current consumed by both T/Fs respectively for the given rated voltage i.e

$$\text{No load current of each T/F} = \frac{Ammeter\ reading}{2} = \frac{Io}{2}$$

$$\text{No load power of each T/F} = \frac{wattmeter\ reading}{2} = \frac{Wo}{2} = Iron\ losses$$

When the switch S is closed, the watt meter reads full load power by both T/Fs respectively for the given rated current i.e

Full load voltage = V_{fl}

Full load power of each T/F $= \frac{\text{wattmeter reading}}{2} = W_{fl} = \text{Full load copper losses}$

At *x* load, % Effiency (η_x) = $\frac{x\,(\text{Rating of transformer})\cos\phi}{x\,(\text{Rating of transformer})\cos\phi + \text{Iron losses} + x^2\,\text{Copper losses}} \times 100$

***Reasons or necessity* for parallel Operation:**

i. It is impractical and uneconomical to have a single large transformer for heavy and large loads. Hence, it will be a wise decision to connect a number of transformers in parallel.
ii. In substations, the total load required may be supplied by an appropriate number of the transformer of standard size. As a result, this reduces the spare capacity of the substation.
iii. If the transformers are connected in parallel, so there will be scope in future, for expansion of a substation to supply a load beyond the capacity of the transformer already installed.
iv. If there will be any breakdown of a transformer in a system of transformers connected in parallel, there will be no interruption of power supply.
v. If any of the transformers from the system is taken out of service for its maintenance and inspection, there is no disturbance in the continuity of the supply.

Parallel Operation of 1-ph Transformer:

(i) With equal turns ratio (or) voltage ratio:

Two transformers are said to be in parallel, if the primaries of both T/Fare connected to a common voltage source and secondaries are connected to a common load. *Conditions* for parallel operation:

i. The polarities of both transformers should be same.
ii. The turn's ratios of both transformers are same.
iii. At full load, the voltage drop across secondary impedances of both transformer should be same
iv. X/R ratio of both transformers should be same.

Fig.5 shows two single-phase equal voltage ratio transformers A and B in parallel. The secondary EMFs of the two transformers are equal (i.e., $E_{2A} = E_{2B}$) because they have the same turns ratio and their primaries connected to the same supply.

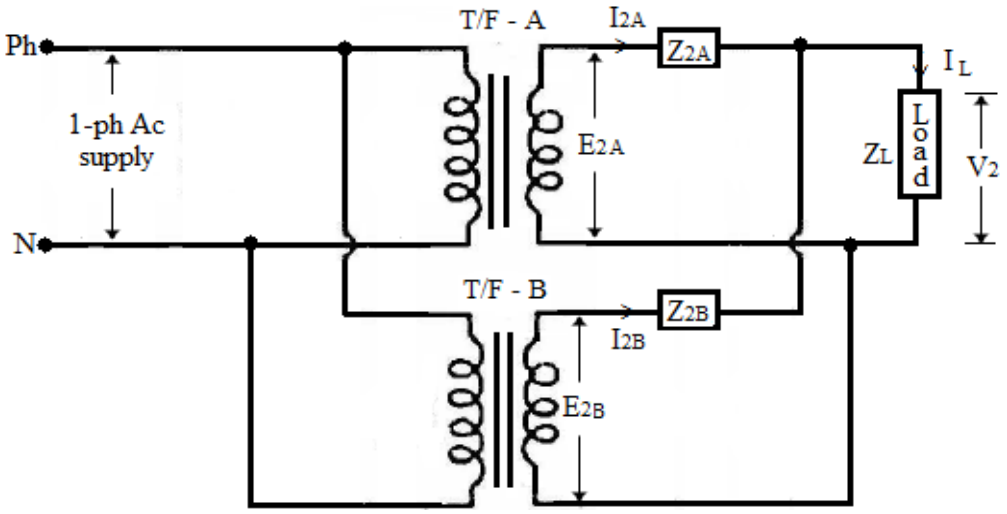

Fig(5): Parallel Operation of T/Fs with equal voltage ratios

Let

Z_{2A}, Z_{2B} = Impedances of transformers A & B referred to secondary

I_{2A}, I_{2B} = Secondary currents of transformers A & B

V_2 = Voltage across load or Terminal voltage = $I_L Z_L$

I_L = Total load current $I_L = I_{2A} + I_{2B}$

$\therefore \quad I_{2B} = I_L - I_{2A}$

from above figure

$$E_{2A} = V_2 + I_{2A} Z_{2A} \quad \text{---------- (1)}$$

$$E_{2B} = V_2 + I_{2B} Z_{2B}$$

$$= V_2 + (I_L - I_{2A}) Z_{2B} \quad \text{---------- (2)}$$

From equations (1) & (2)

$$E_{2A} - E_{2B} = V_2 + I_{2A} Z_{2A} - (V_2 + (I_L - I_{2A}) Z_{2B})$$

$$0 = I_{2A} Z_{2A} - I_L Z_{2B} + I_{2A} Z_{2B} \quad \text{(since } E_{2A} = E_{2B})$$

$$0 = I_{2A} (Z_{2A} + Z_{2B}) - I_L Z_{2B}$$

$$I_{2A}(Z_{2A} + Z_{2B}) = I_L Z_{2B} \rightarrow \mathbf{I_{2A}} = I_L \frac{Z_{2B}}{Z_{2A} + Z_{2B}}$$

Similarly $\mathbf{I_{2B}} = I_L \frac{Z_{2A}}{Z_{2A} + Z_{2B}}$

$$\frac{I_{2A}}{I_{2B}} = \frac{\cancel{I_L} \dfrac{Z_{2A}}{\cancel{Z_{2A} + Z_{2B}}}}{\cancel{I_L} \dfrac{Z_{2B}}{\cancel{Z_{2A} + Z_{2B}}}}$$

$\frac{I_{2A}}{I_{2B}} = \frac{Z_{2B}}{Z_{2A}}$ i.e the load current shared by the transformer is inversely proportional to its impedance.

Multiply I_{2A} with secondary terminal voltage V_2, we get

$$V_2 I_{2A} = V_2 I_L \frac{Z_{2B}}{Z_{2A} + Z_{2B}}$$

$$\text{KVA rating of T/F - A} = \text{Load shared by the T/F - A} = \text{Load KVA} \frac{Z_{2B}}{Z_{2A} + Z_{2B}}$$

Similarly

$$\text{KVA rating of T/F - B} = \text{Load shared by the T/F - B} = \text{Load KVA} \frac{Z_{2A}}{Z_{2A} + Z_{2B}}$$

$$\frac{\text{Load KVA shared by T/F - A}}{\text{Load KVA shared by T/F - B}} = \frac{\cancel{\text{Load KVA}} \dfrac{Z_{2B}}{\cancel{Z_{2A} + Z_{2B}}}}{\cancel{\text{Load KVA}} \dfrac{Z_{2A}}{\cancel{Z_{2A} + Z_{2B}}}}$$

$$\frac{\text{Load KVA shared by T/F-A}}{\text{Load KVA shared by T/F-B}} = \frac{Z_{2B}}{Z_{2A}}$$

i.e the load shared by the transformer is inversely proportional to its impedances.

(ii) With unequal turns ratio (or) voltage ratio:

Two transformers are said to be in parallel, if the primaries of both T/Fare connected to a common voltage source and secondaries are connected to a common load. Conditions for parallel operation:

i. The polarities of both transformers should be same.
ii. The turn's ratios of both transformers are same.
iii. At full load, the voltage drop across secondary impedances of both transformer should be same
iv. X/R ratio of both transformers should be same.

Fig.6 shows two single-phase equal voltage ratio transformers A and B in parallel. The secondary EMFs of the two transformers are not equal (i.e., $E_{2A} \neq E_{2B}$) because they don't have the same turns ratio.

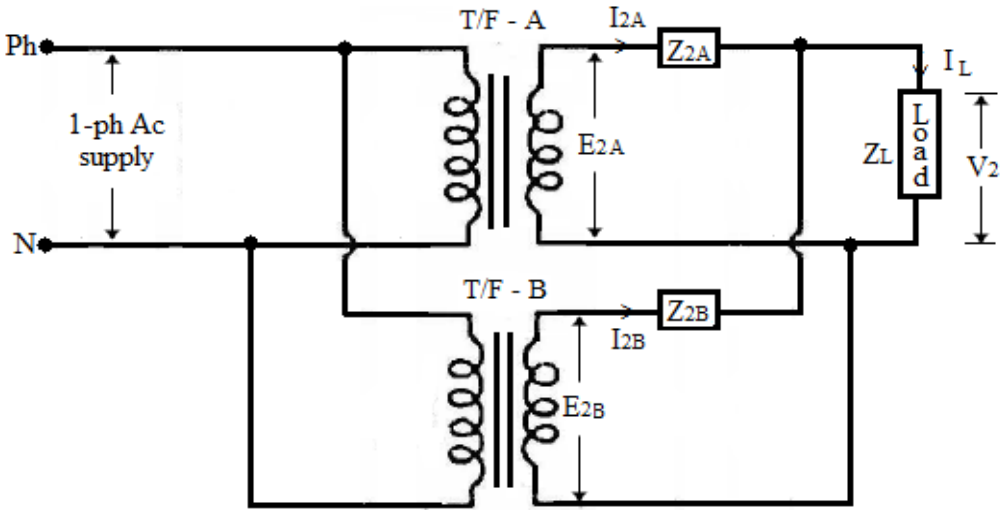

Fig(6): Parallel Operation of T/Fs with unequal voltage ratios

Let

Z_{2A}, Z_{2B} = Impedances of transformers A & B referred to secondary

I_{2A}, I_{2B} = Secondary currents of transformers A & B

V_2 = Voltage across load or Terminal voltage = $I_L Z_L$

I_L = Total load current $I_L = I_{2A} + I_{2B}$

$\therefore \; I_{2B} = I_L - I_{2A}$

from above figure

$E_{2A} = (I_{2A} + I_{2B})Z_L + I_{2A} Z_{2A}$ ---------- (1)

$E_{2B} = (I_{2A} + I_{2B})Z_L + I_{2B} Z_{2B}$ ---------- (2)

From equations (1) & (2)

$$E_{2A} - E_{2B} = (I_{2A} + I_{2B})Z_L + I_{2A} Z_{2A} - ((I_{2A} + I_{2B})Z_L + I_{2B} Z_{2B})$$

$$= \cancel{(I_{2A} + I_{2B})Z_L} + I_{2A} Z_{2A} - \cancel{(I_{2A} + I_{2B})Z_L} - I_{2B}Z_{2B}$$

$$= I_{2A} Z_{2A} - I_{2B} Z_{2B}$$

$$(E_{2A} - E_{2B}) + I_{2B} Z_{2B} = I_{2A} Z_{2A}$$

$$\mathbf{I_{2A}} = \frac{(E_{2A} - E_{2B}) + I_{2B} Z_{2B}}{Z_{2A}}$$

Submitting this I_{2A} in eq.(2) and simplifying, we get

$$E_{2B} = \left(\frac{(E_{2A} - E_{2B}) + I_{2B} Z_{2B}}{Z_{2A}} + I_{2B}\right)Z_L + I_{2B} Z_{2B}$$

Current shared/delivered by TF-B, $I_{2B} = \frac{E_{2B}Z_{2A} - (E_{2A} - E_{2B})Z_L}{Z_{2A}Z_{2B} + Z_L(Z_{2A} + Z_{2B})}$

Similarly,

Current shared/delivered by TF-A, $I_{2A} = \frac{E_{2A}Z_{2B} + (E_{2A} - E_{2B})Z_L}{Z_{2A}Z_{2B} + Z_L(Z_{2A} + Z_{2B})}$

Load current, $I_L = I_{2A} + I_{2B} = \frac{E_{2A}Z_{2B} + (E_{2A} - E_{2B})Z_L}{Z_{2A}Z_{2B} + Z_L(Z_{2A} + Z_{2B})} + \frac{E_{2B}Z_{2A} - (E_{2A} - E_{2B})Z_L}{Z_{2A}Z_{2B} + Z_L(Z_{2A} + Z_{2B})}$

$$= \frac{E_{2A}Z_{2A} + E_{2B}Z_{2B}}{Z_{2A}Z_{2B} + Z_L(Z_{2A} + Z_{2B})}$$

The circulating current (I_C) = $\frac{E_{2A} - E_{2B}}{Z_{2A} + Z_{2B}}$

Two transformers A and B are joined in parallel to the same load. Determine the current delivered by each transformer having given : open-circuit e.m.f. 6600 V for A and 6,400 V for B. Equivalent leakage impedance in terms of the secondary = 0.3 + j3 for A and 0.2 + j1 for B. The load impedance is 8 + j6.

Auto Transformer:

An autotransformer has a single winding on common magnetic core and a part of winding is common to both the primary and secondary circuits. Fig.7(a) shows the connections of a step-down autotransformer whereas Fig.7(b) shows the connections of a step-up autotransformer. Here the primary and secondary windings are connected electrically as well as magnetically. Therefore, power from the primary is transferred to the secondary conductively as well as inductively.

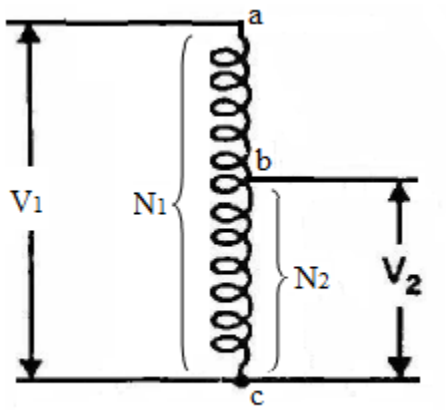

Fig. 7 (a) Step down Auto transformer

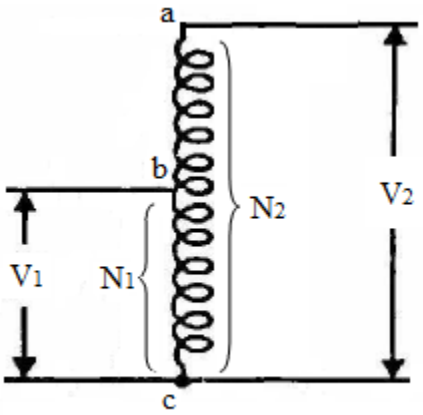

Fig. 7(b) Step up Auto transformer

Theory of Autotransformer

Fig. (8) shows an ideal step-down autotransformer. Here the winding *ac* having N_1 turns is the primary winding and winding *bc* having N_2 turns is the secondary winding. The input current is I_1 while the output or load current is I_2. The portion *ab* of the winding has $N_1 - N_2$ turns and voltage across this

portion of the winding is $V_1 - V_2$. The current through the common portion of the winding is $I_2 - I_1$.

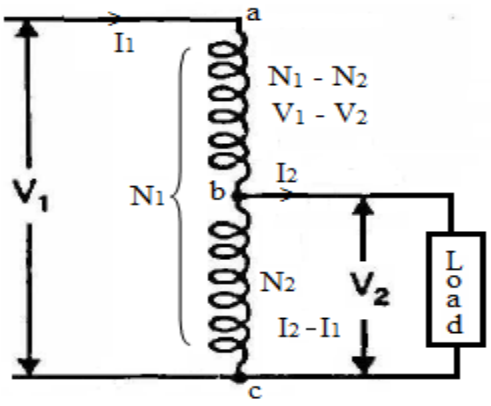

Fig.8 Step down Auto transformer

From the circuit

$$\frac{V_2}{V_1 - V_2} = \frac{N_2}{N_1 - N_2}$$

$$V_2(N_1 - N_2) = N_2(V_1 - V_2)$$

$V_2N_1 - V_2N_2 = N_2V_1 - N_2V_2$

$V_2N_1 = N_2V_1$

$\therefore \quad \frac{V_2}{V_1} = \frac{N_2}{N_1}$ ---------- (i)

also

$(V_1 - V_2)\, I_1 = (I_2 - I_1)V_2$

$V_1 I_1 - V_2 I_1 = I_2 V_2 - I_1 V_2$

$V_1 I_1 = I_2 V_2$ i.e Input apparent power = Output apparent power

$\therefore \quad \frac{I_1}{I_2} = \frac{V_2}{V_1}$ ---------- (ii)

From equation (i) and (ii), Transformation Ratio (K) = $\frac{V_2}{V_1} = \frac{N_2}{N_1} = \frac{I_1}{I_2}$

Since the primary and secondary windings of an autotransformer are connected magnetically as well as electrically, the power transferred from primary to the secondary is inductively as well as conductively.

Comparison between Auto Transformer and Two Winding Transformer:

(or)

Advantages and Disadvantages of autotransformer over two wdg transformer:

Advantages:

(i) An auto transformer requires less copper material than a two-winding transformer of similar rating.

(ii) Since the auto transformer requires less copper material, it has smaller in size and cheaper in cost than a two-winding transformer of the same rating.

(iii) Since the auto transformer requires less copper material and core material, the copper and iron losses are less and hence the efficiency of auto transformer is higher than two-winding transformer of similar rating.

(iv) Since one winding is completely eliminated, the resistance and leakage flux of this winding is zero. Hence the auto transformer has better voltage regulation than two-winding transformer of the same rating.

(v) An autotransformer requires less no-load current than a two-winding transformer of the same rating.

Disadvantage:

(i) The effective impedance of an auto transformer is less compared to a 2wdg transformer. This results in large short circuit or full load current.

(ii) If there is any open circuit or break in common winding of auto T/F, the full primary voltage is applied to the load on secondary. This may damage the load seriously.

Uses or Applications of Two winding (or) Ordinary Transformer:

The two-winding or ordinary transformers are commonly used for

- ✓ Voltage transformation i.e voltage step-up or step-down, particularly in power distribution, industrial equipment, substations, and consumer electronics.
- ✓ Isolating transformer can provide safety by separating healthy circuits from the faulty circuit.

Uses or Applications of Auto T.F:

i) Used as booster to boost the voltage in sub-systems, distribution systems etc.

ii) Auto transformers are used as starter to limit the starting current of AC motors like induction motor, synchronous motors etc.

iii) It is used as variac (variable ac) in the laboratory and in industries.

Important Questions (Unit-IV)

1. Explain the procedure for the OC and SC tests on 1-Ph transformer to calculate the efficiency. Also draw its equivalent circuit.

2(a) Explain Sumpner's method of testing transformers. Mention its advantages.

(b) List the advantages and disadvantages of an Autotransformer.

3. A 10 kVA, 200/400V, 50Hz single phase transformer gave the following result.

O.C test: 200V, 1.3A, 120W ..... LV side; *S.C test*: 22V, 30A, 200W .....HV side

Calculate the efficiency at 50% full load, 0.8 pf. Determine the regulation at 0.8 p.f lag and lead. Also draw the equivalent circuit.

4. What are reasons for parallel operation. Explain the conditions for proper parallel operation of two 1-Ph transformers. Prove that the total load on a group of paralleled transformers is distributed among them in proportion to their inverse impedance values.

5 (a) Write a short note on Autotransformer. Mention its uses.

(b) Two 300 KVA, single-phase transformers are connected in parallel. Transformer A has an impedance of $(0.009+j0.03)\Omega$, while Transformer B has an impedance of $(0.01+j0.04)\Omega$. If the total load is 600 kVA and operating at a power factor of 0.8lagging. Determine the load shared by each transformer and its operating power factors. Also comment on the results.

Unit-V: Three Phase Transformers

Syllabus: Polyphase connections- Y/Y, Y/Δ, Δ/Y, Δ/Δ, open Δ and Vector groups – third harmonics in phase voltages – three winding transformers – transients in switching – off load and on load tap changers – Scott connection.

Three transformer connections:

There are various methods available for transforming the 3-ph voltages to higher or lower the 3-ph voltages. The most common 3-ph connections are (i) Star-Star (Y-Y) connection, (ii) Delta-Delta (Δ-Δ) connection, (iii) Star-Delta (Y-Δ) connection, (iv) Delta-Star (Δ-Y) connection, (v) Open-Delta or V-V connection, and (vi) Scott connection or T-T connection.

Star - Star (Y-Y) connection:

In Star-Star connection, both primary and secondary of 3-Ph transformer are connected in star as shown in figure. Because of star connection, number of required turns/phase is reduced (as phase voltage in star connection is $1/\sqrt{3}$ times of line voltage only). Thus, the amount of insulation required is also reduced.

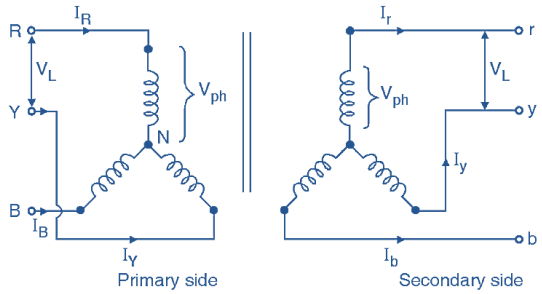

The ratio of line voltages on the primary side and the secondary side is equal to the transformation ratio of the transformers. Line voltages on both sides are in phase with each other. This connection is applicable only if the connected **load is balanced** and also used for small, high-voltage transformers.

Delta-Delta (Δ-Δ) connections:

In Delta - Delta connection, both primary and secondary of 3-Ph transformer are connected in delta as shown in figure. This connection is generally used for large, low-voltage transformers. Number of required phase/turns is relatively greater than that for star-star connection.

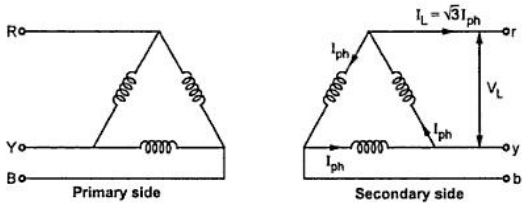

The ratio of line voltages on the primary and the secondary side is equal to the transformation ratio of the transformers. This connection is applicable even for unbalanced loading. Another advantage of this type of

connection is that even if one transformer is disabled, system can continue to operate in open delta connection but with reduced available capacity.

***Star-Delta (Y-Δ) connection*:** A star-delta connection involves a primary winding connected in a star (Y) configuration and a secondary winding in a delta (Δ) configuration.

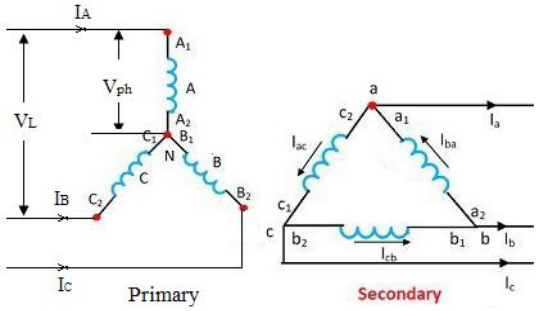

Star - Delta Connection of Transformer

At primary, the line voltage is √3 time the phase voltage, but the line current is equal to the phase current. At secondary, the line voltage is equal to the phase voltage, but the line current is √3 time the phase current. The secondary voltage is typically shifted by ±30° relative to the primary voltage.

Advantages:

1. Since the primary is star connected, it reduces the voltage stress on the windings, which lowers the required insulation and makes the transformer more economical.
2. The delta-connected secondary winding can handle unbalanced loads, making it well-suited for industrial applications.
3. The delta secondary winding allows third-harmonic currents to circulate within its closed loop, preventing them from appearing in the output voltage and distorting the waveform.

Disadvantages:

1. This connection requires specialized knowledge for troubleshooting and maintenance.
2. This type of connection will increase the overall cost compared to simpler configurations.

Use/Applications:

1. The star-delta connection is used to step down voltage at the end of transmission lines for distributing the power to industrial or residential customers.
2. This connection is useful for supplying both three-phase and single-phase loads in distribution networks.

***Delta-Star (Δ-Y) connection*:** A delta-star (Δ-Y) connection for a three-phase transformer uses a delta configuration for the primary and a star configuration for the secondary.

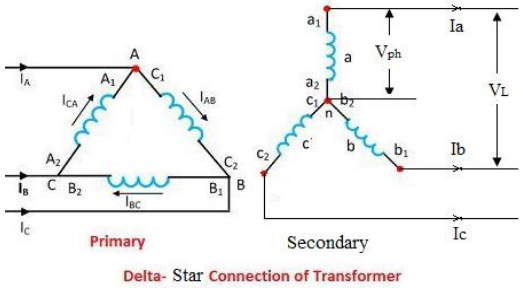

Delta- Star Connection of Transformer

At primary, the line voltage equals the phase voltage, and the line current is √3times the phase current. At secondary, the voltage equals √3times the phase voltage, and the line current is equal the phase current. The secondary voltage leads the primary voltage by 30°.

Advantages:

1. The star-connected secondary provides a neutral point, this helps for supplying power to both three-phase loads and single-phase loads.

2. This is the most common used configuration, as it is highly effective for stepping down voltage for distribution to consumers.

Disadvantages:

1. The delta primary has a higher insulation requirement compared to a star-connected winding.

Use/Applications:

1. The configuration will step down the high transmission voltages to lower distribution voltages for residential, commercial, and industrial areas.

2. They supply power to industrial facilities that require both three-phase power for heavy machinery and single-phase power for lighting and other equipment.

Open delta or V-V connection:

If one transformer of delta-delta connected transformer bank is damaged or opened, then rest of the system will continue to supply the 3-phase power. If this damaged transformer is isolated, the remaining two transformers will function as a 3-phase bank with rating reduced to about 57.7 % that of the original delta-delta bank. This type of arrangement is known as open delta or V-V connection. If V_{2L} and I_{2L} are the rated secondary voltage and rated secondary current respectively of the delta-delta connected transformer. Then, the line current to the load of a delta connected system is $\sqrt{3}I_{2ph}$.

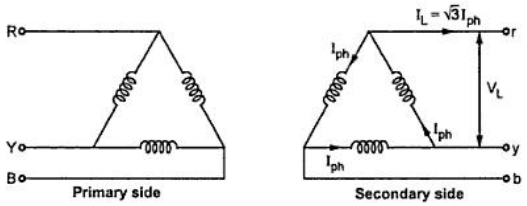

Therefore, the load VA carried by normal delta ($S_{\Delta-\Delta}$) = $\sqrt{3}\times V_{2L}\times I_{2L} = \sqrt{3}\times V_{2ph}\times(\sqrt{3}I_{2ph}) = 3V_{2ph}I_{2ph}$

Now, one transformer is removed, the delta-delta connection becomes open-delta connection and the lines are in series with the windings of the transformer. Thus, the secondary line currents is equal to the rated secondary current.

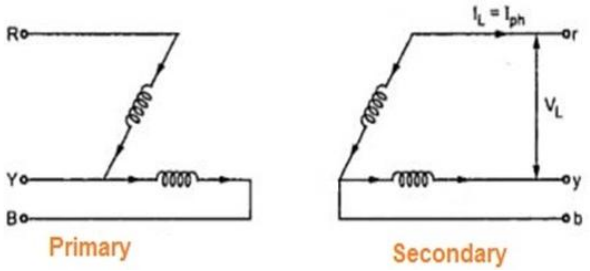

Therefore, the load VA carried by the open-delta (S_{V-V}) = $\sqrt{3}\times V_{2L}\times I_{2L} = 3V_{2ph}I_{2ph}$

$$\frac{S_{V-V}}{S_{\nabla-\nabla}} = \frac{\sqrt{3}V_{2ph}I_{2ph}}{3V_{2ph}I_{2ph}} = \frac{1}{\sqrt{3}} = 0.577$$

Hence, the load carried by an open-delta transformer is 57.7 % of the load carried by the delta-delta transformer.

Uses/applications: The V-V connected transformers are used to supply a combination of 1-phase and smaller 3-phase loads.

***Scott or T-T Connection*:**

The Scott-T Connection is the method of connecting two similar 1-Ph transformer to convert the 3-ph supply to 2-ph supply and vice-versa. The two transformers are connected electrically but not magnetically. One of the transformers is called the main transformer, and the other is called the auxiliary or teaser transformer. The figure below shows the Scott-T transformer connection.

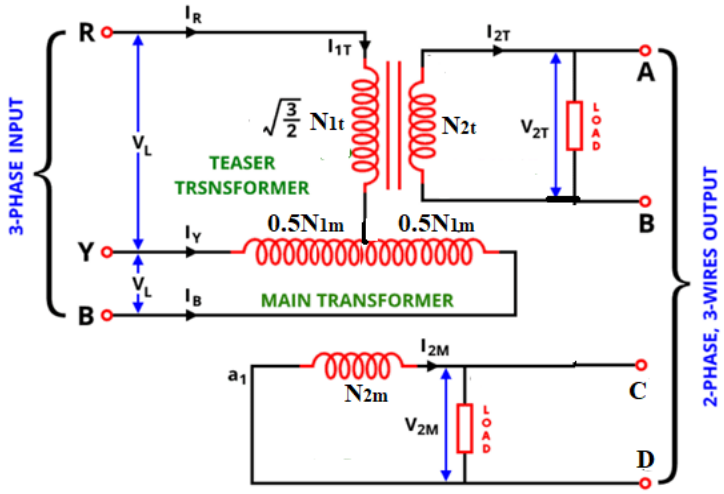

The main transformer is a center-tapped transformer with a 1:1 ratio, teaser transformer has a ratio of √3/2:1. The primary of the main transformer is centre tapped at D and the primary of the teaser transformer is connected to the centre tapping D.

Advantages:

1. The Scott-T connection is used in an electric furnace which draw the balanced load from the three-phase supply.
2. It is used to supply the single-phase loads such as electric train.

Three-winding Transformer:

Sometimes in high rating transformer, the third winding is constructed in addition to the primary and the secondary windings. The third winding is called the tertiary winding, and because of the three windings, the transformer is called the three winding transformer. The voltage ratings of all the three windings of the transformer are usually unequal. The primary winding has the highest voltage rating; the tertiary has the lowest voltage rating, and the secondary has the intermediate voltage rating. The schematic diagram of a three-phase transformer is shown in the figure below.

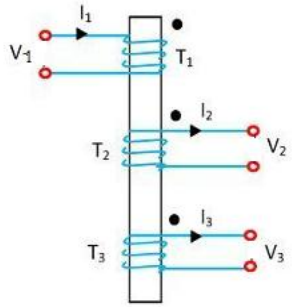

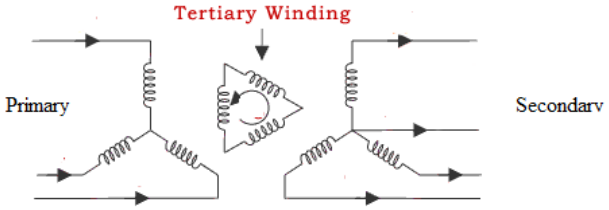

For an ideal transformer, $V_1I_1 = V_2I_2 = V_3I_3$ (or) $V_2/V_1 = I_1/I_2$ and $V_3/V_2 = I_2/I_3$

The third winding in three winding transformer is connected in delta to limit the fault current, multiples of 3rd order harmonics.

3-Ph Transformer Vector group:

A vector group is the method of categorizing the high voltage (HV) windings and low voltage (LV) winding configurations of three-phase transformers. The vector group indicates the windings configurations and the phase angle difference between them.

Ex: Dy11, here D = Delta-connected primary winding; y= Star-connected secondary winding; 11= -330 or 30° phase shift.
The phasor indicating HV winding is used as a reference and set to 12 o'clock. Phase rotation continues to be counterclockwise. Because a clock has 12 hours and a circle is 360°, each hour represents 30°. Thus

Digit 0 = 0° indicates LV is in phase with HV.

Digit 1 = 30° lagging indicates LV lags HV by 30° due to anti-clockwise rotation.

Digit 11 = 330° indicates 330° lagging (or) 30° leading.

Digit 6 = 180° indicates LV lags 180° HV.

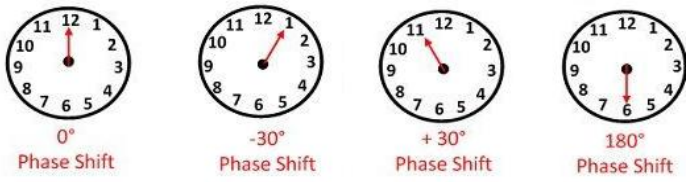

Commonly used vector groups in 3-Ph transformer are

Group-I: 0^0 phase displacement. Ex: Yy0 and Dd0

Group-II: 180° phase displacement. Ex: Yy6 and Dd6

Group–III: -30° phase displacement. Ex: Dy1 and Yd1

Group –IV: + 30° phase displacement. Ex: Dy11 and Yd11

When the primary and secondary windings are coupled in the same manner, the secondary voltage waveforms are in phase with primary waveforms. When the primary and secondary windings are connected in the different manner, the secondary voltage waveform is deviated by 30^0 from primary waveforms.

Use/Application:

The transformer vector group concept is applicable in parallel operation of transformers. Only same group transformers are connected in parallel i.e star-star 3-Ph TF is connected in parallel with another 3-Ph TF whose winding connection is star-star or delta-delta only. A star-star TF cannot be in parallel with either star-delta or delta-star.

Transients in switching:

Switching transients are the high-frequency oscillations in voltage and current that occurs in a transformer when the circuit is abruptly switched on or off. This phenomenon is often called inrush current. The main effects due to switching transients are

(i) High inrush current i.e 10-15 times the normal current for a short duration.

(ii) This high inrush currents create strong electromagnetic forces on the windings and leads to mechanical failure of winding

(iii) If switching transients are along for long period will cause high-frequency voltage oscillations that can degrade the insulation.

Third harmonics in Phase voltage:

In a balanced three-phase, three-wire system, the third harmonics do not exist in the line-to-line voltages or currents. This is because the balanced nature of the system cancels out the third harmonics.
In a balanced three-phase system, the third harmonic has a frequency that is three times the fundamental frequency.
For example, in a 50 Hz system, the fundamental frequency is 50 Hz, and the third harmonic frequency is 150 Hz. However, third harmonics can be present in the phase voltage, especially in a star (Y) connection with a neutral wire or in transformer windings.
The main issues due to 3rd harmonics are

i) Since third harmonic currents are in phase, they add up in the neutral wire, potentially overloading it and creating a fire hazard.

ii) Third harmonics can cause a non-sinusoidal voltage waveform, which can lead to malfunctioning equipment.

iii) The presence of harmonic currents can cause extra losses in transformers, leading to overheating.

iv) Third harmonics can decrease the power factor and cause issues in rotating machines.

The 3rd harmonics can be eliminated by using the harmonic filters and delta-connected tertiary winding on a transformer

Tap changing Transformer:

A tap-changing transformer is device that adjusts output voltage by changing its turns. Generally the tapings are provided at HV winding side of the transformer. Tap changing transformers are used to maintain a stable output voltage irrespective of fluctuations in the input voltage or load. There are two main types: (i) Off-load tap changers and (ii) On-load tap changers.

(i) Off-load tap changer: An off-load tap changer is a transformer that adjusts the voltage by changing the no. of turns on transformer winding manually. This method requires a complete shutdown of power to the transformer. This is a simple manual process and it is commonly used in smaller distribution transformers.

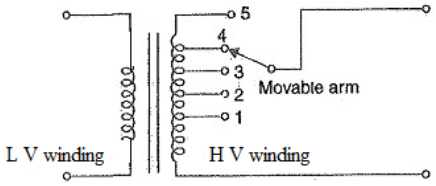

Working:

- The transformer must be completely shut down before the tap changer can be operated.
- An external handle or a switch mechanism is used to manually move a tap selector arm or slider to a different position.
- Each position on the tap changer indicates a different tap on the transformer's windings.
- By changing the no. of turns, the output voltage of the transformer is adjusted to a new level.

(ii) On load tap changers: An on-load tap changer (OLTC) is a transformer that adjusts the output voltage by changing the no. of turns of the winding without interrupting the power supply.

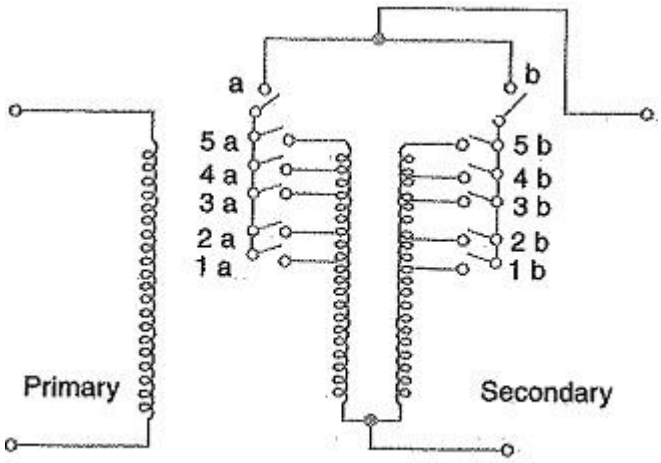

Fig. 15.5

On Load Tap Changing Transformer: In supply system, tap-changing has normally to be performed on load so that there is no interruption to supply. The above Fig. shows connection diagram of on-load Tap Changing Transformers. The secondary consists of two equal parallel winding which have similar tapping 1a….5a and 1b….5b. In the normal working conditions, switches a, b and tapping with the same number remain closed and each secondary winding carries one-half of the total current. Referring to above Fig., the secondary voltage will be maximum when switches a, b and 5a, 5b are closed. However, the secondary voltage will be minimum when switches a, b and primary Secondary 1a, 1b are closed.

Working: Let tapings are at position 4a, 4b and it is desired to alter its position to 5a, 5b. For this purpose, one of the switches a and b, say a, is opened. This takes the secondary winding controlled by switch 'a' out of the circuit. Now, the secondary winding controlled by switch b carries the total current which is twice its rated capacity. Then the tapping on the disconnected winding is changed to 5a and switch a is closed. After this, switch b is opened to disconnect its winding, tapping position on this winding is changed to 5b and then switch b is closed. In this way, tapping position is changed without interrupting the supply. This method has the following disadvantages :

- **During switching, the impedance of transformer is increased and there will be a voltage surge**
- **There are twice as many tapings as the voltage steps.**

Important Questions (Unit-V)

1. Illustrate various connections of 3-Ph transformer with neat diagrams.

2 (a) Explain how the Scott connection can be used to obtain 2-Ph supply from a 3-Ph supply?

(b) What is vector grouping. Explain the vector groups commonly used in 3-ph transformers with examples.

3. Explain the working of following tap changing transformers with help of neat diagram.

(a) OFF load tap changing (b) ON load tap changing

4. Explain (a) Third harmonics in phase voltages (b) Three winding transformers.