Course: Electrical Distribution System

Course Code: 23A02GT

Branch(s): Electrical and Electronics Engineering

Prepared by: **Boothapati Anil Kumar**

Designation: **Assistant Professor**

Department: **Electrical and Electronics Engineering**

Department of Electrical & Electronics Engineering

IV B.Tech I Semester

ELECTRICAL DISTRIBUTION SYSTEM (23A02GT)

Course Objectives

- To know the fundamental aspects of distribution systems and the principles of distribution substations.
- To understand the classification of various loads.
- To understand the difference between conventional load flow studies of power systems and distribution system load flow.
- To know about the evaluation of voltage drop and power loss calculations, distribution automation, distribution management systems, and SCADA.

Course Outcomes:

- Understand fundamental aspects of distribution system and various factors affecting the distribution systems. (L2)
- Analysis of substations and modelling of loads (L3).
- Understand difference between conventional load flow studies of power system and distribution system load flow.(L2)
- Evaluation of voltage drop and power loss calculations and capacitor location and cost analysis (L3)
- Analyze the concepts of SCADA, Automation distribution system and management.(L3)

UNIT-I DISTRIBUTION SYSTEM FUNDAMENTALS

Brief description about electrical power transmission and distribution systems, Different types of distribution sub-transmission systems, Substation bus schemes, Factors effecting the substation location, Factors effecting the primary feeder rating, types of primary feeders, Factors affecting the primary feeder voltage level, Factors effecting the primary feeder loading.

UNIT-II DISTRIBUTION SYSTEM SUBSTATIONS AND LOADS

Substations: Rating of a distribution substation for square and hexagonal shaped distribution substation, Service area with —n primary feeders, K constant, Radial feeder with uniformly and non-uniformly distributed loading. Benefits derived through optimal location of substations. Loads: Various types of loads, Definitions of various terms related to system loading, Distribution transformer loading, feeder loading, Relationship between the Load Factor and Loss Factor, Modeling of star and delta connected loads.

UNIT-III DISTRIBUTION SYSTEM LOAD FLOW

Exact line segment model, modified line model, approximate line segment model, Step-Voltage Regulators, Line drop compensator, Forward/Backward sweep distribution load flow algorithm– Numerical problems.

UNIT-IV VOLTAGE DROP AND POWER LOSS CALCULATION

Analysis of non-three phase primary lines, concepts of four-wire multi-grounded common-neutral distribution system, Percent power loss calculation, Distribution feeder cost calculation methods, Capacitor

installation types, Series and Shunt Capacitors, Types of three-phase capacitor-bank connections, Procedure for best capacitor location, Economic justification for capacitors – Numerical problems.

UNIT-V DISTRIBUTION AUTOMATION

Distribution automation, distribution management systems, distribution automation system functions, Basic SCADA system, Consumer Information Service (CIS) – Geographical Information System (GIS) – Automatic Meter Reading (AMR), Outage management, decision support applications, substation automation, control feeder automation.

Textbooks:

1. Distribution System Modeling and Analysis, William H.Kersting, CRC Press, Newyork, 2002.

2. Electric Power Distribution System Engineering, Turan Gonen, McGraw-HillInc., New Delhi, 1986.

Reference Books:

1. Control and automation of electrical power distribution systems, James Northcote-Green and Robert Wilson, CRC Press (Taylor & Francis), New York, 2007.

OnlineLearningResources:.https://onlinecourses.nptel.ac.in/noc22_ee126/preview

UNIT-1

DISTRIBUTION SYSTEM FUNDAMENTALS

INTRODUCTION

The distribution system is that part of the electric utility system between the bulk power source and the customers' service switches. This definition of the distribution system includes the following components:

1, Subtransmission system

2. Distribution substations

3.Distribution or primary feeders

4. Distribution transformers

5. Secondary circuits

6. Service drops

The distribution system as that part of the electric utility system between the distribution substations and the consumers' service entrance.

Figure 1 shows a one-line diagram of a typical distribution system. The subtransmission circuits deliver energy from bulk power sources to the distribution substations. The subtransmission voltage is somewhere between 12.47 and 245 kV. The distribution substation, which is made of power transformers together with the necessary voltage-regulating apparatus, buses, and switch. gear, reduces the subtransmission voltage to a lower primary system voltage for local distribution.'The three-phase primary feeder, which is usually operating in the range of 4.16-34.5 KV, distributes energy from the low-voltage bus of the substation to its load center where it branches into three-phase subfeeders and single laterals.

Distribution transformers, in ratings from 10 to 500 kVA, are usually connected to each primary feeder, subfeeders, and laterals. They reduce the distribution voltage to the utilization voltage. The secondaries facilitate the path to distribute energy from the distribution transformer to consumers through service drops.

SUBTRANSMISSION

The subtransmission system is that part of the electric utility system which delivers power from bulk power sources, such as large transmission substations. The subtransmission circuits may bemade of overhead open-wire construction on wood poles or of underground cables. The voltage of these circuits varies from 12.47 to 245 kV, with the majority at 69-, 115-, and 138-kV voltage levels. There is a continuous trend in the usage of the higher voltage as a result of the increasing use of higher primary voltages.

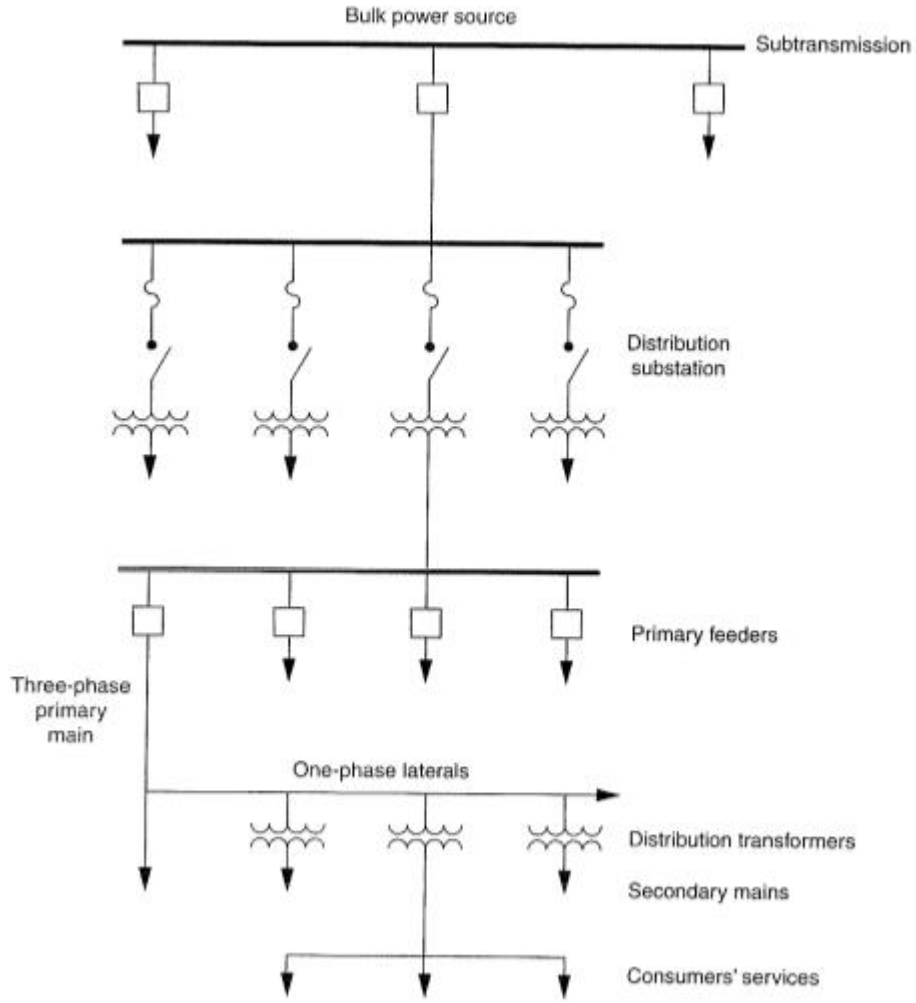

Figure.1 One-line diagram of a typical distribution system

The subtransmission system designs vary from simple radial systems to a subtransmission net- work. The major considerations affecting the design are cost and reliability.

Figure 2 shows a radial subtransmission system. In the radial system, as the name implies, the circuits radiate from the bulk power stations to the distribution substations. The radial system is simple and has a low first cost but it also has a low service continuity. Because of this reason, the radial system is not generally used. Instead, an improved form of radial-type subtransmission design is preferred, as shown in Figure.3

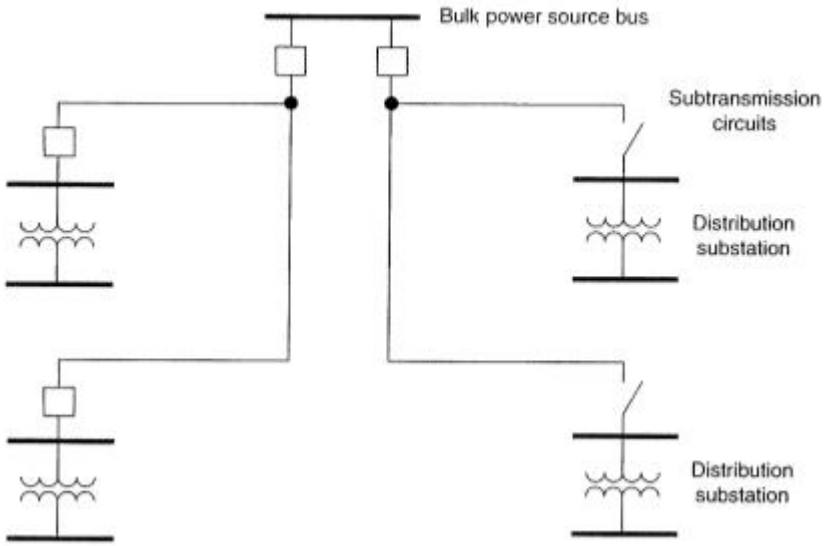

Figure.2 Radaial-type Subtransmission

It allows relatively faster service restoration when a fault occurs on one of the subtransmission circuits.

In general, due to higher service reliability, the subtransmission system is designed as loop cir- cuits or multiple circuits forming a subtransmission grid or network.

Figure.4 shows a loop-typesubtransmission system. In this design, a single circuit originating from a bulk power bus runs through a number of substations and returns to the same bus.

Figure 4.5 shows a grid-type subtransmission which has multiple circuits. The distribution substations are interconnected, and the design may have more than one bulk power source. There- fore, it has the greatest service reliability, and it requires costly control of power flow and relaying. It is the most commonly used form of subtransmission.

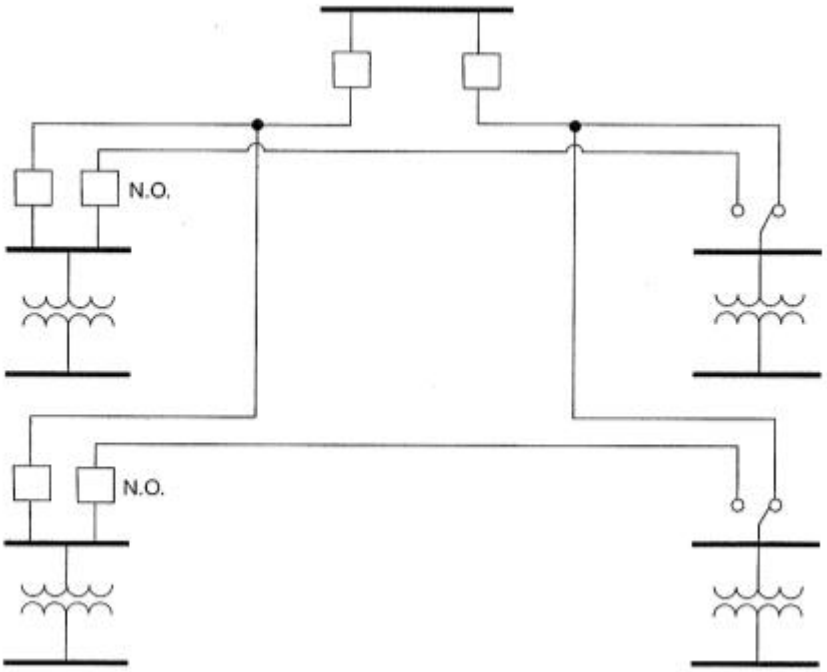

Figure.3 Improved from of radial-type Subtransmission

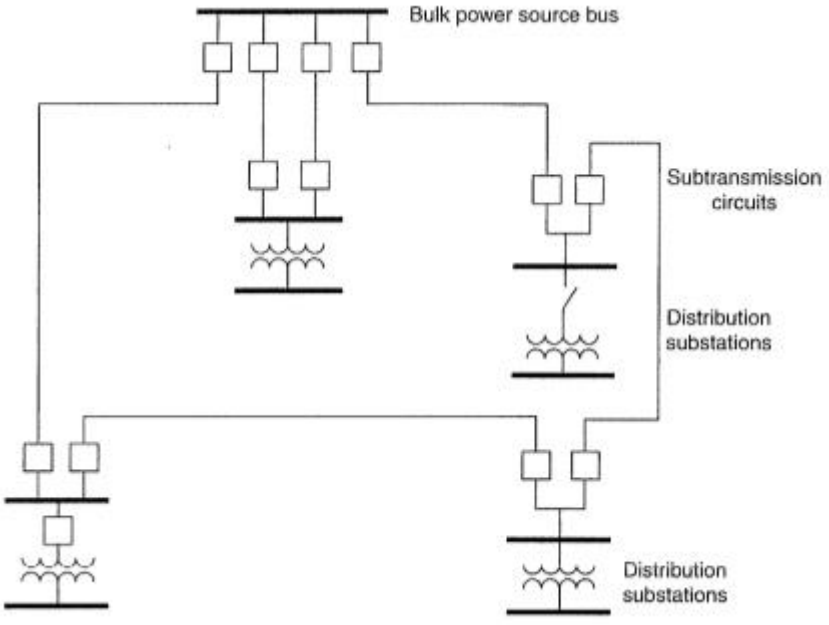

Figure.4 Loop-type Subtransmission

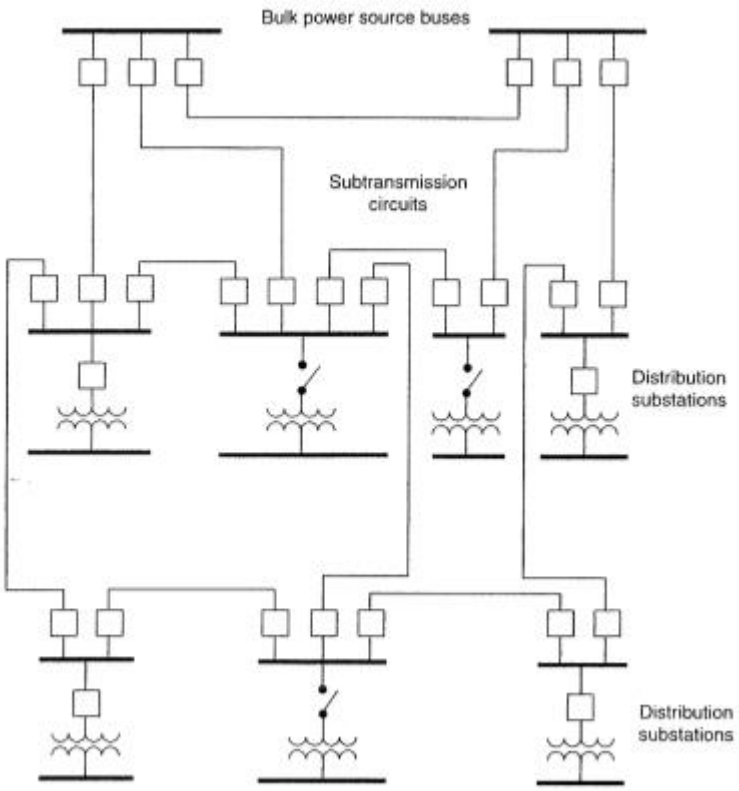

Figure.5 Grid-or network-type Subtransmission

SUBSTATION BUS SCHEMES

The different types of bus bar arrangements are:

1. Single bus bar
2. Single bus bar system with sectionalization
3. Double bus bar with single breaker
4. Double bus bar with two circuit breakers
5. Breakers and a half with two main buses
6. Main and transfer bus bar
7. Double bus bar with bypass isolator
8. Ring bus

1.SINGLE BUS BAR

It consists of a single bus bar and all the incoming and outgoing lines are connected to the same bus bar as shown in Fig.1. Here, the 11 kV incoming lines are connected to the bus bar through isolators and circuit breakers. Three-phase, 400 V and single-phase, 230 V outgoing lines are connected through isolator, circuit breaker, and step-down transformer from the bus bar. This type of arrangement is suitable for DC stations and small AC stations. The major drawback of this system is that, if the fault occurs on any section of the bus bar, the entire bus bar is to be de-energized for carrying out the repair work. So, this results in a loss of continuity of service of all feeders. Similarly, the periodical maintenance work on bus bars can also be carried out only by disconnecting the whole supply.

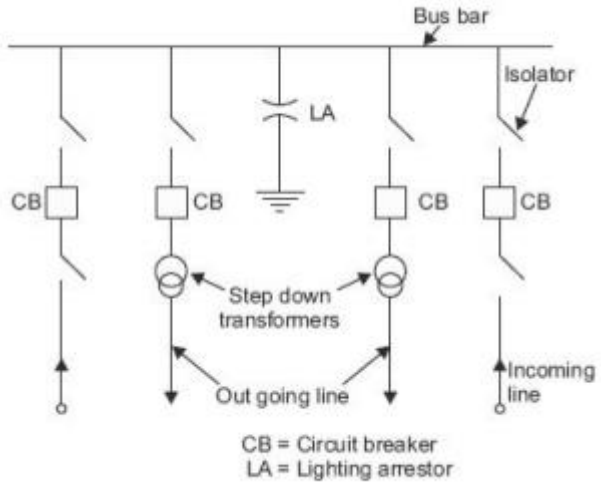

Fig.1 Layout diagram of single bus bar

The equipment connections are very simple, and hence, the system is very convenient to operate. This arrangement is not popular for voltages above 33 kV. The indoor 11 kV substations often use single bus bar arrangements.

Merits:

- Each of the outgoing circuits requires a single-circuit breaker. So, this type of arrangement is the cheapest one.
- The relaying system is simple.
- The maintenance cost is low.
- The bus bar potential can be used for the line relays.

Demerits:

- Maintenance without interruption of supply is not possible.
- Expansion of the substation without shutdown is not possible.

2.SINGLE-BUS BAR SYSTEM WITH SECTIONALIZATION

The sectionalization of the bus bar ensures continuity of supply on the other feeders, during the time of maintenance or repair of one side of the bus bar. The whole of the supply need not be shut down. The number of sections of a bus bar is usually 2 or 3 is a substation as shown in Fig.2, but actually it is limited by the short- circuit current to be handled. Another advantage of sectionalization is that the circuit breaks of low breaking capacity can be used on the sections as compared to the previous case. In case of duplicate feeders, they are connected to different sections of the bus bars so that in the event of a fault on one of the bus bar sections, the feeders connected to it are immediately transferred to the healthy-bus bar section and the faulty section is isolated.

An important point to note is that the sections should be synchronized before the bus coupled is closed for sharing the load.

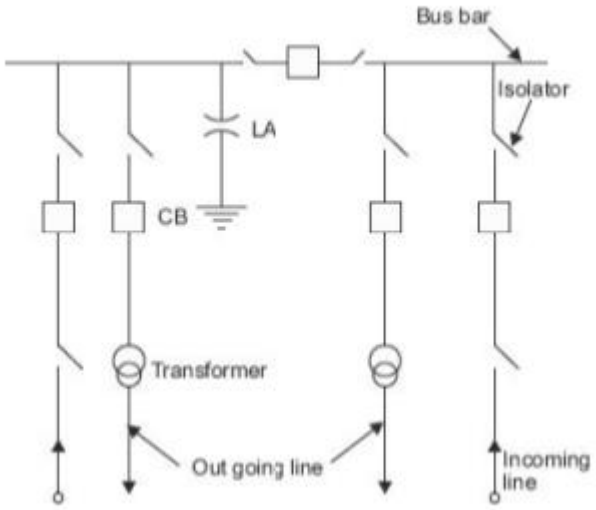

Fig.2 Layout diagram of single-bus bar system with sectionalization

Advantages:

- The operation of this system is simple as in case of the single bus bar.
- The maintenance cost of this system is comparable with the single bus bar.
- For maintenance or repair of the bus bar, only one half of the bus bar is required to be de-energized. So complete shut down of the bus bar is avoided.
- It is possible to utilize the bus bar potential for line relays.

Disadvantages:

- In case of a fault on the bus bar, one half of the section will be switched off.
- For regular maintenance also, one of the bus bars is required to be de-energized.
- For maintaining or repairing a circuit breaker, it is required to be isolated from the bus bar.

3. DOUBLE BUS BAR WITH SINGLE BREAKER

This system is shown in Fig.3. It consists of two identical bus bars, one is the main bus bar and another one is spare bus bar. Each bus bar has the capacity to take up the entire substation load. Each load may be fed from either bus bar. The infeed and load circuits can be further divided into two separate groups based on operational considerations (maintenance or repair). Any bus bar may be taken out for maintenance and cleaning of insulators.

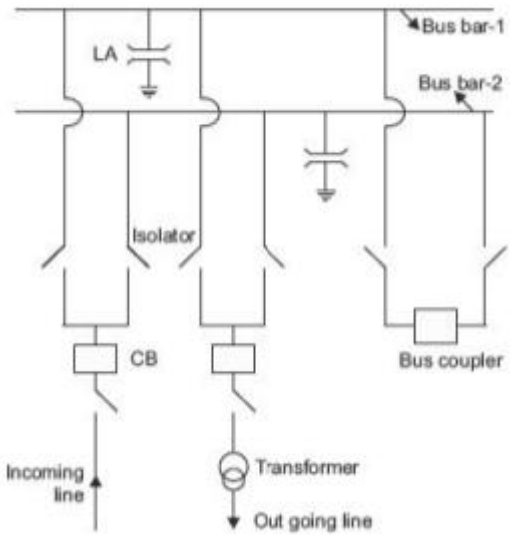

Fig.3 Layout diagram of double bus bar with single breaker

With the help of bus coupler, the incoming and/or outgoing lines are connected to any bus bar through isolator and circuit breaker. This system is adopted when the voltage is greater than 33 kV. This arrangement does not permit breaker maintenance without causing interruption in supply.

Advantages:

- Permits some flexibility with two operating buses.
- Any main bus may be isolated for maintenance.
- The circuit can be transferred readily from one bus to another by using bus-coupler and bus-selector disconnect switches.

Disadvantages:

- One extra breaker is required for the bus coupler.
- Three switches are required per circuit.
- High exposure to bus faults.
- If bus coupler fails, the entire substation runs out of service.

4. DOUBLE BUS BAR WITH TWO CIRCUIT BREAKERS

Figure.4 shows the schematic diagram of double bus bar arrangement with two breakers per circuit. This is a simple and flexible arrangement. It is expensive, and hence, is rarely used. When it is used, it is used in large generating stations which require a high-security connection. It provides the best maintenance facilities for maintenance to be carried out on the circuit breakers. Thus, when one circuit breaker is opened for maintenance or repair works, the load can be transferred on to the other circuit breaker very easily.

Advantages:

- Two circuit breakers in each circuit.
- Has flexibility to connect the feeder circuits to any bus.
- For service maintenance any breaker can be taken out.
- High reliability.

Disadvantages:

- More expensive.
- If circuits are not connected to both buses, the bus bar loses half the circuit for breaker failure and interprets supplies.

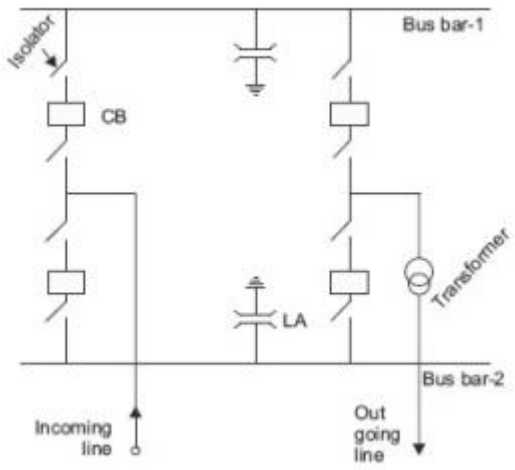

Fig.4 Layout diagram of double bus bar with two circuit breakers

5. BREAKERS AND A HALF WITH TWO MAIN BUSES

The schematic diagram of this arrangement is shown in Fig.5. This method is an improved version of double bus bar with two circuit breakers and uses lesser number of circuit breakers. In this method, one spare breaker is provided for every two circuits. When the breaker (own) is taken out for maintenance, the protection is complicated since it must associate the central breaker with the feeder.

Advantages:

- This system is more economical as compared to a double-bus double- breaker arrangement.
- A fault in a breaker or in a bus will not interrupt the supply. Addition of circuits to the system is possible.
- High reliability.
- Any main bus can be taken out of service at any time for maintenance.

Disadvantages:

- 1/2 breaker per circuit.
- The relaying becomes more complicated as compared to that in a single-bus arrangement.
- The maintenance cost is higher.

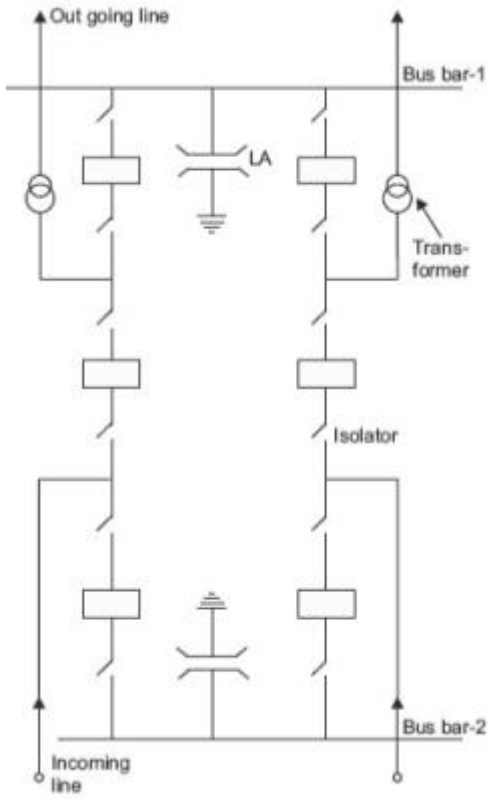

Fig.5 Layout diagram of breakers and a half with two main buses

6. MAIN AND TRANSFER BUS BAR

The schematic diagram of this commonly used arrangement is shown in Fig.6. This arrangement is an alternative to the double bus bar scheme. In this arrangement any line circuit breaker can be taken out for maintenance and repair without affecting the supply. This is done by closed transfer circuit breaker and changing the load to transfer bus bar and then removing the line breaker from service. Only one breaker at a time can be removed from service and the transfer breaker takes its place when it is out of service.

In a substation, to work on a bus bar, it is often necessary to remove it from service. This is possible only by transferring the load to the other bus bar. This is not possible in this scheme. Hence, the absence of this facility to remove any bus bar from service is the only drawback.

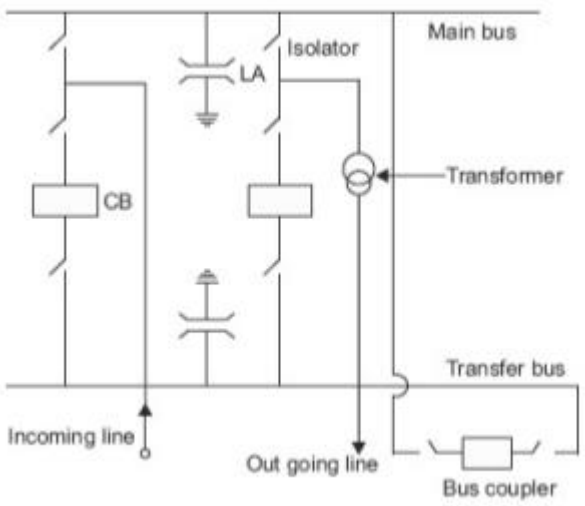

Fig.6 Layout diagram of main and transfer bus bar

Advantages:

- It ensures supply in case of bus fault. In case of any fault in a bus, thecircuit can be transferred to the transformer bus.
- It is easy to connect the circuit from any bus.
- The maintenance cost of substation decreases.
- The bus potential can be used for relays.

Disadvantages:

- Requires one extra breaker for the bus tie.
- Switching is somewhat complicated while maintaining a breaker.
- Failure of bus or any circuit breaker results in shutdown of entire substation.

7. DOUBLE BUS BAR WITH BYPASS ISOLATOR

This is a commonly used arrangement also known as sectionalized double bus bar arrangement and is shown in Fig.7. This is a combination of a double-bus and main transfer-bus scheme. Any of the bus bars can act as a main bus and another bus is used as the transfer bus. The advantage of this method is that any circuit breaker or any bus bar can be taken out for service without affecting the supply. In substations, it is frequently necessary to take bus bar or the circuit breaker out of service for maintenance or repair. So this scheme is the recommended one both because it is simple and economical.

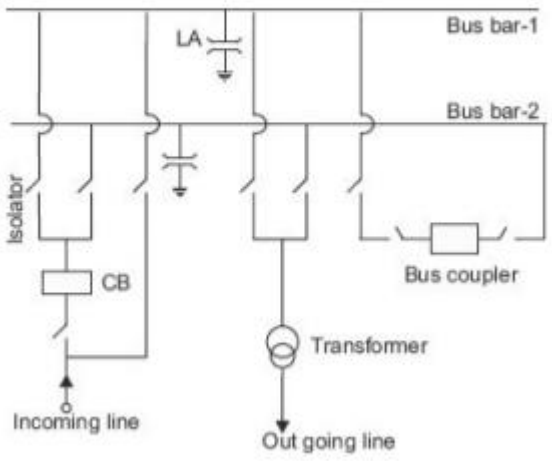

Fig.7 Layout diagram of double bus bar with bypass isolator

8. RING BUS

This is an extension of the sectionalized bus bar arrangement. By using two bus couplers, as shown in Fig.8, the ends of the bus bars are returned upon themselves to form a ring. The sectionalizing and bus coupler are in series. There is a greater flexibility of operation. This is not a commonly used arrangement at present.

Different types of ring or mesh buses utilized are:

1. Simple ring.
2. Rectangular ring.
3. Circulating ring
4. Zigzag ring.

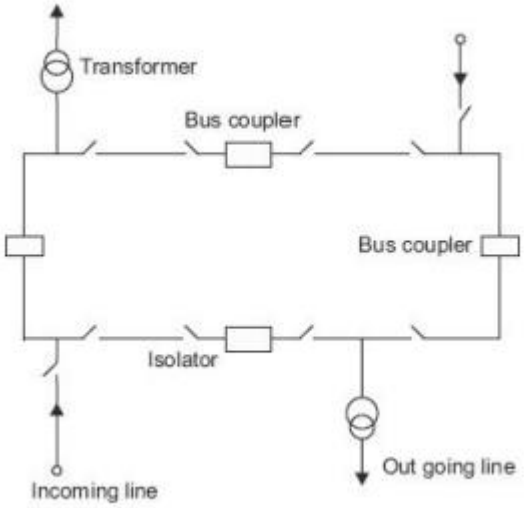

Fig.8 Layout diagram of ring bus

Advantages:

- Low initial and ultimate cost.
- Flexible operation for breaker maintenance.
- Any breaker can be removed for maintenance without interrupting load.
- Required only one breaker per circuit.
- Does not use main bus.

Disadvantages:

- It is necessary to trip two circular breakers to isolate a faulted line, which makes the relaying quite complex.
- It is necessary to supply potential to relays separately to each of the circuits.
- It is difficult to add any new circuit to the ring.

FACTORS EFFECTING THE SUBSTATION LOCATION (OR) SITE

Figure 1.6 shows the factors that affect substation site selection. The distance from the load centers and from the existing subtransmission lines as well as other limitations, such as availability of land. its cost, and land use regulations, are important.

The substation siting process can be described as a screening procedure through which all pos- sible locations for a site are passed, as indicated in Figure 1.7. The service region is the area under evaluation. It may be defined as the service territory of the utility. An initial screening is applied by using a set of considerations, for example, safety, engineering, system planning, institutional, economics, and aesthetics. This stage of the site selection mainly indicates the areas that are unsuit- able for site development. Thus, the service region is screened down to a set of candidate sites for substation construction. Further, the candidate sites are categorized into three basic groups:

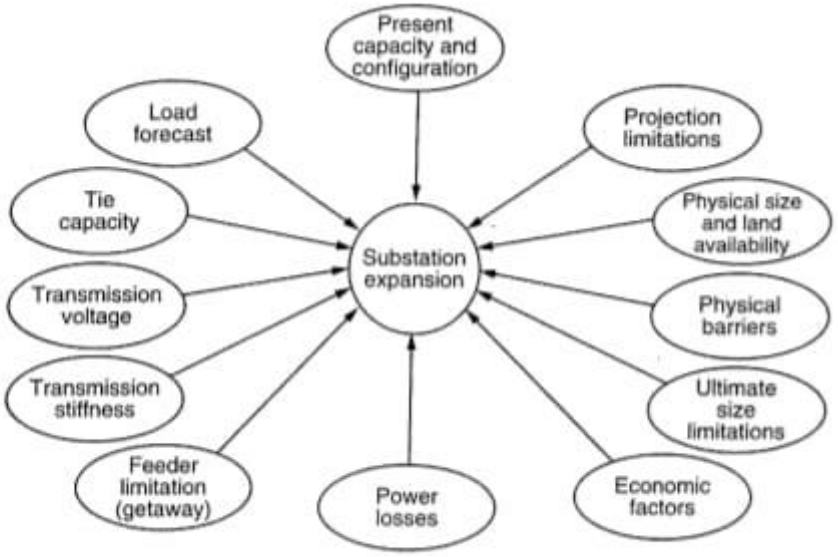

FIGURE 1.5 Factors affecting substation expansion.

(i) sites that are unsuitable for development in the foreseeable future;

(ii) (ii) sites that have some promise but are not selected for detailed evaluation during the planning cycle; and

(iii) (iii) candidate sites that are to be studied in more detail.

The emphasis put on each consideration changes from level to level and from utility to utility.

Three basic alternative uses of the considerations are:

(i) quantitative versus qualitative evaluation.

(ii) adverse versus beneficial effects evaluation, and

(iii) absolute versus relative scaling of effects.

A complete site assessment should use a mix of all alternatives and attempt to treat the evaluation from a variety of perspectives.

OTHER FACTORS

Once the load assignments to the substations are determined, then the remaining factors affecting primary voltage selection, feeder route selection, number of feeders, conductor size selection, and total cost, as shown in Figure 1.8, need to be considered.

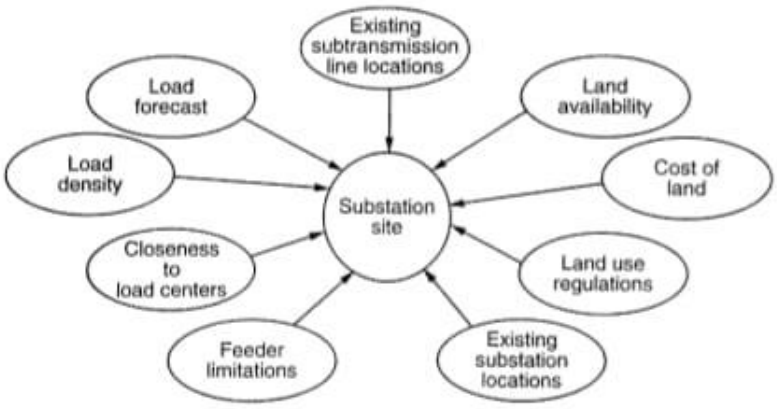

FIGURE 1.6 Factors affecting substation siting.

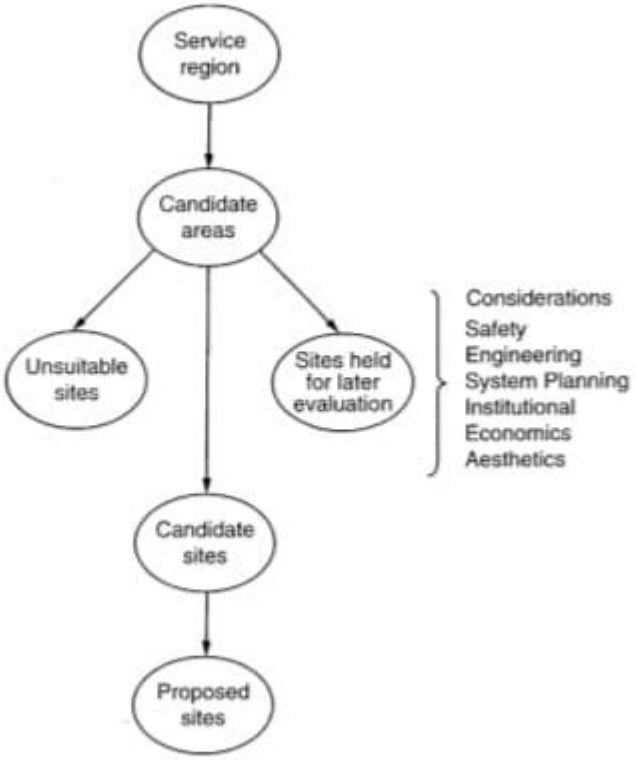

FIGURE 1.7 Substation site selection procedure.

In general, the subtransmission and distribution system voltage levels are determined by company policies, and they are unlikely to be subject to change at the whim of the planning engineer unless the planner's argument can be supported by running test cases to show substantial benefits that can be achieved by selecting different voltage levels.

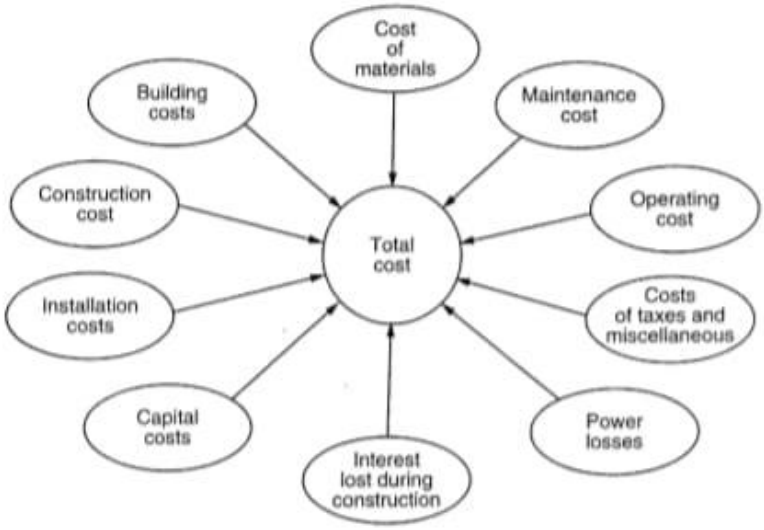

FIGURE 1.8 Factors affecting total cost of the distribution system expansion.

Further, because of the standardization and economy that are involved, the designer may not have much freedom in choosing the necessary sizes and types of capacity equipment. For example, the designer may have to choose a distribution transformer from a fixed list of transformers that are presently stocked by the company for the voltage levels that are already established by the company. Any decision regarding addition of a feeder or adding on to an existing feeder will, within limits, depend on the adequacy of the existing system and the size, location, and timing of the additional loads that need to be served.

FACTORS EFFECTING THE PRIMARY FEEDER RATING

There are various and yet interrelated factors affecting the selection of a primary-feeder rating. Examples are:

1) The nature of the load connected.

2) The load density of the area served.

3) The growth rate of the load.

4) The need for providing spare capacity for emergency operations.

5) The type and cost of circuit construction employed.

6)The design and capacity of the substation involved.

7) The type of regulating equipment used.

8) The quality of service required.

9) The continuity of service required.

FACTORS EFFECTING THE PRIMARY FEEDER VOLTAGE LEVEL

The following factors affecting the design and operation of primary-feeder should be considered while selecting the voltage level:

1) Length and loading of primary feeder.

2) Number location and ratings of distribution substations.

3) Number of subtransmission lines and distribution lines that feed the given area.

4) Route plan, number of poles, sections and way clearance (such as tree-trimming) etc.

5) Number of customers and their importance.

There are additional factors affecting the decisions for primary-feeder voltage level, as shown in Fig.1

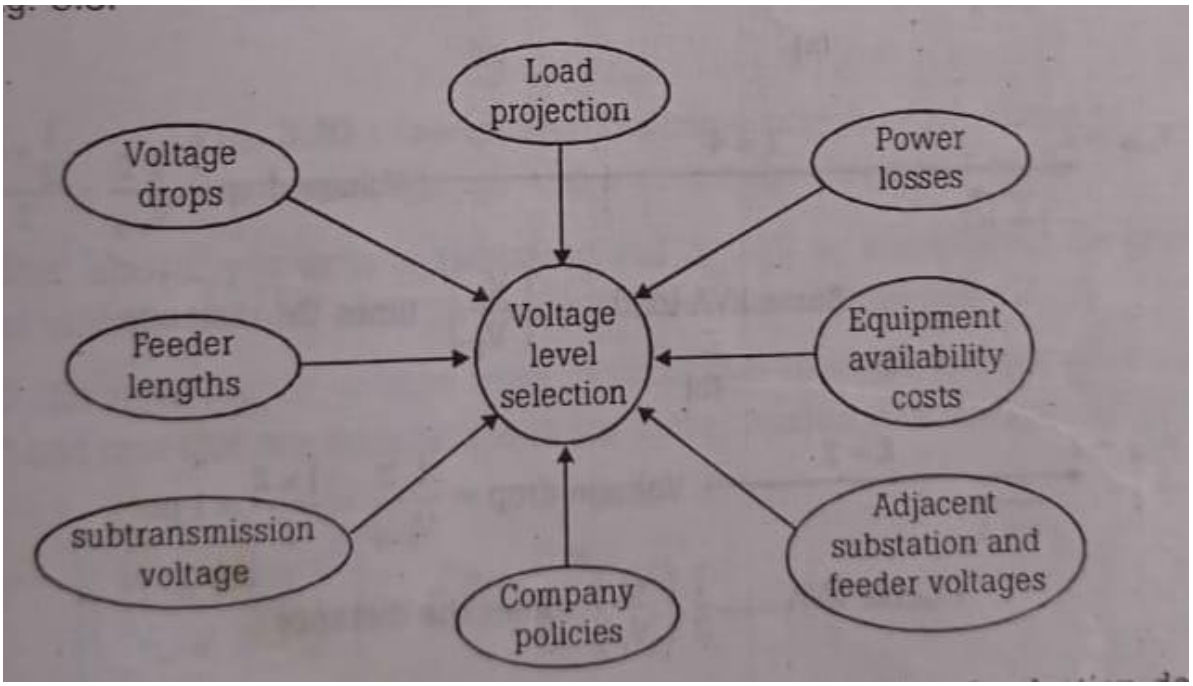

Fig.1 Additional factors affecting primary-feeder voltage-level selection decision

The voltage levels for primary distribution feeders in India are 33, 22, 11 and 6.6 kV.All the primary feeders are three-phase, three-wire. Usually, the primary feeders located in low-load density areas are restricted in length and loading by permissible voltage drop rather than by thermal restrictions, whereas primary feeders located in high-load density areas (for example industrial and commercial areas, may be restricted by the thermal limitations.

FACTORS EFFECTING THE PRIMARY FEEDER LOADING

The primary feeder loading is defined 'as the loading of a feeder during peak load conditions as measured at the substation".

The factors affecting the design of primary feeder loading are as follows:

1) Nature and density of the feeder loads connected.

2) Growth rate and reserve capacity requirements for emergency.

3) Continuity, reliability and quality of service.

4) Primary feeder voltage levels and regulation requirements.

5) Location and capacity of the distribution substation.

6) Type and cost of construction and operating cost factors.

7)Altemate supply provisions made.

Additional factors affecting the design of a feeder are illustrated in the following figure.

a) Feeder routing (Fig.1)

b) Number of feeders (Fig.2)

c)Selection of conductor size (Fig.3)

1 Factors Affecting Feeder Routing Decisions

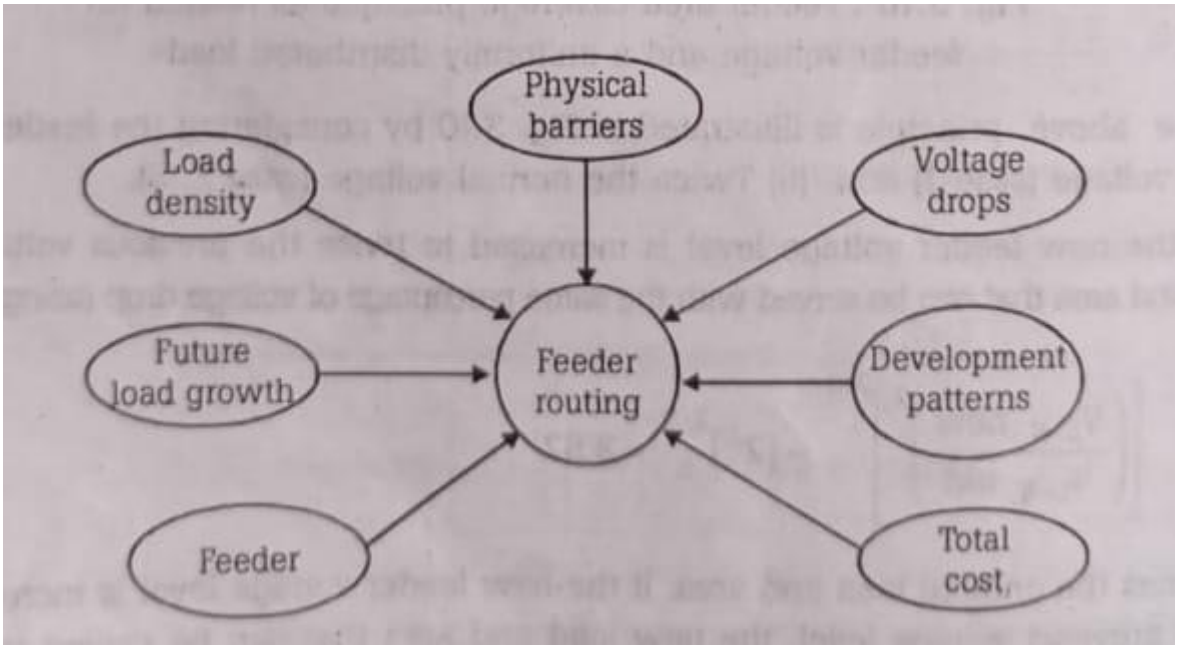

Fig.1 Factors Affecting Feeder Routing Decisions

2 Factors Affecting Number Of Feeders

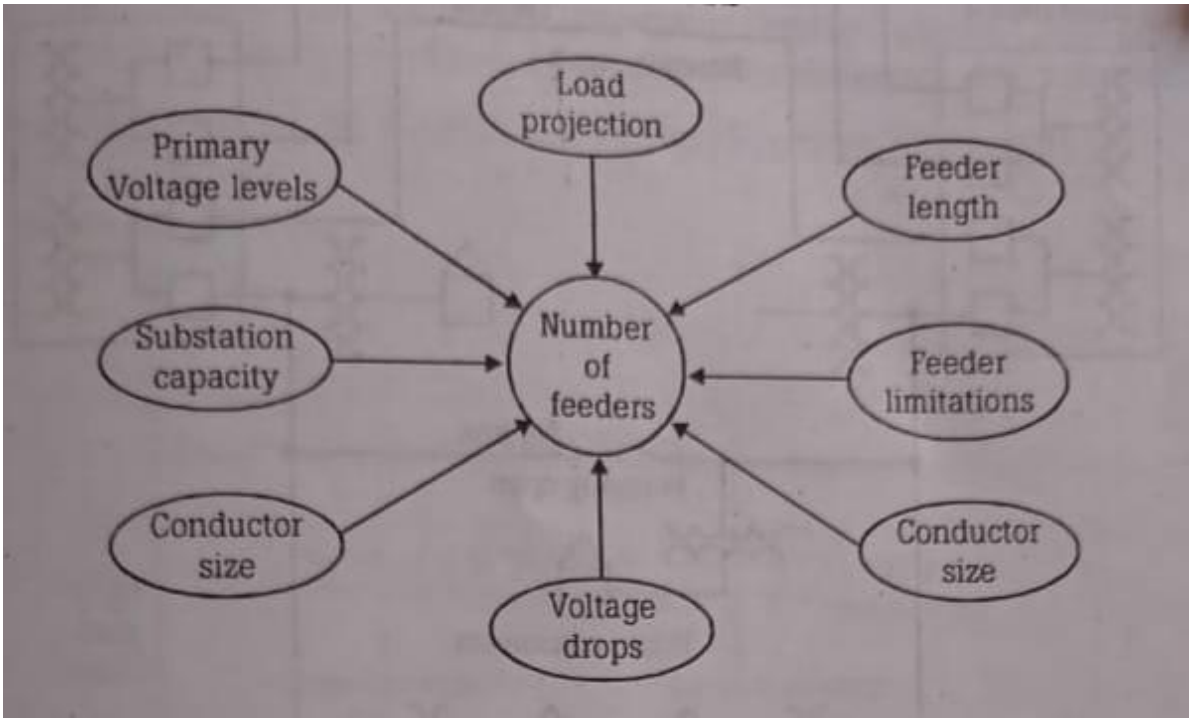

Fig.2 factors affecting number of feeders

3 Factors Affecting Conductor Size Selection

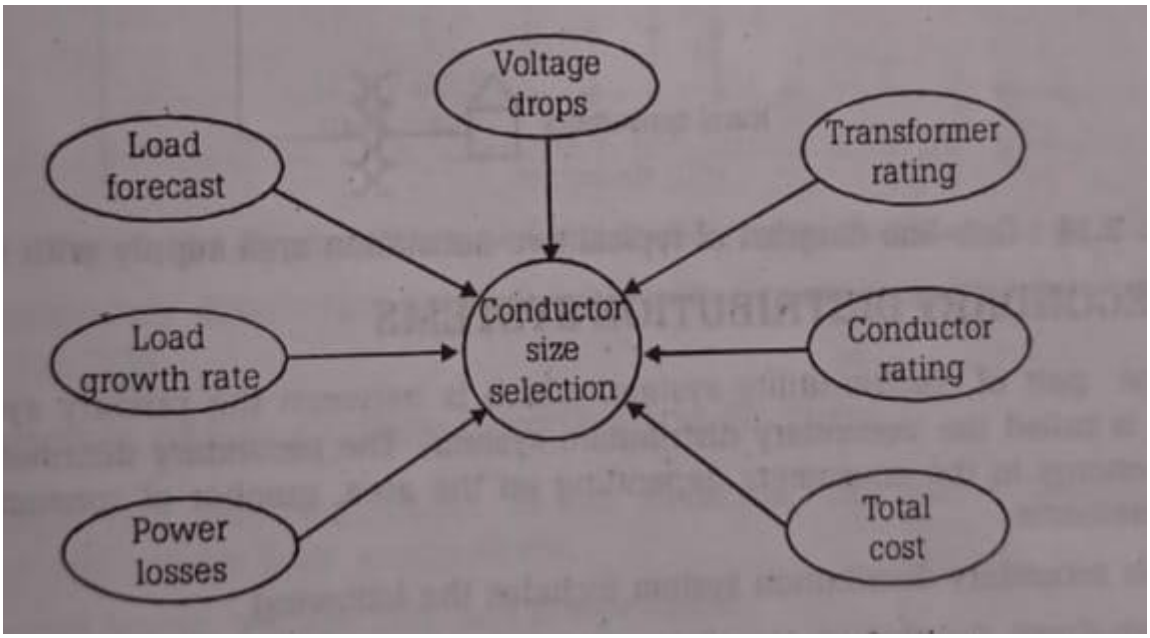

Fig.3 Factors Affecting Conductor Size Selection

TYPES OF PRIMARY FEEDERS

The part of the electric utility system which is between the distribution substation and the distribution transformers is called the primary system. It is made of circuits known as primary feeders or primary distribution feeders.

There are various and yet interrelated factors affecting the selection of a primary-feeder rating. Examples are:

1. The nature of the load connected
2. The load density of the area served
3. The growth rate of the load
4. The need for providing spare capacity for emergency operations
5. The type and cost of circuit construction employed
6. The design and capacity of the substation involved
7. The type of regulating equipment used
8. The quality of service required
9. The continuity of service required.

The voltage conditions on distribution systems can be improved by using shunt capacitors which are connected as near the loads as possible to derive the greatest benefit. The use of shunt capacitors also improves the power factor involved which in turn lessens the voltage drops and currents, and therefore losses, in the portions of a distribution system between the capacitors and the bulk power buses. The capacitor ratings should be selected carefully to prevent the occurrence of excessive overvoltages at times of light loads because of the voltage rise produced by the capacitor currents.

The voltage conditions on distribution systems can also be improved by using series capacitors. But the application of series capacitors does not reduce the currents and therefore losses, in the system.

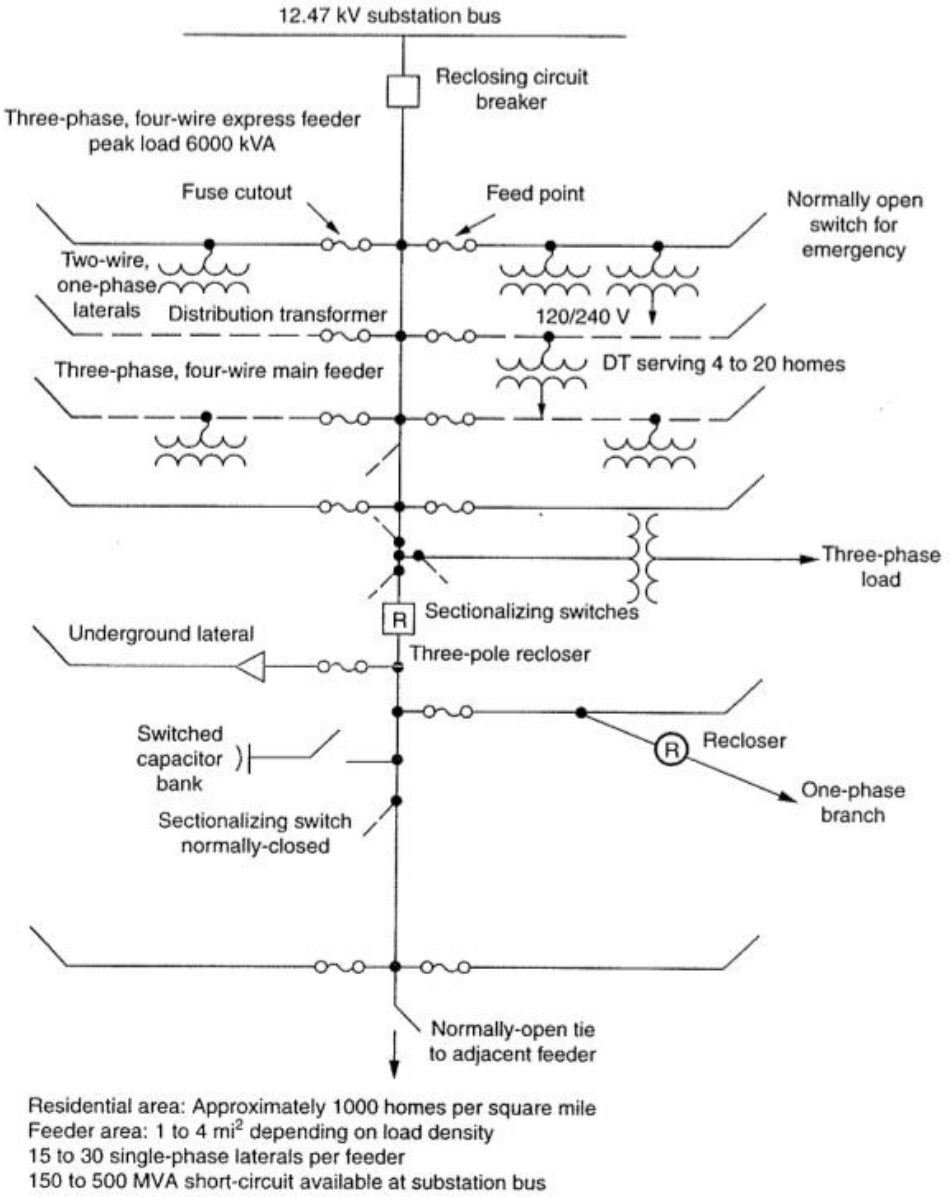

Figure.1 One-line diagram of typical primary distribution feeders.

1. RADIAL-TYPE PRIMARY FEEDER

The simplest and the lowest cost and therefore the most common form of primary feeder is the radial-type primary feeder as shown in Figure1.1. The main primary feeder branches into various primary laterals which in turn separates into several sublaterals to serve all the distribution trans- formers. In general, the main feeder and subfeeders are three-phase three- or four-wire circuits and the laterals are three- or single-phase. The current magnitude is the greatest in the circuit conduc tors that leave the substation.

The current magnitude continually lessens out toward the end of the feeder as laterals and sublaterals are tapped off the feeder. Usually, as the current lessens, the size of the feeder conductors is also reduced. However the permissible voltage regulation may restrict any feeder size reduction which is based only on the thermal capability, that is, current-carrying capacity, of the feeder.

The reliability of service continuity of the radial primary feeders is low. A fault occurrence at any location on the radial primary feeder causes a power outage for every consumer on the feeder unless the fault can be isolated from the source by a disconnecting device such as a fuse, sectional- izer, disconnect switch, or recloser.

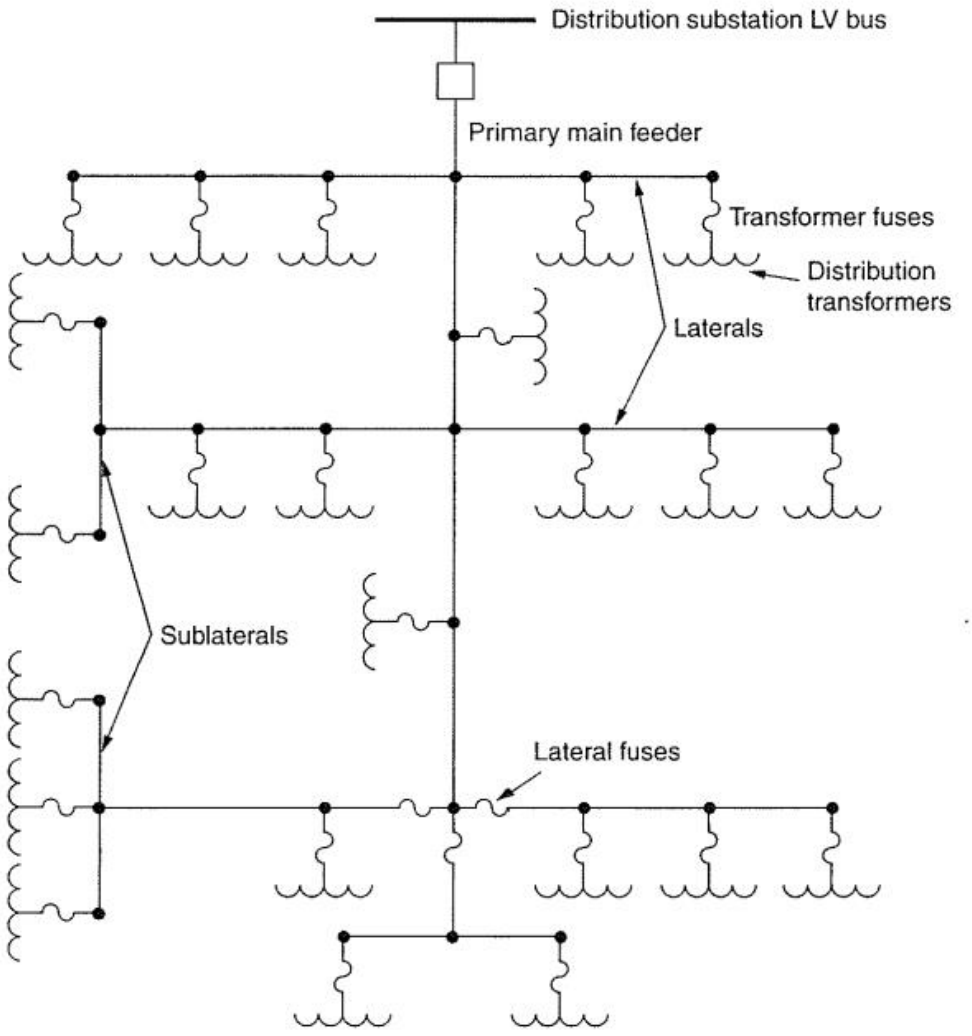

Figure 1.1. Radial type primary feeder

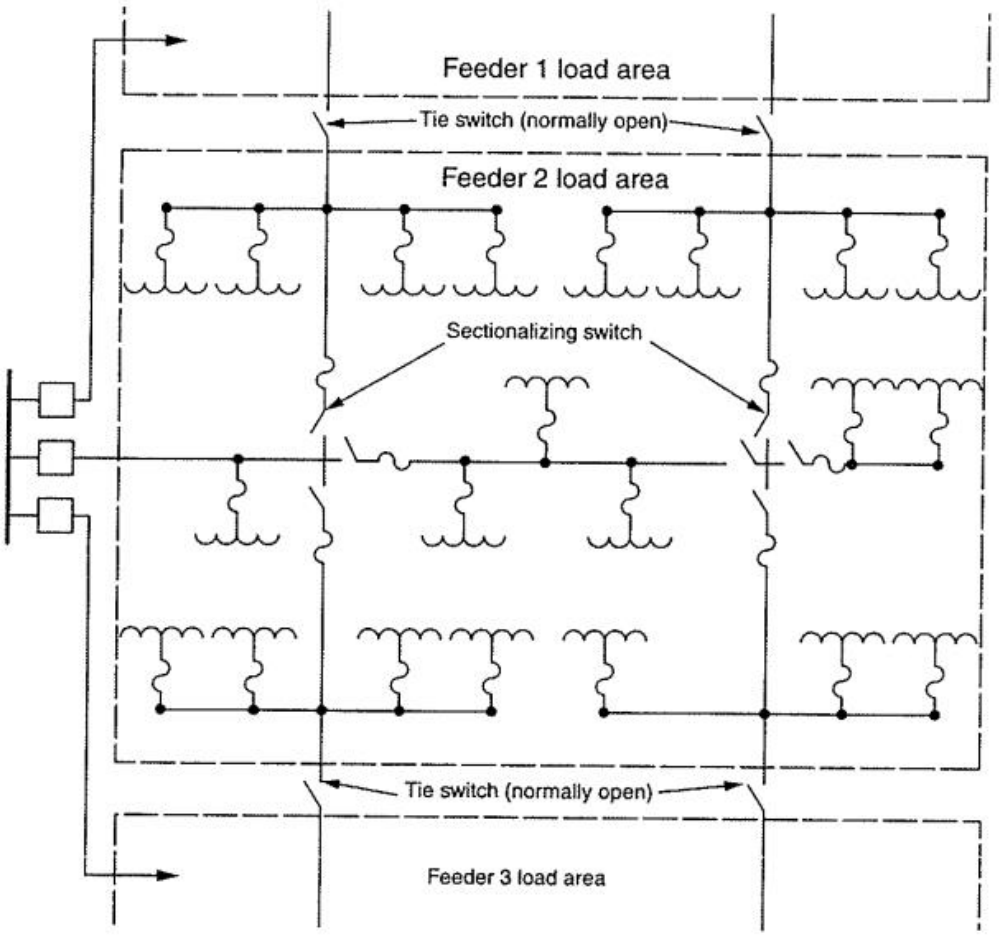

Figure 1.2. Radial type primary feeder with tie and sectionalizine switches. (Data abstracted from Rome Cable Company, URD Technical Manual, 4th ed.)

Figure 1.2. shows a modified radial-type primary feeder with tie and sectionalizing switches to provide fast restoration of service to customers by switching unfaulted sections of the feeder to an adjacent primary feeder or feeders. The fault can be isolated by opening the associated disconnect- ing devices on each side of the faulted section.

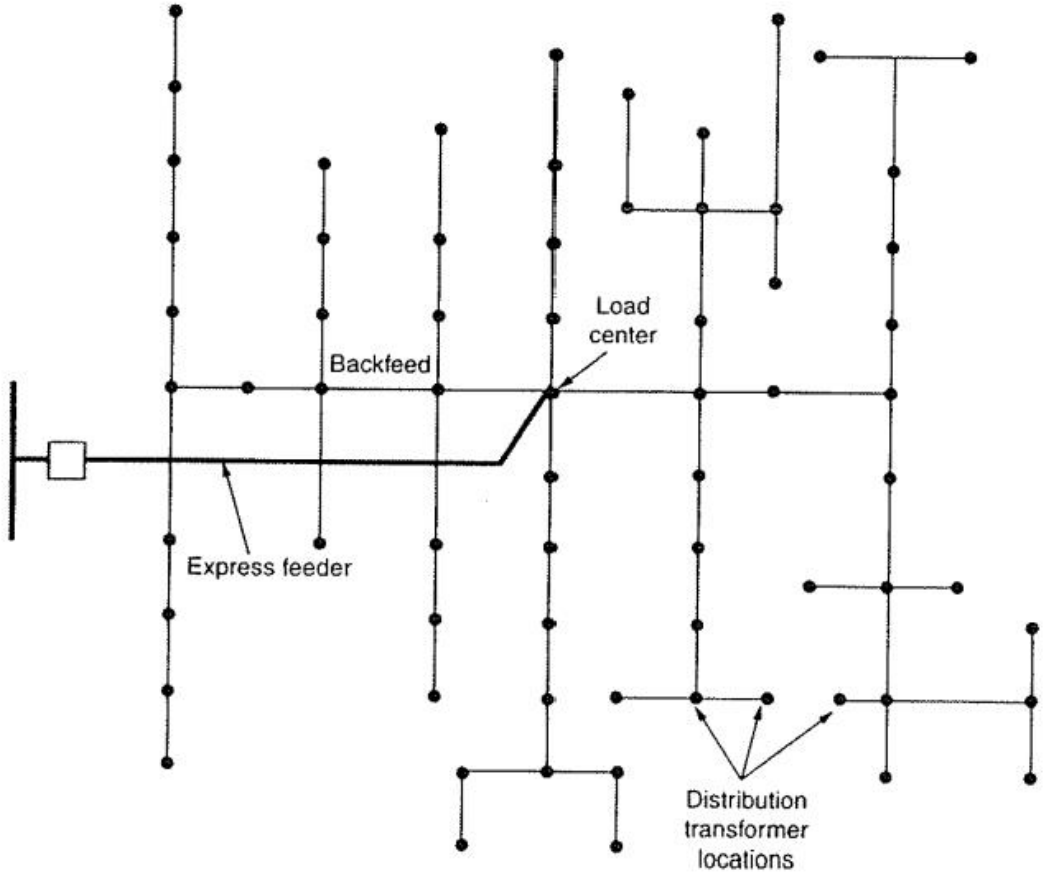

Figure 1.3. Radial type primary feeder with express feeder and backfeed.

Figure 1.3.shows another type of radial primary feeder with express feeder and backfeed. The section of the feeder between the substation low-voltage bus and the load center of the service area is called an express feeder. No subfeeders or laterals are allowed to be tapped off the express feeder. However, a subfeeder is allowed to provide a backfeed toward the substation from the load center.

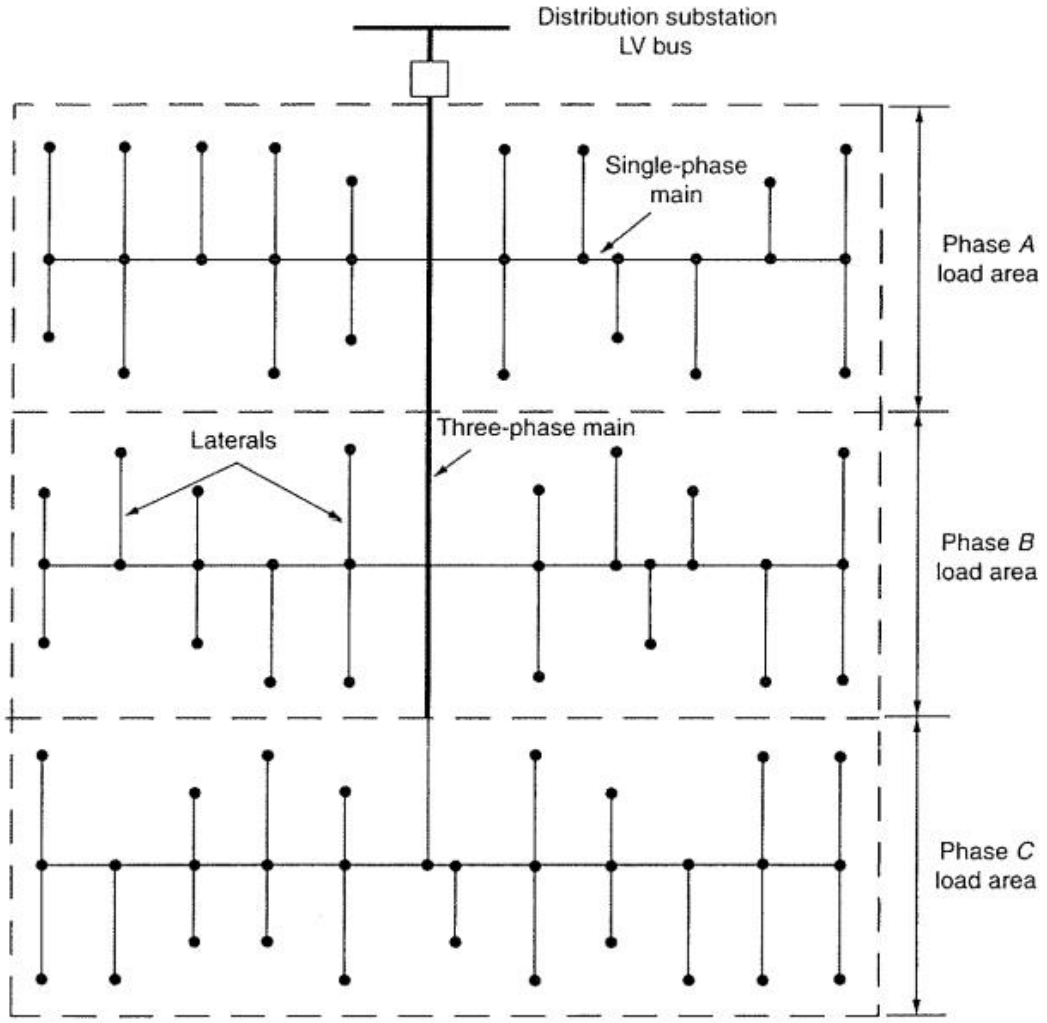

Figure 1.4. Radial-type phase-area feeder

Figure 1.4. shows a radial-type phase-area feeder arrangement in which each phase of the three- phase feeder serves its own service area. In Figures 1.3 and 1.4, each dot represents a balanced three-phase load lumped at that location.

2. LOOP-TYPE PRIMARY FEEDER

Figure 2.1 shows a loop-type primary feeder which loops through the feeder load area and returns back to the bus. Sometimes the loop tie disconnect switch is replaced by a loop tie breaker because of the load conditions. In either case, the loop can function with the tie disconnect switches or breakers normally open or normally closed.

Usually, the size of the feeder conductor is kept the same throughout the loop. It is selected to carry its normal load plus the load of the other half of the loop. This arrangement provides two par- allel paths from the substation to the load when the loop is operated with normally open tie breakers or disconnect switches.

A primary fault causes the feeder breaker to be open. The breaker will remain open until the fault is isolated from both directions. The loop-type primary feeder arrangement is especially bene- ficial to provide service for loads where high service reliability is important. In general, a separate feeder breaker on each end of the loop is preferred, despite the cost involved. The parallel feeder paths can also be connected to separate bus sections in the substation and supplied from separate transformers. In addition to main feeder loops, normally open lateral loops are also used, particu- larly in underground systems.

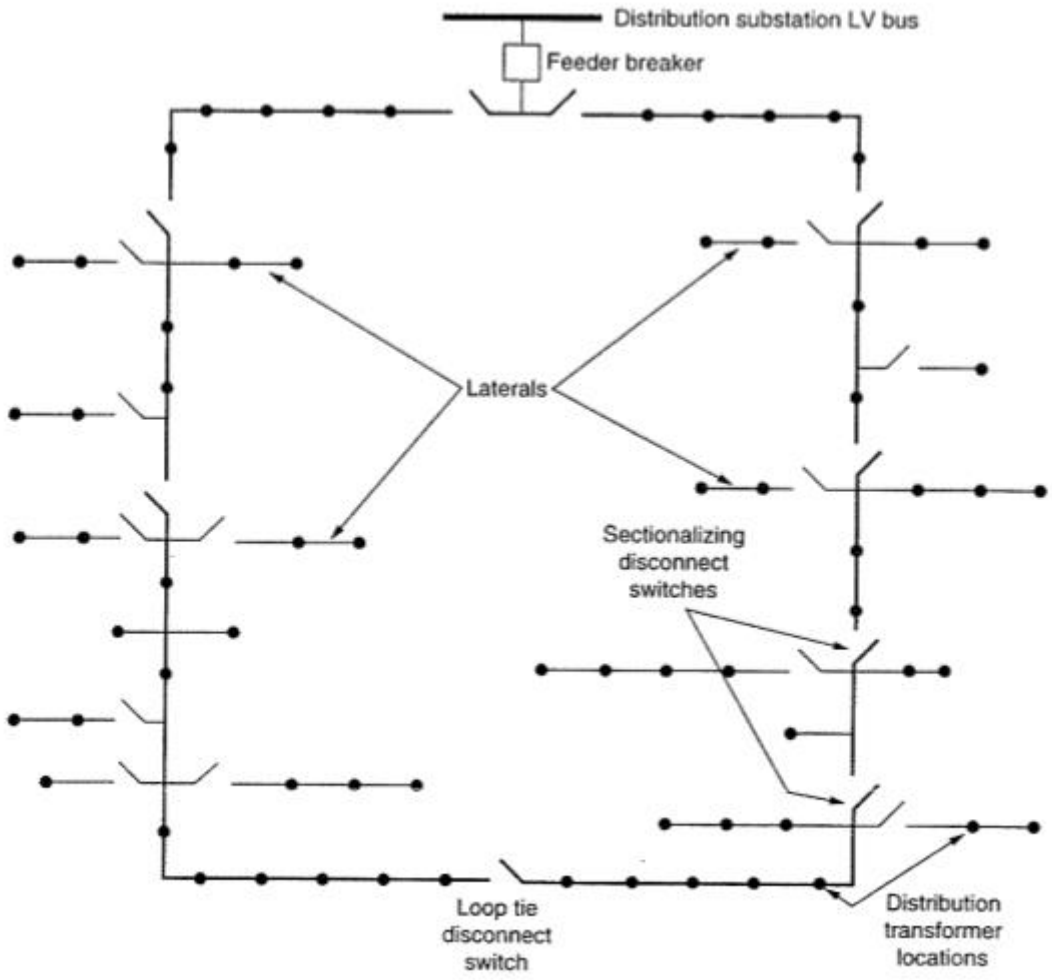

Figure 2.1 Loop-type primary fedder

3. PRIMARY NETWORK

As shown in Figure 3. a primary network is a system of interconnected feeders supplied by a number of substations. The radial primary feeders can be tapped off the interconnecting tie feed- ers. They can also be served directly from the substations. Each tie feeder has two associated circuit breakers at each end in order to have less load interrupted because of a tie-feeder fault.

The primary network system supplies a load from several directions. Proper location of trans-formers to heavy-load centers and regulation of the feeders at the substation buses provide for ade- quate voltage at utilization points. In general, the losses in a primary network are lower than those in a comparable radial system because of load division.

The reliability and the quality of service of the primary network arrangement is much higher than the radial and loop arrangements. However, it is more difficult to design and operate than the radial or loop systems.

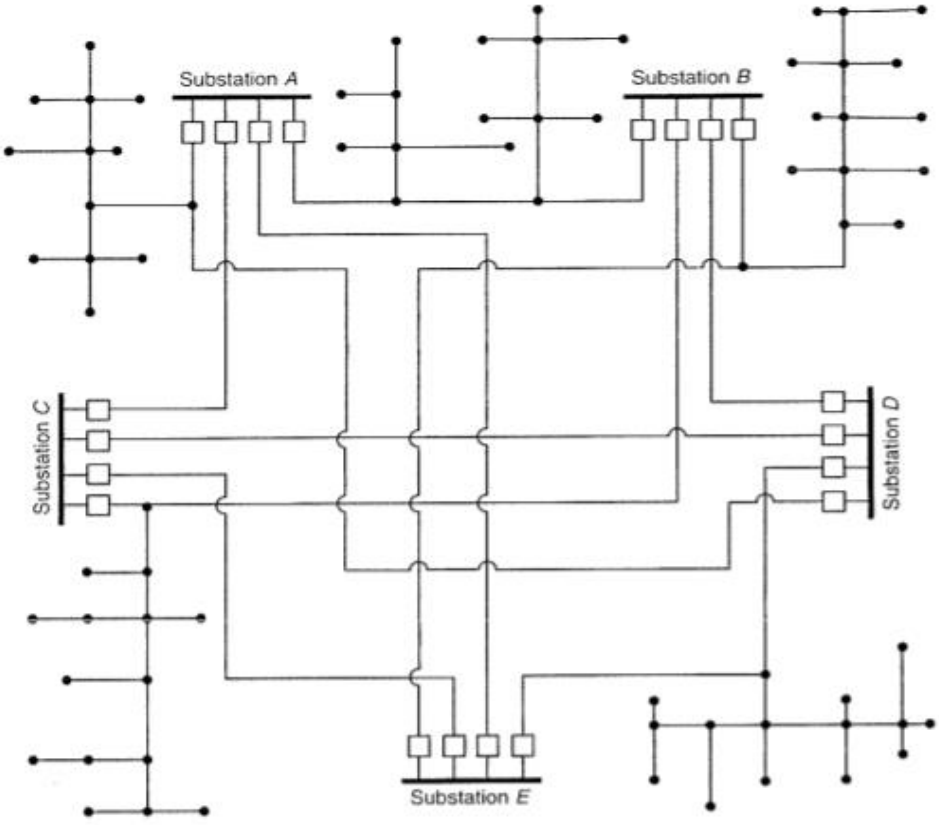

Figure 3. Primary network

Unit – 2

DISTRIBUTION SYSTEM SUBSTATIONS AND LOADS

1.1 Rating of a distribution substation for square

The additional capacity requirements of a system with increasing load density can be met by:

1. Either holding the service area of a given substation constant and increasing its capacity.

2. Or developing new substations and thereby holding the rating of the given substation constant.

Square-shaped service area representing a part of, or the entire service area of, a distribution substation. It is assumed that the square area is served by four primary feeders from a central feed point, as shown in Figure 4.16. Each feeder and its laterals are of three-phase. Dots represent balanced three-phase loads lumped at that location and fed by distribution transformers.

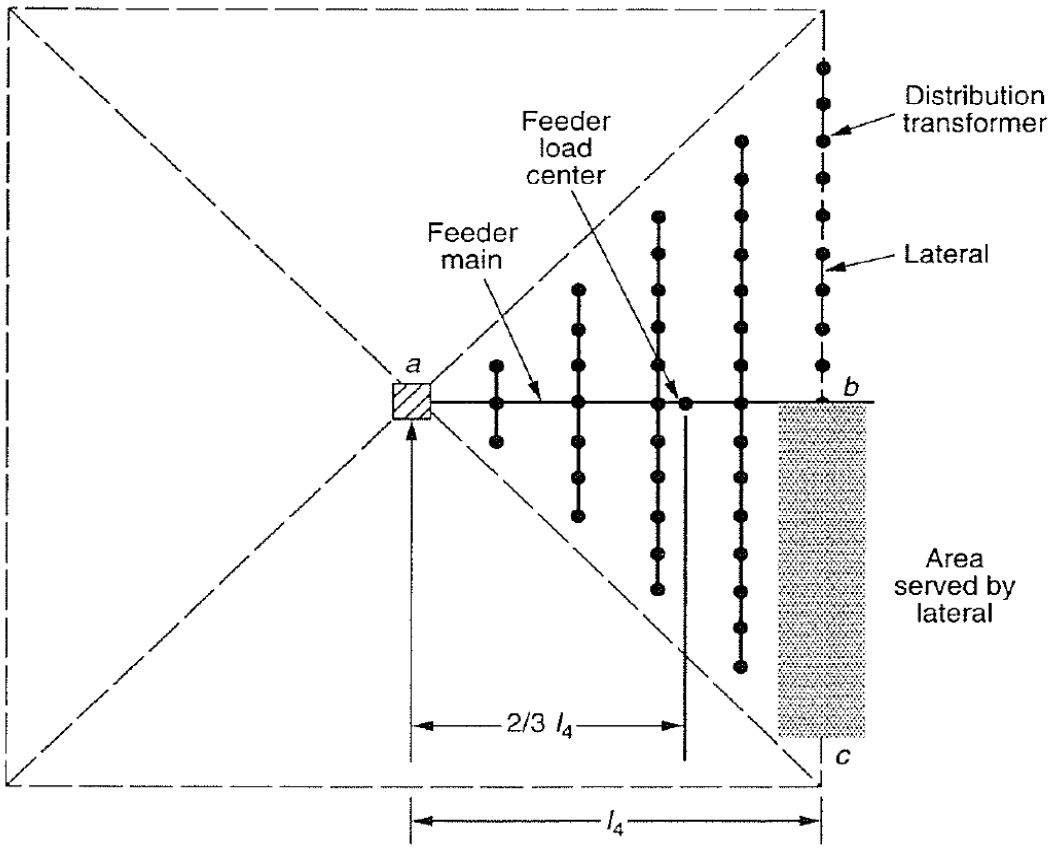

Figure 2.1. Square-Shaped Distribution Substation Service Area

Here, the percent voltage drop from the feed point a to the end of the last lateral at c is

$$\% VD_{ac} = \% VD_{ab} + \% VDbc$$

Reps [5] simplified this voltage drop calculation by introducing a constant K which can be defined as percent voltage drop per kilo voltampere-mile. Figure 2.1 gives the K constant for

various voltages and copper conductor sizes. Figure 2.1. is developed for three-phase overhead lines with an equivalent spacing of 37 inches between phase conductors. The following analysis is based on the work done by Denton and Reps [4] and Reps [5].

In Figure 2.1. each feeder serves a total load of

$$S_4 = A_4 \times D \text{ KVA} \qquad (1)$$

where S, is the kilo voltampere load served by one of four feeders emanating from a feed point, A is the area served by one of the four feeders emanating from a feed point (mi^2), and D is the load density (kVA/mi^2).

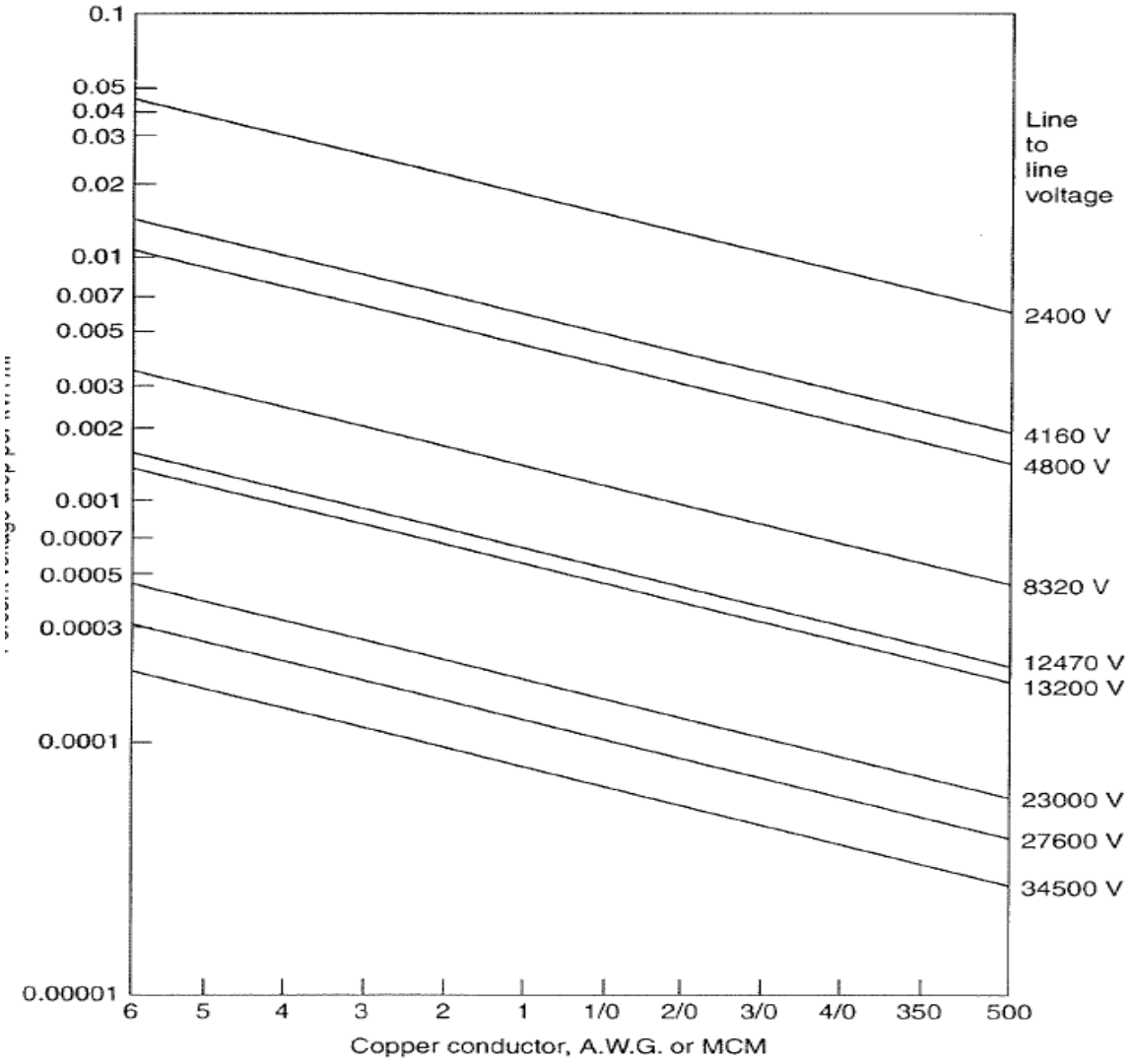

FIGURE 2.2. The K constant for copper conductors, assuming a lagging load power factor of 0.9.

Equation 1 can be written as 3

$$S_4 = I_4^2 \times D \text{ KVA} \qquad (2)$$

Since

$$A_4 = l_4^2 \quad (3)$$

where l_4 is the linear dimension of the primary feeder service area in miles. Assuming uniformly distributed load, that is, equally loaded and spaced distribution transformers, the voltage drop in the primary-feeder main is

$$\%VD_{4Min} = \frac{2}{3} \times l_4 \times K \times S \quad (4)$$

Sub equation 2 into 4,

$$\%VD_{4Min} = 0.0667 \times K \times D \times I_4^3 \quad (5)$$

In Equations 2.4 and 2.5, it is assumed that the total or lumped sum load is located at a point on the main feeder at a distance of 2/3 xf, from the feed point a

Reps [5] extends the discussion to a hexagonally shaped service area supplied by six feeders from the feed point which is located at the center, as shown in Figure 2.2. Assume that each feeder service area is equal to one-sixth of the hexagonally shaped total area, or

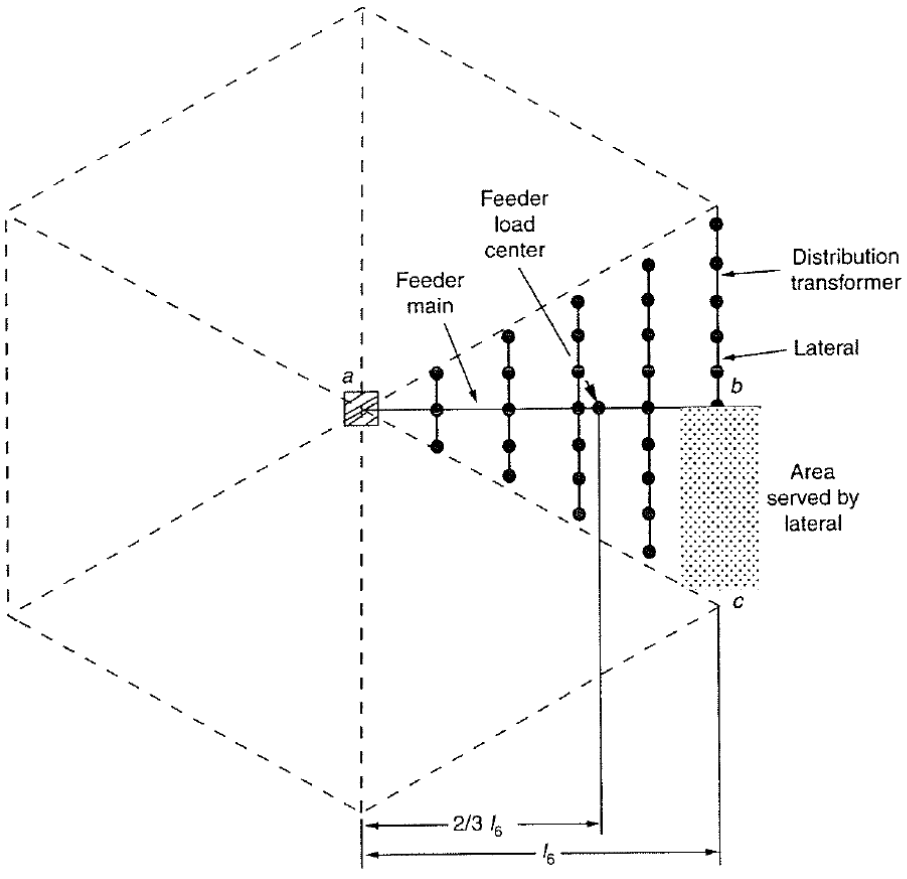

FIGURE 2.3 Hexagonally shaped distribution substation area

$$A_6 = \frac{l_6}{\sqrt{3}} \times l_6$$
$$= 0.578 \times l_6^2 \quad \textbf{(1)}$$

where A, is the area served by one of the six feeders emanating from a feed point (mi?) and 4, is the linear dimension of a primary-feeder service area (mi). Here, each feeder serves a total load of

$$S_6 = A_6 \text{ X D KVA} \tag{2}$$

substituting Equation 6 into Equation 2

$$S_6 = 0.578 \times D \times 1_6^2 \tag{3}$$

As before, it is assumed that the total or lump sum is located at a point on the main feeder at a distance of I, from the feed point. Hence, the percent voltage drop in the main feeder is

$$\%VD_{6MIN} = \frac{2}{3} X\ l_6\ X\ K\ X\ S_6 \tag{4}$$

substituting Equation 8 into Equation 4.

$$\%VD_{6MIN} = 0.385\ X\ K\ X\ l_6 \tag{5}$$

2.3.GENERAL CASE: SUBSTATION SERVICE AREA WITH *N* PRIMARY FEEDERS

The general case in Which the distribution substation service area is served by *n* primary feeders emanating from the point, as shown in Figure 2.3. Assume that the load in the service area is uniformly distributed and each feeder serves an area of triangular shape. The differential load served by the feeder in a differential area of *dA* is

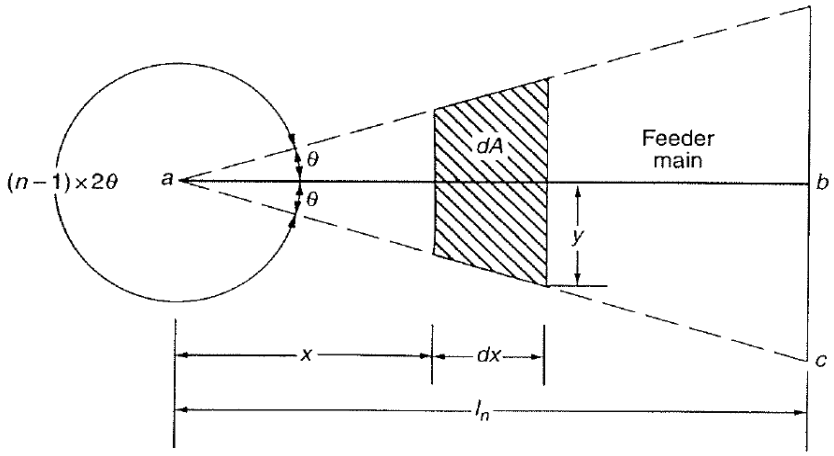

FIGURE **2.3.** Distribution substation service area served by *n* primary feeders.

$$dS = D\ dA \text{ kVA} \tag{1}$$

where *d*S is the differential load served by the feeder in the differential area of *d*A(KVA), D is the load density (KVA/mil), and, *d*A is the differential service arca of the feeder (mi^2).

In Figure 2.3. the following relationship exists:

$$\tan\theta = \frac{y}{x + dx} \tag{2}$$

or

$$\begin{aligned} y &= (x + dx)\tan\theta \\ &\cong x \times \tan\theta. \end{aligned} \tag{3}$$

The total service area of the feeder can be calculated as

$$\begin{aligned} A_n &= \int_{x=0}^{l_n} dA \\ &= l_n^2 \times \tan\theta. \end{aligned} \tag{4}$$

The total kilovoltampere load served by one of the n feeders can be calculated as

$$\begin{aligned} S_n &= \int_{x=0}^{l_n} dS \\ &= D \times l_n^2 \times \tan\theta. \end{aligned} \tag{5}$$

This total load is located, as a lump-sum load, at a point on the main feeder at a distance of $2/3 \times l_4$ from the feed point a. Hence, the summation of the percent voltage contributions of all such areas is

$$\%\mathrm{VD}_n = \frac{2}{3} \times l_n \times K \times S_n \tag{6}$$

Or, substituting Equation 5 into 6

$$\%\mathrm{VD}_n = \frac{2}{3} \times K \times D \times l_n^3 \times \tan\theta \tag{7}$$

Or since

$$n(2\theta) = 360 \tag{8}$$

Equation 7 can also be expressed as

$$\%\mathrm{VD}_n = \frac{2}{3} \times K \times D \times l_n^3 \times \tan\frac{360^\circ}{2n}. \tag{9}$$

Equation 8 and 9 are only applicable when n ≥ 3. Table 2.1 gives the result of the application of equation 7 to square and hexagonal are.

TABLE 4.2
Application Results of Equation 4.17

n	θ	$\tan\theta$	$\%VD_n$
4	45°	1.0	$\frac{2}{3}\times K\times D\times l_4^3$
6	30°	$\frac{1}{\sqrt{3}}$	$\frac{2}{3}\times K\times D\times l_6^3$

For n = 1, the percent voltage drop on the feeder main is

$$\%VD_1 = \frac{1}{2}\times K\times D\times l_1^3 \tag{10}$$

And for $n = 2$ it is

$$\%VD_2 = \frac{1}{2}\times K\times D\times l_2^3 \tag{11}$$

To compute the percent voltage drop in uniformly loaded lateral, lump and locate its total load at a point halfway along its length, and multiply the kilovolt ampere-mile product for that line length and loading by the appropriate K constant [5].

2.4 COMPARISON OF THE FOUR- AND SIX-FEEDER PATTERNS

For a square-shaped distribution substation area served by four primary feeders, that is, n=4, the area served by one of the four feeders is

$$A_4 = l_4^2 mi^2 \tag{1}$$

The total area served by all four feeders is

$$\begin{aligned} TA_4 &= 4A_4 \\ &= 4l_4^2 \text{ mi}^2. \end{aligned} \tag{2}$$

The kilovoltampere load served by one of the feeders is

$$S_4 = D\times l_4^2 \text{ kVA}. \tag{3}$$

Thus, the total kilovoltampere load served by all four feeders is

$$TS_4 = 4D\times l_4^2 \text{ kVA}. \tag{4}$$

The percent voltage drop in the main feeder is

$$\%VD_{4,\text{main}} = \frac{2}{3}\times K\times D\times l_4^3. \tag{5}$$

The load current in the main feeder at the feed point a is

$$I_4 = \frac{S_4}{\sqrt{3}\times V_{L-L}} \tag{6}$$

or

$$I_4 = \frac{D \times l_4^2}{\sqrt{3} \times V_{L-L}}. \tag{7}$$

The ampacity, that is, the current-carrying capacity, of a conductor selected for the main feeder should be larger than the current values that can be obtained from Equations 4.27 and 4.28.

On the other hand, for a hexagonally shaped distribution substation area served by six primary feeders, that is, $n = 6$, the area served by one of the six feeders is

$$A_6 = \frac{1}{\sqrt{3}} \times l_6^2 \text{ mi}^2. \tag{8}$$

The total area served by all six feeders is

$$TA_6 = \frac{6}{\sqrt{3}} \times l_6^2 \text{ mi}^2. \tag{9}$$

The kilovoltampere load served by one of the feeders is

$$S_6 = \frac{1}{\sqrt{3}} \times D \times l_6^2 \text{ kVA}. \tag{10}$$

Therefore, the total kilovoltampere load served by all six feeders is

$$TS_6 = \frac{6}{\sqrt{3}} \times D \times l_6^2 \text{ kVA}. \tag{11}$$

The percent voltage drop in the main feeder is

$$\%\text{VD}_{6,\text{main}} = \frac{2}{3\sqrt{3}} \times K \times D \times l_6^3. \tag{12}$$

The load current in the main feeder at the feed point a is

$$I_6 = \frac{S_6}{\sqrt{3} \times V_{L-L}} \tag{13}$$

or

$$I_6 = \frac{D \times l_6^2}{3 \times V_{L-L}}. \tag{14}$$

The relationship between the service areas of the four- and six-feeder patterns can be found under two assumptions: (*i*) feeder circuits are thermally limited and (*ii*) feeder circuits are voltage-drop-limited.

For Thermally Limited Feeder Circuits. For a given conductor size and neglecting voltage drop,

$$I_4 = I_6. \tag{15}$$

Substituting eq 7 and 14 into eq 15.

$$\frac{D \times l_4^2}{\sqrt{3} \times V_{L-L}} = \frac{D \times l_6^2}{3 \times V_{L-L}} \tag{16}$$

from Equation 16

$$\left(\frac{l_6}{l_4}\right)^2 = \sqrt{3}. \tag{17}$$

Also, by dividing Equation 9 by Equation 2

$$\frac{TA_6}{TA_4} = \frac{6l\sqrt{3}l_6^2}{4l_4^2} = \frac{\sqrt{3}}{2}\left(\frac{l_6}{l_4}\right)^2. \tag{18}$$

Substituting Equation 17 into Equation 18

$$\frac{TA_6}{TA_4} = \frac{3}{2} \tag{19}$$

or

$$TA_6 = 1.50\ TA_4. \tag{20}$$

Therefore, the six feeders can carry 1.50 times as much load as the four feeders if they are thermally loaded.

For Voltage-Drop-Limited Feeder Circuits. For a given conductor size and assuming equal percent voltage drop,

$$\%VD_4 = \%VD_6. \tag{21}$$

Substituting Equations 5 and 12 into Equation 21 and simplifying the result,

$$I_4 = 0.833 \times I_6. \tag{22}$$

From Equation 9 the total area served by all six feeders is

$$TA_6 = \frac{6}{\sqrt{3}} \times l_6^2. \tag{23}$$

Substituting Equation 22 into Equation 2 the total area served by all four feeders is

$$TA_4 = 2.78 \times l_6^2. \tag{24}$$

Dividing Equation 23 by Equation

$$\frac{TA_6}{TA_4} = \frac{5}{4} \qquad 25$$

or

$$TA_6 = 1.25\ TA_4. \tag{26}$$

Therefore, the six feeders can carry only 1.25 times as much load as the four feeders if they are voltage-drop-limited.

DERIVATION OF THE *K* CONSTANT

Consider the primary-feeder main . Here, the effective impedance $\bar{Z}$ of the three-phase main depends on the nature of the load. For example, for a lumped-sum load connected at the end of the main, as shown in the figure, the effective impedance is

$$\bar{Z} = z \times l\ \Omega/\text{phase} \tag{1}$$

where z is the impedance of three-phase main line [Ω/(mi · phase)] and, l is the length of the feeder main (mi).

When the load is uniformly distributed, the effective impedance is

$$\bar{Z} = \frac{1}{2} \times z \times l\ \Omega/\text{phase}. \tag{2}$$

When the load has an increasing load density, the effective impedance is

$$\bar{Z} = \frac{2}{3} \times z \times l\ \Omega/\text{phase}. \tag{3}$$

Taking the receiving-end voltage as the reference phasor,

$$\bar{V}_r = V_r \angle 0^\circ \tag{4}$$

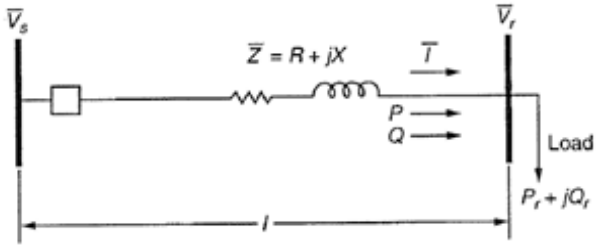

FIGURE 2.4 An illustration of a primary-feeder main.

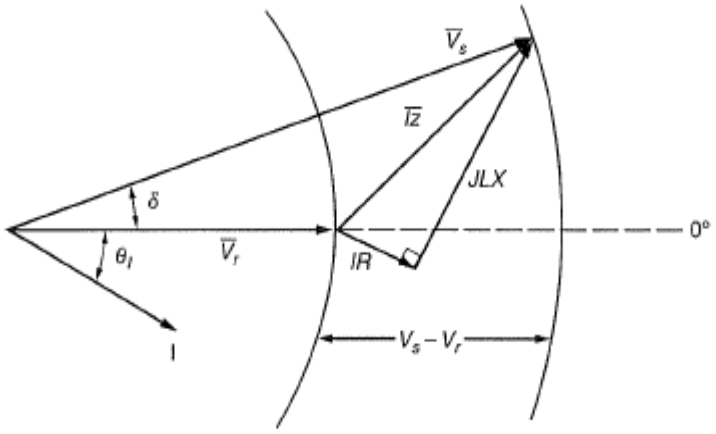

FIGURE 2.5 Phasor diagram.

from the phasor diagram given in Figure 4.21, the sending-end voltage is

$$\overline{V}_s = V_s \angle \delta. \tag{5}$$

The current is

$$\overline{I} = I \angle -\theta \tag{6a}$$

and the power factor angle is

$$\begin{aligned} \theta &= \theta_{\overline{V}_s} - \theta_{\overline{I}} \\ &= 0^\circ - \theta_{\overline{I}} = -\theta_{\overline{I}} \end{aligned} \tag{6b}$$

and the power factor is a lagging one. When the real power P and the reactive power Q flow in opposite directions, the power factor is a *leading* one.

Here, the per unit (pu) voltage regulation is defined as

$$\mathrm{VR}_{pu} = \frac{V_s - V_r}{V_r} \tag{7}$$

and the percent voltage regulation is

$$\%\mathrm{VR}_{pu} = \frac{V_s - V_r}{V_r} \times 100 \tag{8}$$

or

$$\%\mathrm{VR} = \mathrm{VR}_{pu} \times 100 \tag{9}$$

whereas the pu voltage drop is defined as

$$\mathrm{VD}_{pu} = \frac{V_s - V_r}{V_B} \tag{10}$$

where V_B is normally selected to be V_r.

Hence, the percent voltage drop is

$$\%\text{VD} = \frac{V_s - V_r}{V_B} \times 100 \tag{11}$$

or

$$\%\text{VD} = \text{VD}_{pu} \times 100 \tag{12}$$

where V_B is the arbitrary base voltage. The base secondary voltage is usually selected as 120 V. The base primary voltage is usually selected with respect to the potential transformation (PT) ratio used.

Common PT Ratios	V_B
20	2400 V
60	7200 V
100	12,000 V

voltage drop in main feeder n=1,2 the sending-end voltage is

$$\bar{V}_s = V_r + \overline{IZ} \tag{13}$$

or

$$V_s(\cos\delta + j\sin\delta) = V_r\angle 0^\circ + I(\cos\theta - j\sin\theta)(R + jX). \tag{14}$$

The quantities in Equation 14 can be either all in pu or in the MKS (or SI) system. Use line-to-neutral voltages for single-phase three-wire or three-phase three- or four-wire systems.

In typical *distribution* circuits,

$$R \cong X$$

and the voltage angle δ is closer to zero or typically

$$0^\circ \le \delta \le 4^\circ$$

whereas in typical *transmission* circuits,

$$\delta \cong 0^\circ$$

since X is much larger than R.

Therefore, for a typical *distribution* circuit, the sin δ can be neglected in Equation 4.61. Hence

$$V_s = V_s \cos\delta$$

and Equation 14 becomes

$$V_s = V_r + IR\cos\theta + IX\sin\theta. \tag{15}$$

Therefore the pu voltage drop, for a lagging power factor, is

$$\mathrm{VD}_{pu} = \frac{IR\cos\theta + IX\sin\theta}{V_B} \tag{16}$$

and it is a positive quantity. The VD_{pu} is negative when there is a leading power factor due to shunt capacitors or when there is a negative reactance X due to series capacitors installed in the circuits.

The complex power at the receiving end is

$$P_r + jQ_r = \bar{V}_r \bar{I}^*. \tag{17}$$

Therefore,

$$\bar{I} = \frac{P_r - jQ_r}{\bar{V}_r} \tag{18}$$

since

$$\bar{V}_r = V_r \angle 0°.$$

Substituting Equation 18 into Equation 14 , which is the exact equation since the voltage angle δ is not neglected, the sending-end voltage can be written as

$$\bar{V}_s = V_r \angle 0° + \frac{RP_r + XQ_r}{V_r \angle 0°} - j\frac{RQ_r - XP_r}{V_r \angle 0°} \tag{19}$$

or approximately,

$$V_s \cong V_r + \frac{RP_r + XQ_r}{V_r}. \tag{20}$$

Substituting Equation 20 into Equation 10

$$\mathrm{VD}_{pu} \cong \frac{RP_r + XQ_r}{V_r V_B} \tag{21}$$

or

$$\mathrm{VD}_{pu} \cong \frac{(S_r/V_r)R\cos\theta + (S_r/V_r)X\sin\theta}{V_B} \tag{22}$$

or

$$\mathrm{VD}_{pu} \cong \frac{S_r \times R\cos\theta + S_r \times X\sin\theta}{V_r V_B} \tag{23}$$

since

$$P_r = S_r \cos\theta \text{ W} \tag{24}$$

and

$$Q_r = S_r \sin\theta \text{ var.} \tag{25}$$

Equations 22 and 23 can also be derived from Equation 16 since

$$S_r = V_r I \text{ VA.} \tag{26}$$

The quantities in Equations 21 and 23 can be either all in pu or in the SI system. Use the line-to-neutral voltage values and per phase values for the P_r, Q_r, and S_r.

To determine the K constant, use Equation

$$\text{VD}_{pu} \cong \frac{RP_r + XQ_r}{V_r V_B}$$

or

$$\text{VD}_{pu} \cong \frac{(S_{3\phi})(s)(r\cos\theta + x\sin\theta)\left(\frac{1}{3}\times 1000\right)}{V_r V_B} \text{ pu V} \tag{27}$$

or

$$\text{VD}_{pu} = s \times K \times S_{3\phi} \text{ pu V} \tag{28}$$

or

$$\text{VD}_{pu} = s \times K \times S_n \text{ pu V} \tag{29}$$

$$\tag{30}$$

where

$$K \cong \frac{(r\cos\theta + x\sin\theta)\left(\frac{1}{3}\times 1000\right)}{V_r V_B}.$$

Therefore,

$K = f$ (conductor size, spacing, cos θ, V_B)

and it has the unit of

$$\frac{\text{VD}_{pu}}{\text{arbitrary no. of kVA} \cdot \text{mi}}. \tag{31}$$

To get the percent voltage drop, multiply the right side of Equation 4.77 by 100, so that

$$K \cong \frac{(r\cos\theta + x\sin\theta)\left(\frac{1}{3}\times 1000\right)}{V_r V_B} \times 100 \tag{32}$$

which has the unit of

$$\frac{\%VD}{\text{arbitrary no. of kVA} \cdot \text{mi}}.$$

In Equations 27 through 29 , s is the effective length of the feeder main which depends on the nature of the load. For example, *when the load is connected at the end of the main as lumped sum*, the effective feeder length is

$$s = l \text{ unit length}$$

when the load is uniformly distributed along the main,

$$s = \frac{1}{2} \times l \text{ unit length}$$

when the load has an increasing load density,

$$s = \frac{2}{3} \times l \text{ unit length.}$$

RADIAL FEEDERS WITH UNIFORMLY DISTRIBUTED LOAD

The single-line diagram, shown in Figure 2.6. illustrates a three-phase feeder main having the same construction, that is, in terms of cable size or open-wire size and spacing, along its entire length l. Here, the line impedance is $z = r + jx$ per unit length.

The load flow in the main is assumed to be perfectly balanced and uniformly distributed at all locations along the main. In practice, a reasonably good phase balance sometimes is realized when single-phase and open-wye laterals are wisely distributed among the three phases of the main.

Assume that there are many closely spaced loads and/or lateral lines connected to the main but not shown in Figure 2.6. Since the load is uniformly distributed along the main, as shown in Figure 2.7., the load current in the main is a function of the distance. Therefore, in view of the many closely spaced small loads, a differential tapped-off load current $d\bar{I}$, which corresponds to a dx differential distance, is to be used as an idealization. Here, l is the total length of the feeder and x is the distance of the point 1 on the feeder from the beginning end of the feeder. Therefore, the distance of point 2 on the feeder from the beginning end of the feeder is $x + dx$. $\bar{I}_s$ is the sending-end current at the feeder breaker, and $\bar{I}_r$ is the receiving-end current. $\bar{I}_{x1}$ and $\bar{I}_{x2}$ are the currents in the main at points 1 and 2, respectively. Assume that all loads connected to the feeder have the same power factor.

The following equations are valid both in per unit or per phase (line-to-neutral) dimensional variables. The circuit voltage is either primary or secondary, and therefore shunt capacitance currents may be neglected.

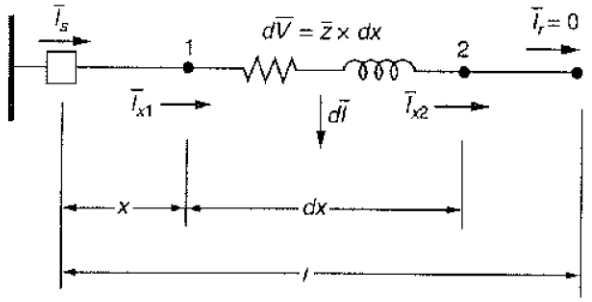

FIGURE 2.6. A radial feeder.

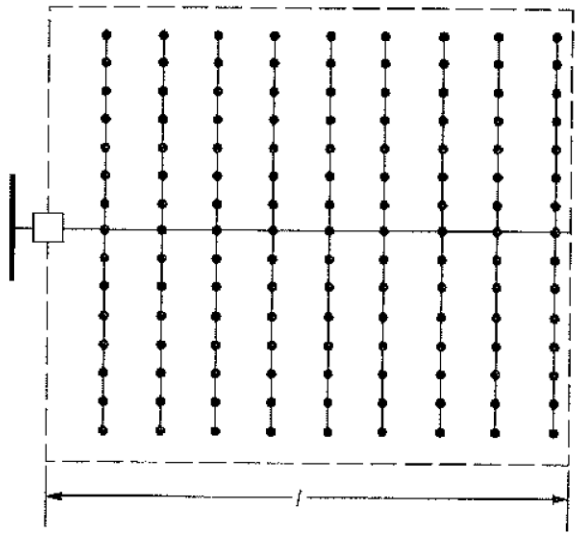

FIGURE 2.7. A uniformly distributed main feeder.

As the total load is uniformly distributed from $x = 0$ to $x = l$,

$$\frac{d\bar{I}}{dx} = \bar{k}, \tag{1}$$

which is a constant.

Therefore $\bar{I}_x$, that is, the current in the main of some x distance away from the circuit breaker, can be found as a function of the sending-end current $\bar{I}_S$ and the distance x. This can be accomplished either by inspection or by writing a current equation containing the integration of the $d\bar{I}$. Therefore, for the dx distance,

$$\bar{I}_{x1} = \bar{I}_{x2} + d\bar{I} \tag{2}$$

or

$$\bar{I}_{x2} = \bar{I}_{x1} - d\bar{I}. \tag{3}$$

From Equation 3

$$\bar{I}_{x2} = \bar{I}_{x1} - d\bar{I}\frac{dx}{dx} \tag{4}$$

$$= \bar{I}_{x1} - \frac{d\bar{I}}{dx}dx$$

or

$$\bar{I}_{x2} = \bar{I}_{x1} - \bar{k}dx$$

where

$$\bar{k} = \frac{d\bar{I}}{dx} \tag{5}$$

or, approximately,

$$\bar{I}_{x2} = \bar{I}_{x1} - kd\bar{I} \tag{6}$$

and

$$\bar{I}_{x1} = \bar{I}_{x2} + kd\bar{I} \tag{7}$$

Therefore, for the total feeder,

$$I_r = I_s - k \times l \tag{8}$$

and

$$I_s = I_r + k \times l. \tag{9}$$

When $x = l$, from Equation 5.15,

$$I_r = I_s - k \times l = 0$$

hence

$$k = \frac{I_s}{l} \tag{9}$$

and since $x = l$,

$$I_r = I_s - k \times x. \tag{10}$$

Therefore, substituting Equation 9 into Equation 10,

$$I_r = I_s\left(1 - \frac{x}{l}\right). \tag{11}$$

For a given x distance,

$$I_x = I_r$$

thus Equation 11 can be written as:

$$I_x = I_s\left(1 - \frac{x}{l}\right), \tag{12}$$

which gives the current in the main at some x distance away from the circuit breaker. Note that from Equation 12

$$I_s = \begin{cases} I_r = 0 & \text{at } x = l \\ I_r = I_s & \text{at } x = 0. \end{cases} \tag{13}$$

The differential series voltage drop $d\bar{V}$ and the differential power loss dP_{LS} because of I^2R losses can also be found as a function of the sending-end current I_s and the distance x in a similar manner.

Therefore, the differential series voltage drop can be found as:

$$d\bar{V} = I_x \times z dx$$

or substituting Equation 12 into Equation13

$$d\bar{V} = I_s \times z\left(1 - \frac{x}{l}\right)dx. \tag{14}$$

Also, the differential power loss can be found as:

$$dP_{LS} = I_x^2 \times r dx \tag{15}$$

or substituting Equation 12 into Equation 15,

$$dP_{LS} = \left[I_s\left(1 - \frac{x}{l}\right)\right]^2 r dx \tag{16}$$

The series voltage drop VD_x because of I_x current at any point x on the feeder is

$$VD_x = \int_0^x dV. \tag{17}$$

Substituting Equation 14 into Equation 17

$$VD_x = \int_0 I_s \times z\left(1 - \frac{x}{l}\right)dx \tag{18}$$

or

$$VD_x = I_s \times z \times x\left(1 - \frac{x}{2l}\right). \tag{19}$$

Therefore, the total series voltage drop $\sum VD_x$ on the main feeder when $x = l$ is:

$$\sum VD_x = I_s \times z \times l\left(1 - \frac{1}{2l}\right)$$

or

$$\sum VD_x = \frac{1}{2} z \times l \times I_s. \tag{20}$$

The total copper loss per phase in the main because of I^2R losses is:

$$\sum P_{LS} = \int_0^l dP_{LS} \tag{21}$$

or

$$\sum P_{LS} = \frac{1}{3} I_s^2 \times r \times l \tag{22}$$

Therefore, from Equation 20 the distance x from the beginning of the main feeder at which location the total load current I_s may be concentrated, that is, lumped for the purpose of calculating the total voltage drop, is

$$x = \frac{l}{2}$$

whereas, from Equation 5.30, the distance x from the beginning of the main feeder at which location the total load current I_s may be lumped for the purpose of calculating the total power loss is

$$x = \frac{l}{3}$$

RADIAL FEEDERS WITH NONUNIFORMLY DISTRIBUTED LOAD

The single-line diagram, shown in Figure 2.8, illustrates a three-phase feeder main which has the tapped-off load increasing linearly with the distance x. Note that the load is zero when $x = 0$. The plot of the sending-end current versus the x distance along the feeder main gives the curve shown in Figure 2.9.

From Figure 2.9, the negative slope can be written as:

$$\frac{dI_x}{dx} = -k \times I_s \times x. \tag{1}$$

Here, the k constant can be found from

$$I_s = \int_{x=0}^{l} -dIx \tag{2}$$

$$= \int_{x=0}^{l} k \times I_s \times x dx$$

or

$$I_s = k \times I_s \times \frac{l^2}{2}. \tag{3}$$

From Equation 3, the k constant is

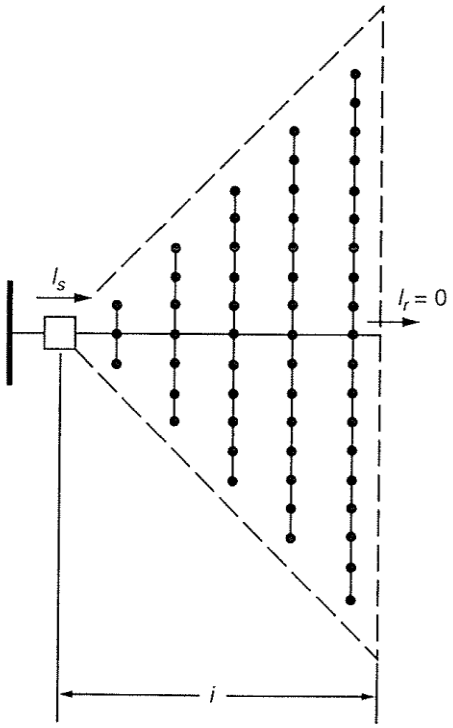

FIGURE 2.8 A uniformly increasing load.

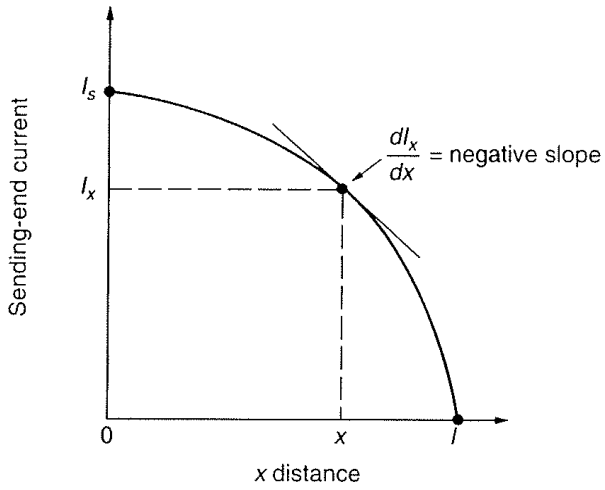

FIGURE 2.9 The sending-end current as a function of the distance along a feeder.

$$k = \frac{2}{l^2}. \tag{4}$$

Substituting Equation 4 into Equation 1,

$$\frac{dI_x}{dx} = -2I_s \times \frac{x}{l^2}. \tag{5}$$

Therefore, the current in the main at some x distance away from the circuit breaker can be found as

$$I_x = I_s\left(1 - \frac{x^2}{l^2}\right). \tag{6}$$

Hence the differential series voltage drop is

$$d\bar{V} = I_x \times z dx \tag{7}$$

or

$$d\bar{V} = I_s \times z\left(1 - \frac{x^2}{l^2}\right)dx. \tag{8}$$

Also, the differential power loss can be found as

$$dP_{LS} = I_x^2 \times r dx \tag{9}$$

or

$$dP_{LS} = I_s^2 \times r\left(1 - \frac{x^2}{l^2}\right)^2 dx. \tag{10}$$

The series voltage drop because of I_x current at any point x on the feeder is

$$VD_x = \int_0^x dV. \tag{11}$$

Substituting Equation into Equation 5.41 and integrating the result,

$$VD_x = I_s \times z \times x\left(1 - \frac{x^2}{3l^2}\right). \tag{12}$$

Therefore, the total series voltage drop on the main feeder when $x = l$ is

$$\sum VD_x = \frac{2}{3} z \times l \times I_s. \tag{13}$$

The total copper loss per phase in the main as a result of I^2R losses is

$$\sum P_{LS} = \int_0^l dP_{LS} \tag{14}$$

or

$$\sum P_{LS} = \frac{8}{15} I_s^2 \times r \times l. \tag{15}$$

Definitions of various terms related to system loading.

Load Electrical power needed in kW or kVA

Demand The power requirement (in kVA or kW) at the load averaged over a specified interval (15 min or 30 min). Sometimes it is given in amperes at a specified voltage level.

Demand Intervals The time interval specified for demand (D_i), usually 15 min or 30 min. This is obtained from daily demand curves or load duration curves.

Maximum Demand The maximum load (or the greatest if a unit or group of units) that occurred in a period of time as specified. This can be daily, weekly, seasonal or on annual basis (for billing purpose in India it is monthly and in kVA).

Demand Factor The ratio of maximum demand to the total load connected to the system

Connected Load The sum total of the continuous rating of all the apparatus, equipment, etc., Connected to the system.

Utilization Factor The ratio of maximum demand to the rated capacity of the system.

Load Factor The ratio of average load in given interval of time to the peak during that interval.

Annual Load Factor The ratio of total energy supplied in an year to annual peek load multiplied by 8760.

Diversity Factor (D_f) The ratio of sum of the individual maximum demands of various sub-divisions of the system to the maximum demand of the entire or complete system.

Coincident Maximum Demand (D_g) Any demand that occurs simultaneously with any other demand and also the sum of any set of coincident demands.

Coincidence factor (C_f) This is usually referred to a group of consumers or loads. It is defined as the ratio of coincident maximum demand D_g to sum total of maximum demands of individual or group of loads.

Generally, it is taken as the reciprocal of the diversity factor.

Load Diversity The difference between the sum of peaks of two or more individual loads and the peak of combined load.

$$\text{Load diversity} = \Sigma D_i - D_g \qquad 1$$

D_i = individual maximum demand

D_g = coincident maximum demand

Contribution Factor This is a factor that is usually referred in distribution systems regarding the importance of weighted effect of a particular load.

If $C_1, C_2 \ldots C_n$ are the contribution factors of each of the n individual loads and $D_1, D_2, D_3 \ldots\ldots\ldots D_n$ are their maximum demands.

D_g = coincident maximum demand is taken as

$$D_g = C_1D_1 + C_2D_2 + \ldots\ldots\ldots C_nD_n = \sum_{i=1}^{n} C_iD_i \qquad \ldots 2$$

$$\text{Hence } c_f = \text{coincidence factor is} = \frac{\sum C_iD_i}{\sum D_i} \qquad \ldots 3$$

The contribution factor $C_i = C_f$ when all the demands equally affect or influence the maximum demand.

- **LOSS FACTORS**

This is the ratio of average power loss in the system to power loss during peak load period and referred to the variable power losses, i.e., copper losses or power loss in conductors or windings but not to no load losses in transformers, etc.

LOADS: VARIOUS TYPES OF LOADS.

Types of Loads

A device which taps electrical energy from the electric power system is called a load on the system. The load may be resistive (*e.g.*, electric lamp), inductive (*e.g.*, induction motor), capacitive or some combination of them. The various types of loads on the power system are :

(*i*) Domestic load.

Domestic load consists of lights, fans, refrigerators, heaters, television, small motors for pumping water etc. Most of the residential load occurs only for some hours during the day (*i.e.*, 24 hours) *e.g.*, lighting load occurs during night time and domestic appliance load occurs for only a few hours. For this reason, the load factor is low (10% to 12%).

(*ii*) Commercial load.

Commercial load consists of lighting for shops, fans and electric appliances used in restaurants etc. This class of load occurs for more hours during the day as compared to the domestic load. The commercial load has seasonal variations due to the extensive use of air conditioners and space heaters.

(*iii*) Industrial load.

Industrial load consists of load demand by industries. The magnitude of industrial load depends upon the type of industry. Thus, small scale industry requires load up to 25 kW, medium scale industry between 25kW and 100 kW and large-scale industry requires load above 500 kW. Industrial loads are generally not weather dependent.

(*iv*) Municipal load.

Municipal load consists of street lighting, power required for water supply and drainage purposes. Street lighting load is practically constant throughout the hours of the night.

For water supply, water is pumped to overhead tanks by pumps driven by electric motors. Pumping is carried out during the off-peak period, usually occurring during the night. This helps to improve the load factor of the power system.

(*v*) Irrigation load.

This type of load is the electric power needed for pumps driven by motors to supply water to fields. Generally, this type of load is supplied for 12 hours during night.

(*vi*) Traction load.

This type of load includes tram cars, trolley buses, railways etc. This class of load has wide variation. During the morning hour, it reaches peak value because people have to go to their work place. After morning hours, the load starts decreasing and again rises during evening since the people start coming to their homes.

RELATION BETWEEN LOAD AND LOSS FACTOR:

In general, load changes occur continuously for any type of load and the load pattern on any feeder or distributor can be idealized and simplified approach for load on a feeder can be taken as shown in Fig.

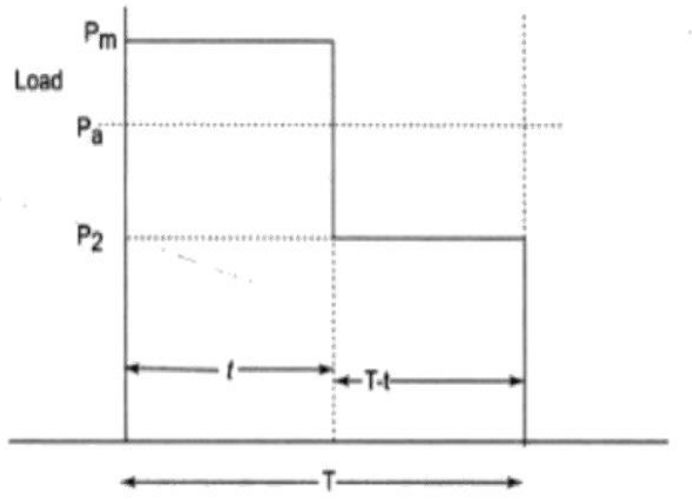

Let a peak load P_m exist for duration of 't' and p_2 be the off peak load during any interval 'T' considered. Let P_a be the average load during the period 'T'.

$$P_a = \frac{P_m \times t + P_2(T-t)}{T} \quad \ldots. \; 4$$

But load factor $= \frac{P_{av}}{P_{peak}} = \frac{P_a}{P_m}$

For the duration 'T' considered

$$\text{Load factor} = \frac{P_m \times t + P_2(T-t)}{P_m \times T}$$

$$= \frac{t}{T} + \frac{P_2}{P_m}\frac{(T-t)}{T} \quad \ldots\ldots 5$$

$$\text{and loss factor} = \frac{(Power\ loss(avg)\ in\ given\ time\ period)}{powoer\ loss(max.loss) \times the\ total\ duration}$$

This can be extended to the whole duration of 24 hours by considering $P_1, P_2 \ldots P_k$ as the loads occurring over a duration of $t_1, t_2, \ldots\ldots t_k$ with P_m as the peak load. If P_{LS} is average power loss and P_{Lm} power loss corresponding to peak load P_m.

$$\text{Loss factor} = \frac{P_{LS}}{P_{lm}} = \frac{P_{LS}t + P_m(T-t)}{P_{lm} \times T} \quad \ldots(6)$$

Since losses are proportional to $I^2 \times P^2$

(∵ voltage is constant)

$$\text{Loss factor} = \frac{t}{T} + \left(\frac{P_{avg}}{P_m}\right)^2\left(\frac{T-t}{T}\right) \quad \ldots(7)$$

(a) This is $= t/T$ if off peak load i.e $P_2 \times 0$,(same as load factor)

(b) For short time peak $t << T$ loss factor $\approx \left(\frac{P_{avg}}{P_m}\right) = (load\ factor)^2$ .8

(c) In general for variable industrial loads loss factor, is taken as

$= 0.3(\text{load factor}) + 0.7\ (\text{load factor})^2$ ... 9

DETAILED DESCRIPTION OF DISTRIBUTION TRANSFORMER LOADING,

Loads on a distribution feeder can modelled as wye-connected or delta connected .The loads can be three-phase, two-phase, or single-phase with any degree of unbalance, and can be modelled as:

• Constant real and reactive power (constant PQ)

• Constant current

• Constant impedance

• Any combination of the above

The load models developed are to be used in the iterative process of a power flow program where the load voltages are initially assumed. One of the results of the power-flow analysis is to replace the assumed voltages with the actual operating load voltages. All models are initially defined by a complex power per phase and an assumed line-to-neutral voltage (wye load) or an assumed line-to-line voltage (delta load). The units of the complex power can be in volt-amperes and volts, or per-unit volt-amperes and per-unit voltages. For all loads the line currents entering the load are required in order to perform the power-flow analysis.

1. Wye-Connected Loads

Figure 2.15 is the model of a wye-connected load. The notation for the specified complex powers and voltages are as follows:

$$\text{Phase a:} \quad |S_a| \angle \theta_a = P_a + jQ_a \quad \text{and} \quad |V_{an}| \angle \delta_a \tag{1}$$

$$\text{Phase b:} \quad |S_b| \angle \theta_b = P_b + jQ_b \quad \text{and} \quad |V_{bn}| \angle \delta_b \tag{2}$$

$$\text{Phase c:} \quad |S_c| \angle \theta_c = P_c + jQ_c \quad \text{and} \quad |V_{cn}| \angle \delta_c \tag{3}$$

- **Constant Real and Reactive Power Loads**

The line currents for constant real and reactive power loads (PQ loads) are given by:

$$IL_a = \left(\frac{S_a}{V_{an}}\right)^* = \frac{|S_a|}{|V_{an}|}\underline{/\delta_a - \theta_a} = |IL_a|\underline{/\alpha_a}$$

$$IL_b = \left(\frac{S_b}{V_{bn}}\right)^* = \frac{|S_b|}{|V_{bn}|}\underline{/\delta_b - \theta_b} = |IL_b|\underline{/\alpha_b}$$

$$IL_c = \left(\frac{S_c}{V_{cn}}\right)^* = \frac{|S_c|}{|V_{cn}|}\underline{/\delta_c - \theta_c} = |IL_c|\underline{/\alpha_c}$$

4

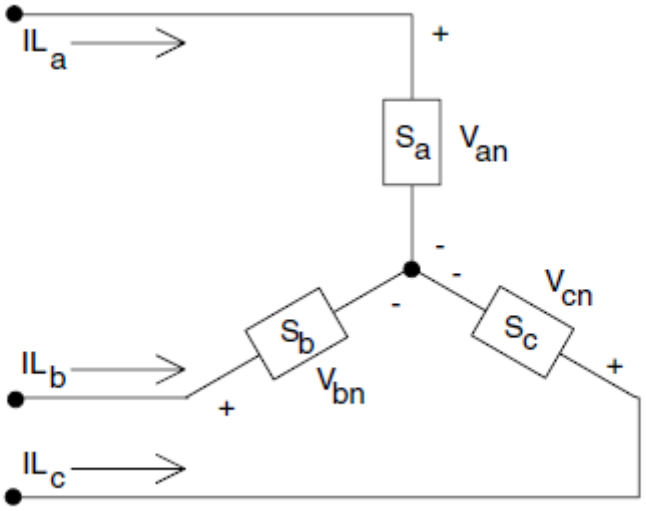

FIGURE 2.16 Y-CONNECTED LOAD

In this model the line-to-neutral voltages will change during each iteration until convergence is achieved.

- ## Constant Impedance Loads

The constant load impedance is first determined from the specified complex power and assumed line-to-neutral voltages:

$$Z_a = \frac{|V_{an}|^2}{S_a^*} = \frac{|V_{an}|^2}{|S_a|}\underline{/\theta_a} = |Z_a|\underline{/\theta_a}$$

$$Z_b = \frac{|V_{bn}|^2}{S_b^*} = \frac{|V_{bn}|^2}{|S_b|}\underline{/\theta_b} = |Z_b|\underline{/\theta_b}$$

$$Z_c = \frac{|V_{cn}|^2}{S_c^*} = \frac{|V_{cn}|^2}{|S_c|}\underline{/\theta_c} = |Z_c|\underline{/\theta_c}$$

5

The load currents as a function of the constant load impedances are given by:

$$IL_a = \frac{V_{an}}{Z_a} = \frac{|V_{an}|}{|Z_a|} \underline{/\ \delta_a - \theta_a} = |IL_a| \underline{/\ \alpha_a}$$
$$IL_b = \frac{V_{bn}}{Z_b} = \frac{|V_{bn}|}{|Z_b|} \underline{/\ \delta_b - \theta_b} = |IL_b| \underline{/\ \alpha_b} \qquad 6$$
$$IL_c = \frac{V_{cn}}{Z_c} = \frac{|V_{cn}|}{|Z_c|} \underline{/\ \delta_c - \theta_c} = |IL_c| \underline{/\ \alpha_c}$$

In this model the line-to-neutral voltages will change during each iteration, but the impedance computed in Equation 5 will remain constant.

- **Constant Current Loads**

  In this model the magnitudes of the currents are computed according to Equations 4 and are then held constant while the angle of the voltage (δ) changes, resulting in a changing angle on the current so that the power factor of the load remains constant:

$$IL_a = |IL_a| \underline{/\ \delta_a - \theta_a}$$
$$IL_b = |IL_b| \underline{/\ \delta_b - \theta_b} \qquad 7$$
$$IL_c = |IL_c| \underline{/\ \delta_c - \theta_c}$$

where δ_{abc} = Line-to-neutral voltage angles
θ_{abc} = Power factor angles.

- **Combination Loads**

Combination loads can be modelled by assigning a percentage of the total load to each of the three above load models. The total line current entering the load is the sum of the three components.

2. Delta-Connected Loads

The model for a delta-connected load is shown in Figure 2.16. The notation for the specified complex powers and voltages in Figure 2.16 are as follows:

Phase ab: $|S_{ab}|\underline{/\theta_{ab}} = P_{ab} + jQ_{ab}$ and $|V_{ab}|\underline{/\delta_{ab}}$ 8

Phase bc: $|S_{bc}|\underline{/\theta_{bc}} = P_{bc} + jQ_{bc}$ and $|V_{bc}|\underline{/\delta_{bc}}$ 9

Phase ca: $|S_{ca}|\underline{/\theta_{ca}} = P_{ca} + jQ_{ca}$ and $|V_{ca}|\underline{/\delta_{ca}}$ .10

- **CONSTANT REAL AND REACTIVE POWER LOADS**

The currents in the delta connected loads are

$$IL_{ab} = \left(\frac{S_{ab}}{V_{ab}}\right)^* = \frac{|S_{ab}|}{|V_{ab}|}\underline{/\delta_{ab} - \theta_{ab}} = |IL_{ab}|\underline{/\alpha_{ab}}$$

$$IL_{bc} = \left(\frac{S_{bc}}{V_{bc}}\right)^* = \frac{|S_{bc}|}{|V_{bc}|}\underline{/\delta_{bc} - \theta_{bc}} = |IL_{bc}|\underline{/\alpha_{bc}} \quad \textbf{11}$$

$$IL_{ca} = \left(\frac{S_{ca}}{V_{ca}}\right)^* = \frac{|S_{ca}|}{|V_{ca}|}\underline{/\delta_{ca} - \theta_{ca}} = |IL_{ca}|\underline{/\alpha_{ac}}$$

In this model the line-to-line voltages will change during each iteration resulting in new current magnitudes and angles at the start of each iteration.

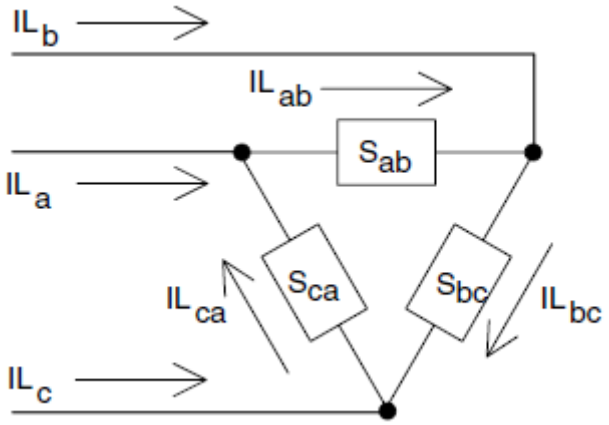

FIGURE 2.17. DELTA-CONNECTED LOAD

- **CONSTANT IMPEDANCE LOADS**

The constant load impedance is first determined from the specified complex power and line-to-line voltages:

$$Z_{ab} = \frac{|V_{ab}|^2}{S_{ab}^*} = \frac{|V_{ab}|^2}{|S_{ab}|} \underline{/\theta_{ab}} = |Z_{ab}| \underline{/\theta_{ab}}$$

$$Z_{bc} = \frac{|VL_{bc}|^2}{S_{bc}^*} = \frac{|V_{bc}|^2}{|S_{bc}|} \underline{/\theta_{bc}} = |Z_{bc}| \underline{/\theta_{bc}}$$

$$Z_{ca} = \frac{|V_{ca}|^2}{S_{ca}^*} = \frac{|V_{ca}|^2}{|S_{ca}|} \underline{/\theta_{ca}} = |Z_{ca}| \underline{/\theta_{ca}} \quad \textbf{12}$$

The delta load currents as functions of the constant load impedances are

$$IL_{ab} = \frac{V_{ab}}{Z_{ab}} = \frac{|V_{anb}|}{|Z_{ab}|} \underline{/\delta_{ab} - \theta_{ab}} = |IL_{ab}| \underline{/\alpha_{ab}}$$

$$IL_{bc} = \frac{V_{bc}}{Z_{bc}} = \frac{|V_{bc}|}{|Z_{bc}|} \underline{/\delta_{bc} - \theta_{bc}} = |IL_{bc}| \underline{/\alpha_{bc}}$$

$$IL_{ca} = \frac{V_{ca}}{Z_{ca}} = \frac{|V_{ca}|}{|Z_{ca}|} \underline{/\delta_{ca} - \theta_{ca}} = |IL_{ca}| \underline{/\alpha_{ca}} \quad \textbf{13}$$

In this model the line-to-line voltages will change during each iteration until convergence is achieved.

- **Constant Current Loads**

In this model the magnitudes of the currents are computed according to Equations 11 and then held constant while the angle of the voltage (δ) changes during each iteration. This keeps the power factor of the load constant:

$$IL_{ab} = |IL_{ab}| \underline{/\delta_{ab} - \theta_{ab}}$$

$$IL_{bc} = |IL_{bc}| \underline{/\delta_{bc} - \theta_{bc}}$$

$$IL_{ca} = |IL_{bca}| \underline{/\delta_{ca} - \theta_{ca}} \quad \textbf{14}$$

- **Combination Loads**

Combination loads can be modelled by assigning a percentage of the total load to each of the three above load models. The total delta current for each load is the sum of the three components.

- **Line Currents Serving a Delta-Connected Load**

The line currents entering the delta-connected load are determined by applying Kirchhoff's current law at each of the nodes of the delta. In matrix form the equations are

3. Two-Phase and Single-Phase Loads

In both the wye- and delta-connected loads, single-phase and two-phase loads are modelled by setting the currents of the missing phases to zero. The currents in the phases present are computed using the same appropriate equations for constant complex power, constant impedance, and constant current.

- **Shunt Capacitors**

Shunt capacitor banks are commonly used in distribution systems to help in voltage regulation and to provide reactive power support. The capacitor banks are modelled as constant susceptance's connected in either wye or delta. Similar to the load model, all capacitor banks are modelled as three-phase banks with the currents of the missing phases set to zero for single-phase and two-phase banks.

- **Wye-Connected Capacitor Bank**

The model of a three-phase wye connected shunt capacitor bank is shown in Figure 2.18. The individual phase capacitor units are specified in kvar and kV. The constant susceptance for each unit can be computed in Siemens. The susceptance of a capacitor unit is computed by:

$$B_c = \frac{kvar}{kV_{LN}^2 \cdot 1000} \text{ S} \qquad \textbf{1}$$

With the susceptance computed, the line currents serving the capacitor bank are given by:

$$\begin{aligned} IC_a &= jB_a \cdot V_{an} \\ IC_b &= jB_b \cdot V_{bn} \\ IC_c &= jB_c \cdot V_{cn} \end{aligned} \qquad \textbf{2}$$

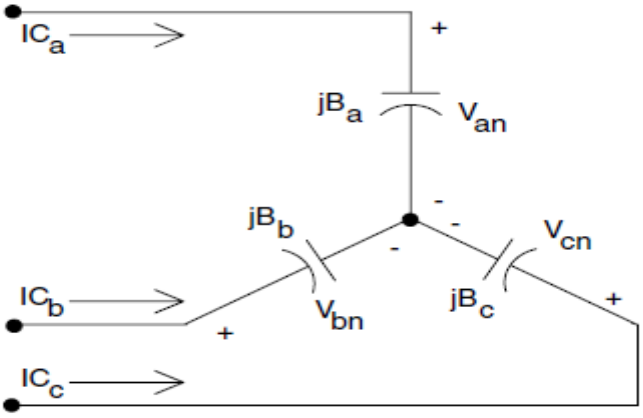

FIGURE 2.18. WYE-CONNECTED CAPACITOR BANK.

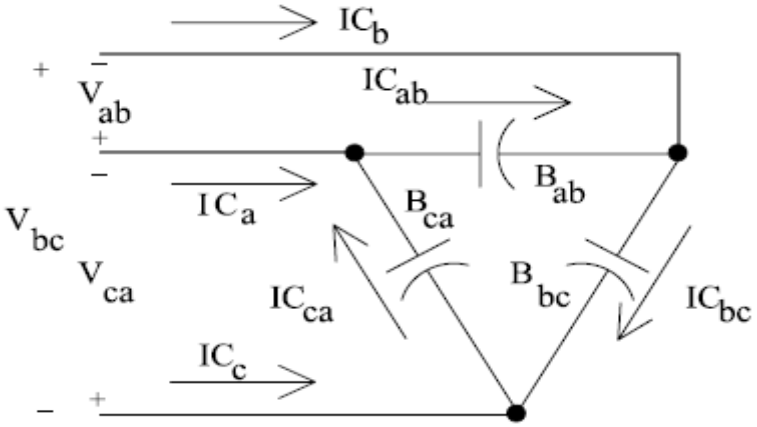

FIGURE 2.19. DELTA-CONNECTED CAPACITOR BANK.

- **Delta-Connected Capacitor Bank**

The model for a delta-connected shunt capacitor bank is shown in Figure 2.19. The individual phase capacitor units are specified in kvar and kV. For the delta-connected capacitors the kV must be the line-to-line voltage. The constant susceptance for each unit can be computed in Siemens. The susceptance of a capacitor unit is computed by:

$$B_c = \frac{kvar}{kV_{LL}^2 \cdot 1000} \text{ S} \quad \textbf{3}$$

With the susceptance computed, the delta currents serving the capacitor bank are given by:

$$IC_{ab} = jB_a \cdot V_{ab}$$
$$IC_{bc} = jB_b \cdot V_{bc}$$
$$IC_{ca} = jB_c \cdot V_{ca} \quad \textbf{4}$$

The line currents flowing into the delta-connected capacitors are computed by applying Kirchhoff's current law at each node. In matrix form the equations are

$$\begin{bmatrix} IC_a \\ IC_b \\ IC_c \end{bmatrix} = \begin{bmatrix} 1 & 0 & -1 \\ -1 & 1 & 0 \\ 0 & -1 & 1 \end{bmatrix} \cdot \begin{bmatrix} IC_{ab} \\ IC_{bc} \\ IC_{ca} \end{bmatrix}$$

EDSA

UNIT 3

DISTRIBUTION SYSTEM LOAD FLOW

SYLLABUS: Exact line segment model, Modified line model, approximate line segment model, Step Voltage Regulators, Line drop compensator, Forward/Backward sweep distribution load flow algorithm – Numerical problems

The modeling of distribution overhead and underground line segments is a critical step in the analysis of a distribution feeder. It is important in the line modeling to include the actual phasing of the line and the correct spacing between conductors. The method for the computation of the phase impedance and phase admittance matrices with no simplifying assumptions are developed. Those matrices will be used in the models for overhead and underground line segments.

Exact Line Segment Model:

The model of a three-phase, two-phase, or single-phase overhead or underground line is shown in Figure 1. When a line segment is two phase (V phase) or single phase, some of the impedance and values will be zero. In all cases the phase impedance and phase admittance matrices were 3 × 3. Rows and columns of zeros for the missing phases represent two-phase and single-phase lines. Therefore, one set of equations can be developed to model all overhead and underground line segments. The values of the impedances and admittances in Figure 1 represent the total impedances and admittances for the line.

For the line segment of Figure 1, the equations relating the input (node n) voltages and currents to the output (node m) voltages and currents are developed as follows.

Kirchhoff's current law applied at node m is represented by

$$\begin{bmatrix} Iline_a \\ Iline_b \\ Iline_c \end{bmatrix}_n = \begin{bmatrix} Ia \\ Ib \\ Ic \end{bmatrix}_m + \frac{1}{2} \cdot \begin{bmatrix} Y_{aa} & Y_{ab} & Y_{ac} \\ Y_{ba} & Y_{bb} & Y_{bc} \\ Y_{ca} & Y_{cb} & Y_{cc} \end{bmatrix} \cdot \begin{bmatrix} Vag \\ Vbg \\ Vcg \end{bmatrix}_m$$

…….. 6.1

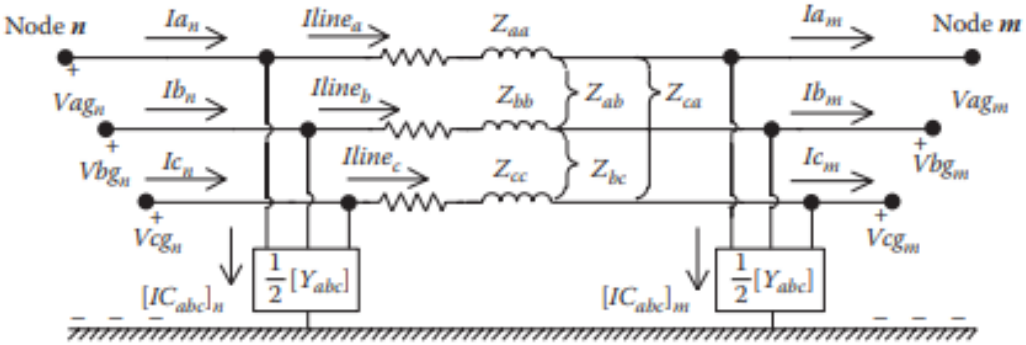

Fig 1: Three-phase line segment model

In condensed form Equation 6.1 becomes

$$[Iline_{abc}]_n = [I_{abc}]_m + \frac{1}{2}[Y_{abc}] \cdot [VLG_{abc}]_m \tag{6.2}$$

Kirchhoff's voltage law applied to the model gives

$$\begin{bmatrix} Vag \\ Vbg \\ Vcg \end{bmatrix}_n = \begin{bmatrix} Vag \\ Vbg \\ Vcg \end{bmatrix}_m + \begin{bmatrix} Z_{aa} & Z_{ab} & Z_{ac} \\ Z_{ba} & Z_{bb} & Z_{bc} \\ Z_{ca} & Z_{cb} & Z_{cc} \end{bmatrix} \cdot \begin{bmatrix} Iline_a \\ Iline_b \\ Iline_c \end{bmatrix}_m \tag{6.3}$$

In condensed form Equation 6.3 becomes

$$[VLG_{abc}]_n = [VLG_{abc}]_m + [Z_{abc}] \cdot [Iline_{abc}]_m \tag{6.4}$$

Substituting Equation 6.2 into Equation 6.4,

$$[VLG_{abc}]_n = [VLG_{abc}]_m + [Z_{abc}] \cdot \left\{ [I_{abc}]_m + \frac{1}{2}[Y_{abc}] \cdot [VLG_{abc}]_m \right\} \tag{6.5}$$

Collecting terms,

$$[VLG_{abc}]_n = \left\{ [U] + \frac{1}{2} \cdot [Z_{abc}] \cdot [Y_{abc}] \right\} \cdot [VLG_{abc}]_m + [Z_{abc}] \cdot [I_{abc}]_m \tag{6.6}$$

where

$$[U] = \begin{bmatrix} 1 & 0 & 0 \\ 0 & 1 & 0 \\ 0 & 0 & 1 \end{bmatrix} \tag{6.7}$$

Equation 6.6 is of the general form

$$[VLG_{abc}]_n = [a]\cdot[VLG_{abc}]_m + [b]\cdot[I_{abc}]_m \tag{6.8}$$

where

$$[a] = [U] + \frac{1}{2}\cdot[Z_{abc}]\cdot[Y_{abc}] \tag{6.9}$$

$$[b] = [Z_{abc}] \tag{6.10}$$

The input current to the line segment at node ***n*** is

$$\begin{bmatrix} I_a \\ I_b \\ I_c \end{bmatrix}_n = \begin{bmatrix} Iline_a \\ Iline_b \\ Iline_c \end{bmatrix}_m + \frac{1}{2}\cdot\begin{bmatrix} Y_{aa} & Y_{ab} & Y_{ac} \\ Y_{ba} & Y_{bb} & Y_{bc} \\ Y_{ca} & Y_{cb} & Y_{cc} \end{bmatrix}\cdot\begin{bmatrix} Vag \\ Vbg \\ Vcg \end{bmatrix}_n \tag{6.11}$$

In condensed form, Equation 6.11 becomes

$$[I_{abc}]_n = [Iline_{abc}]_m + \frac{1}{2}\cdot[Y_{abc}]\cdot[VLG_{abc}]_n \tag{6.12}$$

Substitute Equation 6.2 into Equation 6.12:

$$[I_{abc}]_n = [I_{abc}]_m + \frac{1}{2}[Y_{abc}]\cdot[VLG_{abc}]_m + \frac{1}{2}\cdot[Y_{abc}]\cdot[VLG_{abc}]_n \tag{6.13}$$

Substitute Equation 6.6 into Equation 6.13:

$$\begin{aligned}[I_{abc}]_n = {} & [I_{abc}]_m + \frac{1}{2}[Y_{abc}]\cdot[VLG_{abc}]_m \\ & + \frac{1}{2}\cdot[Y_{abc}]\cdot\left(\left\{[U] + \frac{1}{2}\cdot[Z_{abc}]\cdot[Y_{abc}]\right\}\cdot[VLG_{abc}]_m + [Z_{abc}]\cdot[I_{abc}]_m\right)\end{aligned} \tag{6.14}$$

Collecting terms in Equation 6.14,

$$\begin{aligned}[I_{abc}]_n = {} & \left\{[Y_{abc}] + \frac{1}{4}\cdot[Y_{abc}]\cdot[Z_{abc}]\cdot[Y_{abc}]\right\}\cdot[VLG_{abc}]_m \\ & + \left\{[U] + \frac{1}{2}\cdot[Z_{abc}]\cdot[Y_{abc}]\right\}[I_{abc}]_m\end{aligned} \tag{6.15}$$

Equation 6.15 is of the form

$$[I_{abc}]_n = [c]\cdot[VLG_{abc}]_m + [d]\cdot[I_{abc}]_m \tag{6.16a}$$

where

$$[c] = [Y_{abc}] + \frac{1}{4}\cdot[Y_{abc}]\cdot[Z_{abc}]\cdot[Y_{abc}] \tag{6.17}$$

$$[d] = [U] + \frac{1}{2}\cdot[Z_{abc}]\cdot[Y_{abc}] \tag{6.18}$$

Equations 6.8 and 6.16a can be put into partitioned matrix form:

$$\begin{bmatrix}[VLG_{abc}]_n \\ [I_{abc}]_n\end{bmatrix} = \begin{bmatrix}[a] & [b] \\ [c] & [d]\end{bmatrix}\cdot\begin{bmatrix}[VLG_{abc}]_m \\ [I_{abc}]_m\end{bmatrix} \tag{6.19}$$

Equation 6.19 is very similar to the equation used in transmission line analysis when the *A, B, C, D* parameters have been defined [1]. In the case here the *a, b, c, d* parameters are 3 × 3 matrices rather than single variables and will be referred to as the "generalized line matrices."

Equation 6.19 can be turned around to solve for the voltages and currents at node ***m*** in terms of the voltages and currents at node ***n***:

$$\begin{bmatrix}[VLG_{abc}]_m \\ [I_{abc}]_m\end{bmatrix} = \begin{bmatrix}[a] & [b] \\ [c] & [d]\end{bmatrix}^{-1}\cdot\begin{bmatrix}[VLG_{abc}]_n \\ [I_{abc}]_n\end{bmatrix} \tag{6.20}$$

The inverse of the *a, b, c, d* matrix is simple because the determinant is

$$[a]\cdot[d] - [b]\cdot[c] = [U] \tag{6.21}$$

Using the relationship of Equation 6.21, Equation 6.20 becomes

$$\begin{bmatrix}[VLG_{abc}]_m \\ [I_{abc}]_m\end{bmatrix} = \begin{bmatrix}[d] & -[b] \\ -[c] & [a]\end{bmatrix}\cdot\begin{bmatrix}[VLG_{abc}]_n \\ [I_{abc}]_n\end{bmatrix} \tag{6.22}$$

Since the matrix [*a*] is equal to the matrix [*d*], Equation 6.22 in expanded form becomes

$$[VLG_{abc}]_m = [a]\cdot[VLG_{abc}]_n - [b]\cdot[I_{abc}]_n \tag{6.23}$$

$$[I_{abc}]_m = -[c]\cdot[VLG_{abc}]_n + [d]\cdot[I_{abc}]_n \tag{6.24}$$

Solving Equation 6.8 for the bus m voltages gives

$$[VLG_{abc}]_m = [a]^{-1} \cdot \left\{ [VLG_{abc}]_n - [b] \cdot [I_{abc}]_m \right\} \tag{6.25}$$

Equation 6.25 is of the form

$$[b] = [Z_{abc}] = \begin{bmatrix} 0.8667 + j2.0417 & 0.2955 + j0.9502 & 0.2907 + j0.7290 \\ 0.2955 + j0.9502 & 0.8837 + j1.9852 & 0.2992 + j0.8023 \\ 0.2907 + j0.7290 & 0.2992 + j0.8023 & 0.8741 + j2.0172 \end{bmatrix}$$

$$[VLG_{abc}]_m = [A] \cdot [VLG_{abc}]_n - [B] \cdot [I_{abc}] \tag{6.26}$$

where

$$[A] = [a]^{-1} \tag{6.27}$$

$$[B] = [a]^{-1} \cdot [b] \tag{6.28}$$

The line-to-line voltages are computed by

$$\begin{bmatrix} V_{ab} \\ V_{bc} \\ V_{ca} \end{bmatrix}_m = \begin{bmatrix} 1 & -1 & 0 \\ 0 & 1 & -1 \\ -1 & 0 & 1 \end{bmatrix} \cdot \begin{bmatrix} V_{ag} \\ V_{bg} \\ V_{cg} \end{bmatrix}_m = [D] \cdot [VLG_{abc}]_m \tag{6.29}$$

where

$$[D] = \begin{bmatrix} 1 & -1 & 0 \\ 0 & 1 & -1 \\ -1 & 0 & 1 \end{bmatrix} \tag{6.30}$$

Because the mutual coupling between phases on the line segments is not equal, there will be different values of voltage drop on each of the three phases. As a result the voltages on a distribution feeder become unbalanced even when the loads are balanced. A common method of describing the degree of unbalance is to use the National Electrical Manufactures Association (NEMA) definition of voltage unbalance as given in Equation 6.31 [2].

$$V_{unbalance} = \frac{|Maximum\,Deviation\ from\ Average|}{|V_{average}|} \cdot 100\% \tag{6.31}$$

Example 6.1

A balanced three-phase load of 6000 kVA, 12.47 kV, 0.9 lagging power factor is being served at node ***m*** of a 10,000 ft three-phase line segment. The load voltages are rated and balanced 12.47 kV. The configuration and conductors of the line segment are those of Example 4.1. Determine the generalized line constant matrices [*a*], [*b*], [*c*], [*d*], [*A*], and [*B*]. Using the generalized matrices determine the line-to-ground voltages and line currents at the source end (node ***n***) of the line segment.

Solution

The phase impedance matrix and the shunt admittance matrix for the line segment as computed in Examples 4.1 and 5.1 are

$$[z_{abc}] = \begin{bmatrix} 0.4576 + j1.0780 & 0.1560 + j0.5017 & 0.1535 + j0.3849 \\ 0.1560 + j0.5017 & 0.4666 + j1.0482 & 0.1580 + j0.4236 \\ 0.1535 + j0.3849 & 0.1580 + j0.4236 & 0.4615 + j1.0651 \end{bmatrix} \Omega/\text{mile}$$

$$[y_{abc}] = j \cdot 376.9911 \cdot [C_{abc}] = \begin{bmatrix} j5.6711 & -j1.8362 & -j0.7033 \\ -j1.8362 & j5.9774 & -j1.169 \\ -j0.7033 & -j1.169 & j5.3911 \end{bmatrix} \mu S/\text{mile}$$

For the 10,000 ft line segment, the total phase impedance matrix and shunt admittance matrix are

$$[Z_{abc}] = \begin{bmatrix} 0.8667 + j2.0417 & 0.2955 + j0.9502 & 0.2907 + j0.7290 \\ 0.2955 + j0.9502 & 0.8837 + j1.9852 & 0.2992 + j0.8023 \\ 0.2907 + j0.7290 & 0.2992 + j0.8023 & 0.8741 + j2.0172 \end{bmatrix} \Omega$$

$$[Y_{abc}] = \begin{bmatrix} j10.7409 & -j3.4777 & -j1.3322 \\ -j3.4777 & j11.3208 & -j2.2140 \\ -j1.3322 & -j2.2140 & j10.2104 \end{bmatrix} \mu S$$

It should be noted that the elements of the phase admittance matrix are very small.

The generalized matrices computed according to Equations 6.9, 6.10, 6.17, and 6.18 are

$$[a] = [U] + \frac{1}{2} \cdot [Z_{abc}] \cdot [Y_{abc}] = \begin{bmatrix} 1.0 & 0 & 0 \\ 0 & 1.0 & 0 \\ 0 & 0 & 1.0 \end{bmatrix}$$

$$[b] = [Z_{abc}] = \begin{bmatrix} 0.8667 + j2.0417 & 0.2955 + j0.9502 & 0.2907 + j0.7290 \\ 0.2955 + j0.9502 & 0.8837 + j1.9852 & 0.2992 + j0.8023 \\ 0.2907 + j0.7290 & 0.2992 + j0.8023 & 0.8741 + j2.0172 \end{bmatrix}$$

$$[c] = \begin{bmatrix} 0 & 0 & 0 \\ 0 & 0 & 0 \\ 0 & 0 & 0 \end{bmatrix}$$

$$[d] = \begin{bmatrix} 1.0 & 0 & 0 \\ 0 & 1.0 & 0 \\ 0 & 0 & 1.0 \end{bmatrix}$$

$$[A] = \begin{bmatrix} 1.0 & 0 & 0 \\ 0 & 1.0 & 0 \\ 0 & 0 & 1.0 \end{bmatrix}$$

$$[B] = [a]^{-1} \cdot [b] = \begin{bmatrix} 0.8667 + j2.0417 & 0.2955 + j0.9502 & 0.2907 + j0.7290 \\ 0.2955 + j0.9502 & 0.8837 + j1.9852 & 0.2992 + j0.8023 \\ 0.2907 + j0.7290 & 0.2992 + j0.8023 & 0.8741 + j2.0172 \end{bmatrix}$$

Because the elements of the phase admittance matrix are so small, the [*a*], [*A*], and [*d*] matrices appear to be the unity matrix. If more significant figures are displayed, the 1,1 element of these matrices is

$$a_{1,1} = A_{1,1} = 0.99999117 + j0.00000395$$

Also, the elements of the [*c*] matrix appear to be zero. Again if more significant figures are displayed, the 1,1 term is

$$c_{1,1} = -0.0000044134 + j0.0000127144$$

The point here is that for all practical purposes the phase admittance matrix can be neglected.

The magnitude of the line-to-ground voltage at the load is

$$VLG = \frac{12470}{\sqrt{3}} = 7199.56$$

Selecting the phase *a* to ground voltage as reference, the line-to-ground voltage matrix at the load is

$$\begin{bmatrix} V_{ag} \\ V_{bg} \\ V_{cg} \end{bmatrix}_m = \begin{bmatrix} 7199.56\underline{/0} \\ 7199.56\underline{/-120} \\ 7199.56\underline{/120} \end{bmatrix} \text{V}$$

The magnitude of the load currents is

$$|I|_m = \frac{6000}{\sqrt{3} \cdot 12.47} = 277.79$$

For a 0.9 lagging power factor the load current matrix is

$$[I_{abc}]_m = \begin{bmatrix} 277.79/\underline{-25.84} \\ 277.79/\underline{-145.84} \\ 277.79/\underline{94.16} \end{bmatrix} \text{A}$$

The line-to-ground voltages at node n are computed to be

$$[VLG_{abc}]_n = [a] \cdot [VLG_{abc}]_m + [b] \cdot [I_{abc}]_m = \begin{bmatrix} 7538.70/\underline{1.57} \\ 7451.25/\underline{-118.30} \\ 7485.11/\underline{121.93} \end{bmatrix} \text{V}$$

It is important to note that the voltages at node n are unbalanced even though the voltages and currents at the load (node m) are perfectly balanced. This is a result of the unequal mutual coupling between phases. The degree of voltage unbalance is of concern since, for example, the operating characteristics of a three-phase induction motor are very sensitive to voltage unbalance. Using the NEMA definition for voltage unbalance (Equation 6.29), the voltage unbalance is given by

$$|V_{average}| = \frac{|V_{ag}|_n + |V_{bg}|_n + |V_{cg}|_n}{3} = \frac{7538.70 + 7451.25 + 7485.11}{3} = 7491.69$$

$$Vdeviation_{max} = 7538.70 - 7491.69 = 47.01$$

$$V_{unbalance} = \frac{47.01}{7491.70} \cdot 100\% = 0.6275\%$$

Although this may not seem like a large unbalance, it does give an indication of how the unequal mutual coupling can generate an unbalance. It is important to know that NEMA standards require that induction motors be derated when the voltage unbalance exceeds 1.0%.

Selecting rated line-to-ground voltage as base (7199.56) the per-unit voltages at bus n are

$$\begin{bmatrix} V_{ag} \\ V_{bg} \\ V_{cg} \end{bmatrix}_n = \frac{1}{7199.56} \begin{bmatrix} 7538.70/\underline{1.577} \\ 7451.25/\underline{-118.30} \\ 7485.11/\underline{121.93} \end{bmatrix} = \begin{bmatrix} 1.0471/\underline{1.57} \\ 1.0350/\underline{-118.30} \\ 1.0397/\underline{-121.931} \end{bmatrix} \text{per unit}$$

By converting the voltages to per unit, it is easy to see that the voltage drop by phase is 4.71% for phase a, 3.50% for phase b, and 3.97% for phase c.

The line currents at node n are computed to be

$$[I_{abc}]_n = [c] \cdot [VLG_{abc}]_m + [d] \cdot [I_{abc}]_m = \begin{bmatrix} 277.71/\underline{-25.83} \\ 277.73/\underline{-148.82} \\ 277.73/\underline{94.17} \end{bmatrix} \text{A}$$

Comparing the computed line currents at node n to the balanced load currents at node m, a very slight difference is noted that is another result of the unbalanced voltages at node n and the shunt admittance of the line segment.

Modified Line Model :

Figure 6.2 shows the modified line segment model with the shunt admittance neglected. When the shunt admittance is neglected, the generalized matrices become

When the shunt admittance is neglected, the generalized matrices become

$$[a] = [U] \tag{6.32}$$

$$[b] = [Z_{abc}] \tag{6.33}$$

$$[c] = [0] \tag{6.34}$$

$$[d] = [U] \tag{6.35}$$

$$[A] = [U] \tag{6.36}$$

$$[B] = [Z_{abc}] \tag{6.37}$$

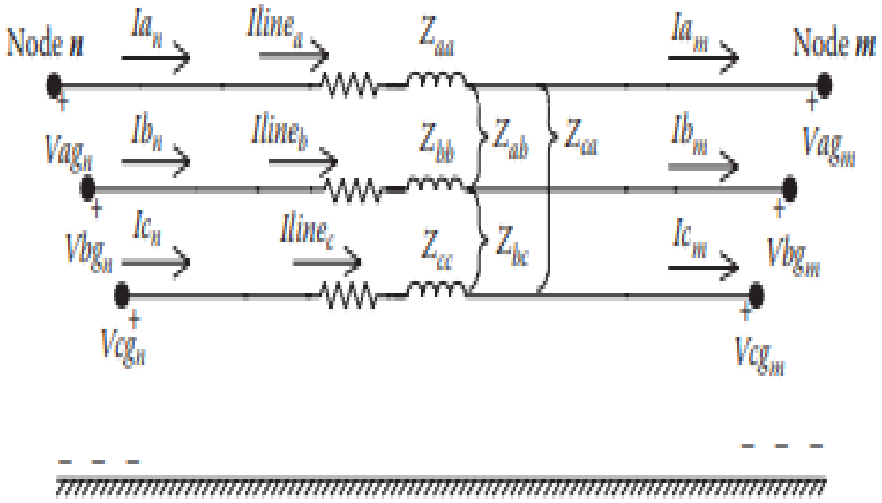

FIGURE 6.2
Modified line segment model.

a) Three-Wire Delta Line :

If the line is a three-wire delta, then the voltage drops down the line must be in terms of the line-to-line voltages and line currents. However, it is possible to use "equivalent" line-to-neutral voltages so that the equations derived to this point will still apply. Writing the voltage drops in terms of line-to-line voltages for the line in Figure 6.2 results in

$$\begin{bmatrix} V_{ab} \\ V_{bc} \\ V_{ca} \end{bmatrix}_n = \begin{bmatrix} V_{ab} \\ V_{bc} \\ V_{ca} \end{bmatrix}_m + \begin{bmatrix} vdrop_a \\ vdrop_b \\ vdrop_c \end{bmatrix} - \begin{bmatrix} vdrop_b \\ vdrop_c \\ vdrop_a \end{bmatrix} \tag{6.38}$$

where

$$\begin{bmatrix} vdrop_a \\ vdrop_b \\ vdrop_c \end{bmatrix} = \begin{bmatrix} Z_{aa} & Z_{ab} & Z_{ac} \\ Z_{ba} & Z_{bb} & Z_{bc} \\ Z_{ca} & Z_{cb} & Z_{cc} \end{bmatrix} \cdot \begin{bmatrix} Iline_a \\ Iline_b \\ Iline_c \end{bmatrix} \tag{6.39}$$

Expanding Equation 6.38 for the phase a–b,

$$Vab_n = Vab_m + vdrop_a - vdrop_b \tag{6.40}$$

but

$$\begin{aligned} Vab_n &= Van_n - Vbn_n \\ Vab_m &= Van_m - Vbn_m \end{aligned} \tag{6.41}$$

Substitute Equations 6.41 into Equation 6.40:

$$Van_n - Vbn_n = Van_m - Vbn_m + vdrop_a - vdrop_b \tag{6.42}$$

Equation 6.40 can be broken into two parts in terms of "equivalent" line-to-neutral voltages:

$$\begin{aligned} Van_n &= Van_m + vdrop_a \\ Vbn_n &= Vbn_m + vdrop_b \end{aligned} \tag{6.43}$$

The conclusion here is that it is possible to work with "equivalent" line-to-neutral voltages in a three-wire delta line. This is very important since it makes the development of general analyses techniques the same for four-wire wye and three-wire delta systems.

b) Computation of Neutral and Ground Currents :

the Kron reduction method was used to reduce the primitive impedance matrix to the 3 × 3 phase impedance matrix. Figure 6.3 shows a three-phase line with grounded neutral that is used in the Kron reduction. Note that the direction of the current flowing in the ground is shown in Figure 6.3

In the development of the Kron reduction method, Equation 4.52 defined the "neutral transform matrix" $[t_n]$. The same equation is shown as Equation 6.44:

$$[t_n] = -[\hat{z}_{nn}]^{-1} \cdot [\hat{z}_{nj}] \tag{6.44}$$

The matrices $[\hat{z}_{nn}]$ and $[\hat{z}_{nj}]$ are the partitioned matrices in the primitive impedance matrix.

When the currents flowing in the lines have been determined, Equation 6.45 is used to compute the current flowing in the grounded neutral wire(s):

$$[I_n] = [t_n] \cdot [I_{abc}] \tag{6.45}$$

In Equation 6.45, the matrix $[I_n]$ for an overhead line with one neutral wire will be a single element. However, in the case of an underground line consisting of concentric neutral cables or taped shielded cables with or without a separate neutral wire, $[I_n]$ will be the currents flowing in each of the cable neutrals and the separate neutral wire if present. Once the neutral current(s) has been determined, Kirchhoff's current law is used to compute the current flowing in ground:

$$I_g = -(I_a + I_b + I_c + In_1 + In_2 + \cdots + In_k) \tag{6.46}$$

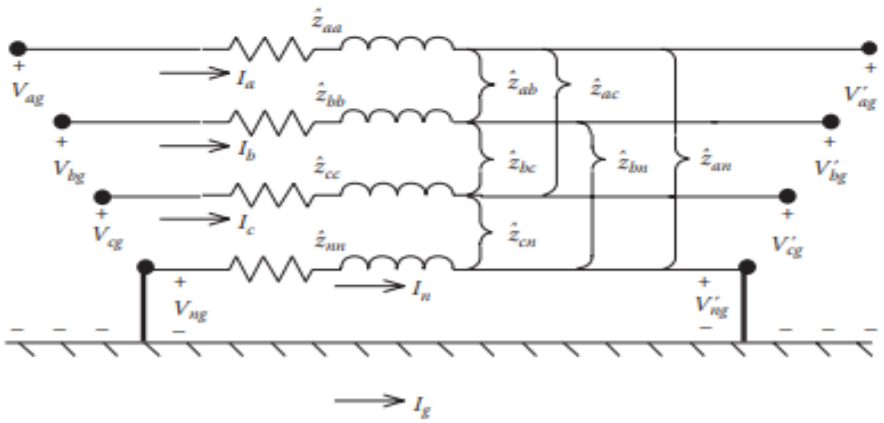

FIGURE 6.3
Three-phase line with neutral and ground currents.

Example 6.2

The line of Example 6.1 will be used to supply an unbalanced load at node *m*. Assume that the voltages at the source end (node *n*) are balanced three phase at 12.47 kV line to line. The balanced line-to-ground voltages are

$$[VLG_{abc}]_n = \begin{bmatrix} 7199.56\underline{/0} \\ 7199.56\underline{/-120} \\ 7199.56\underline{/120} \end{bmatrix} \text{V}$$

The unbalanced currents measured at the source end are given by

$$\begin{bmatrix} I_a \\ I_b \\ I_c \end{bmatrix}_n = \begin{bmatrix} 249.97\underline{/-24.5} \\ 277.56\underline{/-145.8} \\ 305.54\underline{/95.2} \end{bmatrix} \text{A}$$

Determine

- The line-to-ground and line-to-line voltages at the load end (node *m*) using the modified line model
- The voltage unbalance
- The complex powers of the load
- The currents flowing in the neutral wire and ground

Solution

The [*A*] and [*B*] matrices for the modified line model are

$$[A] = [U] = \begin{bmatrix} 1 & 0 & 0 \\ 0 & 1 & 0 \\ 0 & 0 & 1 \end{bmatrix}$$

$$[B] = [Z_{abc}] = \begin{bmatrix} 0.8666 + j2.0417 & 0.2955 + j0.9502 & 0.2907 + j0.7290 \\ 0.2955 + j0.9502 & 0.8837 + j1.9852 & 0.2992 + j0.8023 \\ 0.2907 + j0.7290 & 0.2992 + j0.8023 & 0.8741 + j2.0172 \end{bmatrix} \Omega$$

Since this is the approximate model, $[I_{abc}]_m$ is equal to $[I_{abc}]_n$. Therefore

$$\begin{bmatrix} I_a \\ I_b \\ I_c \end{bmatrix}_m = \begin{bmatrix} 249.97\underline{/-24.5} \\ 277.56\underline{/-145.8} \\ 305.54\underline{/95.2} \end{bmatrix} \text{A}$$

The line-to-ground voltages at the load end are

$$[VLG_{abc}]_m = [A] \cdot [VLG_{abc}]_n - [B] \cdot [I_{abc}]_m = \begin{bmatrix} 6942.53\underline{/-1.47} \\ 6918.35\underline{/-121.55} \\ 6887.71\underline{/117.31} \end{bmatrix} \text{V}$$

The line-to-line voltages at the load end are

$$[D]=\begin{bmatrix}1 & -1 & 0\\ 0 & 1 & -1\\ -1 & 0 & 1\end{bmatrix}$$

$$\left[VLL_{abc}\right]_m=[D]\cdot\left[VLG_{abc}\right]_m=\begin{bmatrix}12{,}008\underline{/28.4}\\ 12{,}025\underline{/-92.2}\\ 11{,}903\underline{/148.1}\end{bmatrix}$$

For this condition, the average load voltage is

$$\left|V_{average}\right|=\frac{6942.53+6918.35+6887.71}{3}=6916.20$$

The maximum deviation from the average is on phase c so that

$$Vdeviation_{max}=\left|6887.71-6916.20\right|=28.49$$

$$V_{unbalance}=\frac{28.49}{6916.20}\cdot 100=0.4119\%$$

The complex powers of the load are

$$\begin{bmatrix}S_a\\ S_b\\ S_c\end{bmatrix}=\frac{1}{1000}\cdot\begin{bmatrix}V_{ag}\cdot I_a^*\\ V_{bg}\cdot I_b^*\\ V_{cg}\cdot I_c^*\end{bmatrix}=\begin{bmatrix}1597.2+j678.8\\ 1750.8+j788.7\\ 1949.7+j792.0\end{bmatrix}\text{kW}+j\text{kvar}$$

The "neutral transformation matrix" from Example 4.1 is

$$[t_n]=\begin{bmatrix}-0.4292-j0.1291 & -0.4476-j0.1373 & -0.4373-j0.1327\end{bmatrix}$$

The neutral current is

$$[I_n]=[t_n]\cdot\left[I_{abc}\right]_m=26.2\underline{/-29.5}$$

The ground current is

$$I_g=-(I_a+I_b+I_c+I_n)=32.5\underline{/-77.6}$$

Approximate Line Segment Model :

Many times the only data available for a line segment will be the positive and zero sequence impedances. The approximate line model can be developed by applying the "reverse impedance transformation" from symmetrical component theory

Using the known positive and zero sequence impedances, the "sequence impedance matrix" is given by

$$[Z_{seq}] = \begin{bmatrix} Z_0 & 0 & 0 \\ 0 & Z_+ & 0 \\ 0 & 0 & Z_+ \end{bmatrix} \tag{6.47}$$

The "reverse impedance transformation" results in the following approximate phase impedance matrix:

$$[Z_{approx}] = [A_s] \cdot [Z_{seq}] \cdot [A_s]^{-1} \tag{6.48}$$

$$[Z_{approx}] = \frac{1}{3} \cdot \begin{bmatrix} (2 \cdot Z_+ + Z_0) & (Z_0 - Z_+) & (Z_0 - Z_+) \\ (Z_0 - Z_+) & (2 \cdot Z_+ + Z_0) & (Z_0 - Z_+) \\ (Z_0 - Z_+) & (Z_0 - Z_+) & (2 \cdot Z_+ + Z_0) \end{bmatrix} \tag{6.49}$$

Notice that the approximate impedance matrix is characterized by the three diagonal terms being equal and all mutual terms being equal. This is the same result that is achieved if the line is assumed to be transposed. Applying the approximate impedance matrix the voltage at node ***n*** is computed to be

$$\begin{bmatrix} V_{ag} \\ V_{bg} \\ V_{cg} \end{bmatrix}_n = \begin{bmatrix} V_{ag} \\ V_{bg} \\ V_{cg} \end{bmatrix}_m + \frac{1}{3} \cdot \begin{bmatrix} (2 \cdot Z_+ + Z_0) & (Z_0 - Z_+) & (Z_0 - Z_+) \\ (Z_0 - Z_+) & (2 \cdot Z_+ + Z_0) & (Z_0 - Z_+) \\ (Z_0 - Z_+) & (Z_0 - Z_+) & (2 \cdot Z_+ + Z_0) \end{bmatrix} \cdot \begin{bmatrix} I_a \\ I_b \\ I_c \end{bmatrix}_m \tag{6.50}$$

In condensed form, Equation 6.50 becomes

$$[VLG_{abc}]_n = [VLG_{abc}]_m + [Z_{approx}] \cdot [I_{abc}]_m \tag{6.51}$$

Note that Equation 6.51 is of the form

$$[VLG_{abc}]_n = [a][VLG_{abc}]_m + [b] \cdot [I_{abc}]_m \tag{6.52}$$

where

$$[A] = \text{unity matrix}$$

$$[b] = [Z_{approx}]$$

Equation 6.50 can be expanded and an equivalent circuit for the approximate line segment model can be developed. Solving Equation 6.50 for the phase *a* voltage at node ***n*** results in

$$Vag_n = Vag_m + \frac{1}{3}\{(2Z_+ + Z_0)I_a + (Z_0 - Z_+)I_b + (Z_0 + Z_+)I_c\} \tag{6.53}$$

Modify Equation 6.53 by adding and subtracting the term $(Z_0 - Z_+)I_a$ and then combining terms and simplifying:

$$\begin{aligned} Vag_n &= Vag_m + \frac{1}{3}\begin{Bmatrix}(2Z_+ + Z_0)I_a + (Z_0 - Z_+)I_b + (Z_0 - Z_+)I_c \\ +(Z_0 - Z_+)I_a - (Z_0 - Z_+)I_a\end{Bmatrix} \\ &= Vag_m + \frac{1}{3}\{(3Z_+)I_a + (Z_0 - Z_+)(I_a + I_b + I_c)\} \\ &= Vag_m + Z_+ \cdot I_a + \frac{(Z_0 - Z_+)}{3}\cdot(I_a + I_b + I_c) \end{aligned} \tag{6.54}$$

The same process can be followed in expanding Equation 6.50 for phases *b* and *c*. The final results are

$$Vbg_n = Vbg_m + Z_+ \cdot I_b + \frac{(Z_0 - Z_+)}{3}\cdot(I_a + I_b + I_c) \tag{6.55}$$

$$Vcg_n = Vcg_m + Z_+ \cdot I_c + \frac{(Z_0 - Z_+)}{3}\cdot(I_a + I_b + I_c) \tag{6.56}$$

Figure 6.4 illustrates the approximate line segment model.

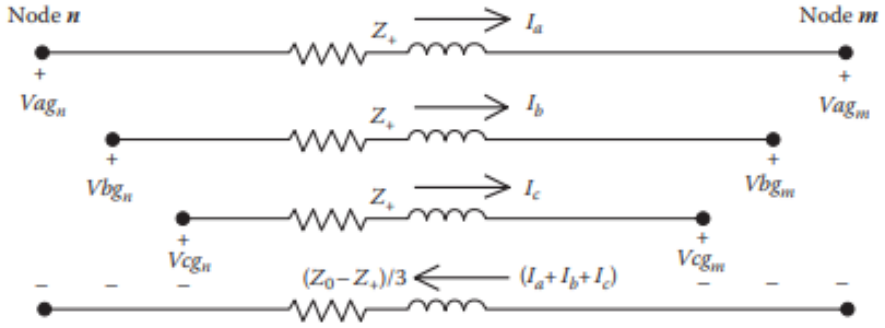

FIGURE 6.4
Approximate line segment model.

Figure 6.4 shows a simple equivalent circuit for the line segment since no mutual coupling has to be modeled. It must be understood, however, that the equivalent circuit can only be used when transposition of the line segment has been assumed.

Example 6.3

The line segment of Example 4.1 is to be analyzed assuming that the line has been transposed. In Example 4.1, the positive and zero sequence impedances were computed to be

$$\begin{matrix} z_+ = 0.3061 + j0.6270 \\ z_0 = 0.7735 + j1.9373 \end{matrix} \Omega/\text{mile}$$

Assume that the load at node m is the same as in Example 6.1. That is,

$$kVA = 6000, \quad kVLL = 12.47, \quad Power\ Factor = 0.8 \text{ lagging}$$

Determine the voltages and currents at the source end (node n) for this loading condition.

Solution

The sequence impedance matrix is

$$[z_{seq}] = \begin{bmatrix} 0.7735 + j1.9373 & 0 & 0 \\ 0 & 0.3061 + j0.6270 & 0 \\ 0 & 0 & 0.3061 + j0.6270 \end{bmatrix} \Omega/\text{mile}$$

Performing the reverse impedance transformation results in the approximate phase impedance matrix:

$$[z_{approx}] = [A_s] \cdot [z_{seq}] \cdot [A_s]^{-1}$$

$$= \begin{bmatrix} 0.4619 + j1.0638 & 0.1558 + j0.4368 & 0.1558 + j0.4368 \\ 0.1558 + j0.4368 & 0.4619 + j1.0638 & 0.1558 + j0.4368 \\ 0.1558 + j0.4368 & 0.1558 + j0.4368 & 0.4619 + j1.0638 \end{bmatrix} \Omega/\text{mile}$$

For the 10,000 ft line, the phase impedance matrix and the $[b]$ matrix are

$$[b] = [Z_{approx}] = [z_{approx}] \cdot \frac{10000}{5280}$$

$$= \begin{bmatrix} 0.8748 + j2.0147 & 0.2951 + j0.8272 & 0.2951 + j0.8272 \\ 0.2951 + j0.8272 & 0.8748 + j2.0147 & 0.2951 + j0.8272 \\ 0.2951 + j0.8272 & 0.2951 + j0.8272 & 0.8748 + j2.0147 \end{bmatrix} \Omega$$

Note in the approximate phase impedance matrix that the three diagonal terms are equal and all of the mutual terms are equal. Again, this is an indication of the transposition assumption.

From Example 6.1, the voltages and currents at node ***m*** are

$$[VLG_{abc}]_m = \begin{bmatrix} 7199.56\underline{/0} \\ 7199.56\underline{/-120} \\ 7199.56\underline{/120} \end{bmatrix} \text{V}$$

$$[I_{abc}]_m = \begin{bmatrix} 277.79\underline{/-25.84} \\ 277.79\underline{/-145.84} \\ 277.79\underline{/94.16} \end{bmatrix} \text{A}$$

Using Equation 6.52,

$$[VLG_{abc}]_n = [a]\cdot[VLG_{abc}]_m + [b]\cdot[I_{abc}]_m = \begin{bmatrix} 7491.72\underline{/-1.73} \\ 7491.72\underline{/-118.27} \\ 7491.72\underline{/121.73} \end{bmatrix} \text{V}$$

Note that the computed voltages are balanced. In Example 6.1, it was shown that when the line is modeled accurately, there is a voltage unbalance of 0.6275%. It should also be noted that the average value of the voltages at node ***n*** in Example 6.1 was 7491.69 V.

The V_{ag} at node ***n*** can also be computed using Equation 6.48:

$$Vag_n = Vag_m + Z_+ \cdot I_a + \frac{(Z_0 - Z_+)}{3}\cdot(I_a + I_b + I_c)$$

Since the currents are balanced, this equation reduces to

$$Vag_n = Vag_m + Z_+ \cdot I_a$$
$$= 7199.56\underline{/0} + (0.5797 + j1.1875)\cdot 277.79\underline{/-25.84} = 7491.72\underline{/1.73}\,\text{V}$$

It can be noted that when the loads are balanced and transposition has been assumed, the three-phase line can be analyzed as a simple single-phase equivalent as was done in the calculation earlier.

Example 6.4

Use the balanced voltages and unbalanced currents at node ***n*** in Example 6.2 and the approximate line model to compute the voltages and currents at node ***m***.

Solution

From Example 6.2, the voltages and currents at node ***n*** are given as

$$[VLG_{abc}]_n = \begin{bmatrix} 7199.56\underline{/0} \\ 7199.56\underline{/-120} \\ 7199.56\underline{/120} \end{bmatrix} \text{V}$$

$$\begin{bmatrix} I_a \\ I_b \\ I_c \end{bmatrix}_n = \begin{bmatrix} 249.97\underline{/-24.5} \\ 277.56\underline{/-145.8} \\ 305.54\underline{/95.2} \end{bmatrix} \text{A}$$

The [*A*] and [*B*] matrices for the approximate line model are

$$[A] = \text{unity matrix}$$

$$[B] = [Z_{approx}]$$

The voltages at node *m* are determined by

$$[VLG_{abc}]_m = [A] \cdot [VLG_{abc}]_n - [B] \cdot [I_{abc}]_n = \begin{bmatrix} 6993.10\underline{/-1.63} \\ 6881.15\underline{/-121.61} \\ 6880.23\underline{/117.50} \end{bmatrix} \text{V}$$

The voltage unbalance for this case is computed by

$$V_{average} = \frac{6993.10 + 6881.15 + 6880.23}{3} = 6918.16$$

$$Vdeviation_{max} = |6993.12 - 6918.17| = 74.94$$

$$V_{unbalance} = \frac{74.94}{6918.17} \cdot 100 = 1.0833\%$$

Note that the approximate model has led to a higher voltage unbalance than the "exact" model.

Voltage Regulation :

The regulation of voltages is an important function on a distribution feeder. As the loads on the feeders vary, there must be some means of regulating the voltage so that every customer's voltage remains within an acceptable level. Common methods of regulating the voltage are the application of step type voltage regulators, load tap changing (LTC) transformers, and shunt capacitors.

Standard Voltage Ratings :

The American National Standards Institute (ANSI) standard ANSI C84.1-1995 for "Electric Power Systems and Equipment Voltage Ratings (60 Hertz)" provides the following definitions for system voltage terms [1]:

- *System voltage*: The root mean square (rms) phasor voltage of a portion of an alternating current electric system. Each system voltage pertains to a portion of the system that is bounded by transformers or utilization equipment.
- *Nominal system voltage*: The voltage by which a portion of the system is designated and to which certain operating characteristics of the system are related. Each nominal system voltage pertains to a portion of the system bounded by transformers or utilization equipment.
- *Maximum system voltage*: The highest system voltage that occurs under normal operating conditions, and the highest system voltage for which equipment and other components are designed for satisfactory continuous operation without derating of any kind.
- *Service voltage*: The voltage at the point where the electrical system of the supplier and the electrical system of the user are connected.
- *Utilization voltage*: The voltage at the line terminals of utilization equipment.
- *Nominal utilization voltage*: The voltage rating of certain utilization equipment used on the system.

The ANSI standard specifies two voltage ranges. An over simplification of the voltage ranges is

- *Range A*: Electric supply systems shall be so designated and operated such that most service voltages will be within the limits specified for range A. The occurrence of voltages outside of these limits should be infrequent.
- *Range B*: Voltages above and below range A. When these voltages occur, corrective measures shall be undertaken within a reasonable time to improve voltages to meet range A.

For a normal three-wire 120/240 V service to a user, the range A and range B voltages are

- Range A
  - Nominal utilization voltage = 115 V
  - Maximum utilization and service voltage = 126 V
  - Minimum service voltage = 114 V
  - Minimum utilization voltage = 110 V
- Range B
  - Nominal utilization voltage = 115 V
  - Maximum utilization and service voltage = 127 V
  - Minimum service voltage = 110 V
  - Minimum utilization voltage = 107 V

These ANSI standards give the distribution engineer a range of "normal steady-state" voltages (range A) and a range of "emergency steady-state" voltages (range B) that must be supplied to all users.

In addition to the acceptable voltage magnitude ranges, the ANSI standard recommends that the "electric supply systems should be designed and operated to limit the maximum voltage unbalance to 3 percent when measured at the electric-utility revenue meter under a no-load condition." Voltage unbalance is defined as

$$Voltage_{unbalance} = \frac{Max.\ deviation\ \ from\ average\ voltage}{Average\ voltage} \cdot 100\% \qquad (7.1)$$

The task for the distribution engineer is to design and operate the distribution system so that under normal steady-state conditions the voltages at the meters of all users will lie within Range *A* and that the voltage unbalance will not exceed 3%.

A common device used to maintain system voltages is the step-voltage regulator. Step-voltage regulators can be single phase or three phase. Single-phase

---

regulators can be connected in wye, delta, or open delta, in addition to operating as a single-phase device. The regulators and their controls allow the voltage output to vary as the load varies.

A step-voltage regulator is basically an autotransformer with a LTC mechanism on the "series" winding. The voltage change is obtained by changing the number of turns (tap changes) of the series winding of the autotransformer.

An autotransformer can be visualized as a two-winding transformer with a solid connection between a terminal on the primary side of the transformer and a terminal on the secondary. Before proceeding to the autotransformer, a review of two-transformer theory and the development of generalized constants will be presented.

Step-Voltage Regulators :

A step-voltage regulator consists of an autotransformer and a LTC mechanism. The voltage change is obtained by changing the taps of the series winding of the autotransformer. The position of the tap is determined by

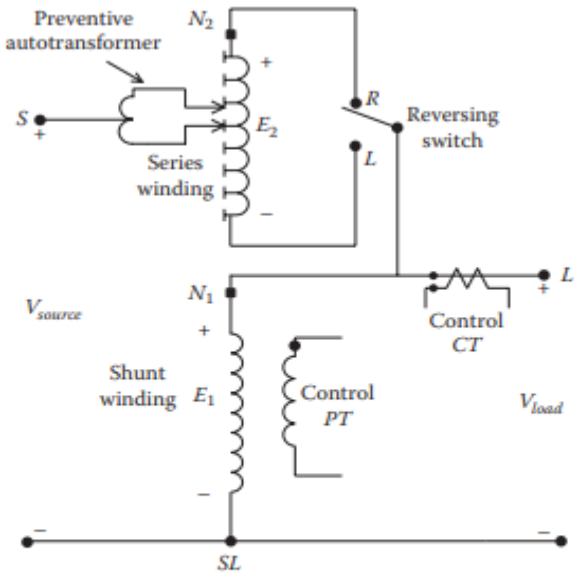

FIGURE 7.5
Type "B" step-voltage regulator.

a control circuit (line drop compensator). Standard step-regulators contain a reversing switch enabling a ±10% regulator range, usually in 32 steps. This amounts to a 5/8% change per step or 0.75 V change per step on a 120 V base. Step-regulators can be connected in a "Type A" or "Type B" connection according to the ANSI/IEEE C57.15-1986 standard [2]. The more common Type B connection is shown in Figure 7.5.

The step-voltage regulator control circuit is shown in block form in Figure 7.6. The step-voltage regulator control circuit requires the following settings:

1. *Voltage level*: The desired voltage (on 120 V base) to be held at the "load center." The load center may be the output terminal of the regulator or a remote node on the feeder.
2. *Bandwidth*: The allowed variance of the load center voltage from the set voltage level. The voltage held at the load center will be ±1/2 of

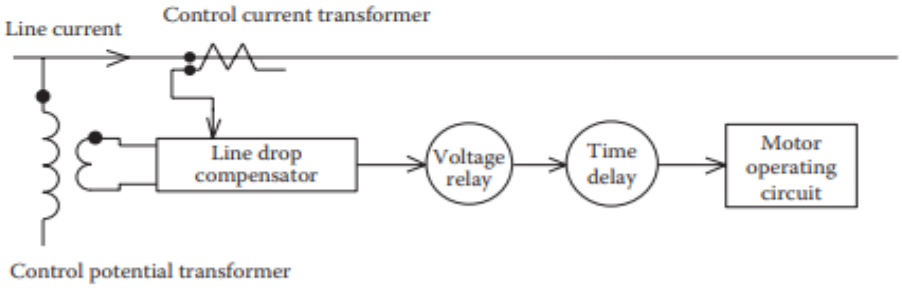

FIGURE 7.6
Step-voltage regulator control circuit.

the bandwidth. For example, if the voltage level is set to 122 V and the bandwidth set to 2 V, the regulator will change taps until the load center voltage lies between 121 and 123 V.

3. *Time delay*: Length of time that a raise or lower operation is called for before the actual execution of the command. This prevents taps changing during a transient or short time change in current.
4. *Line drop compensator*: Set to compensate for the voltage drop (line drop) between the regulator and the load center. The settings consist of R and X settings in volts corresponding to the *equivalent* impedance between the regulator and the load center. This setting may be zero if the regulator output terminals are the "load center."

The required rating of a step-regulator is based upon the kVA transformed and not the kVA rating of the line. In general, this will be 10% of the line rating since rated current flows through the series winding, which represents the ±10% voltage change. The kVA rating of the step-voltage regulator is determined in the same manner as that of the previously discussed autotransformer.

---

a) Single-Phase Step-Voltage Regulators :

Because the series impedance and shunt admittance values of step-voltage regulators are so small, they will be neglected in the following equivalent circuits. It should be pointed out, however, that if it is desired to include the impedance and admittance, they can be incorporated into the following equivalent circuits in the same way they were originally modeled in the autotransformer equivalent circuit.

1) Type A Step-Voltage Regulator :

The detailed equivalent circuit and abbreviated equivalent circuit of a Type A step-voltage regulator in the "raise" position are shown in Figure 7.7.

As shown in Figure 7.7, the primary circuit of the system is connected directly to the shunt winding of the Type A regulator. The series winding is connected to the shunt winding and, in turn, via taps, to the regulated circuit. In this connection, the core excitation varies because the shunt winding is connected directly across primary circuit.

When the Type A connection is in the "lower" position, the reversing switch is connected to the "L" terminal. The effect of this reversal is to reverse the direction of the currents in the series and shunt windings. Figure 7.8 shows the equivalent circuit and abbreviated circuit of the Type A regulator in the lower position.

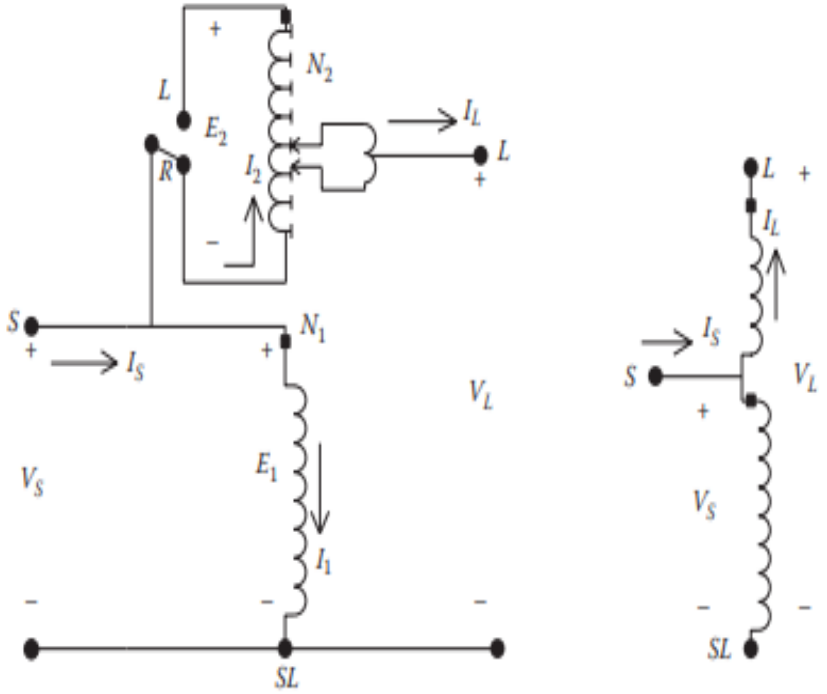

FIGURE 7.7
Type A step-voltage regulator in the raise position.

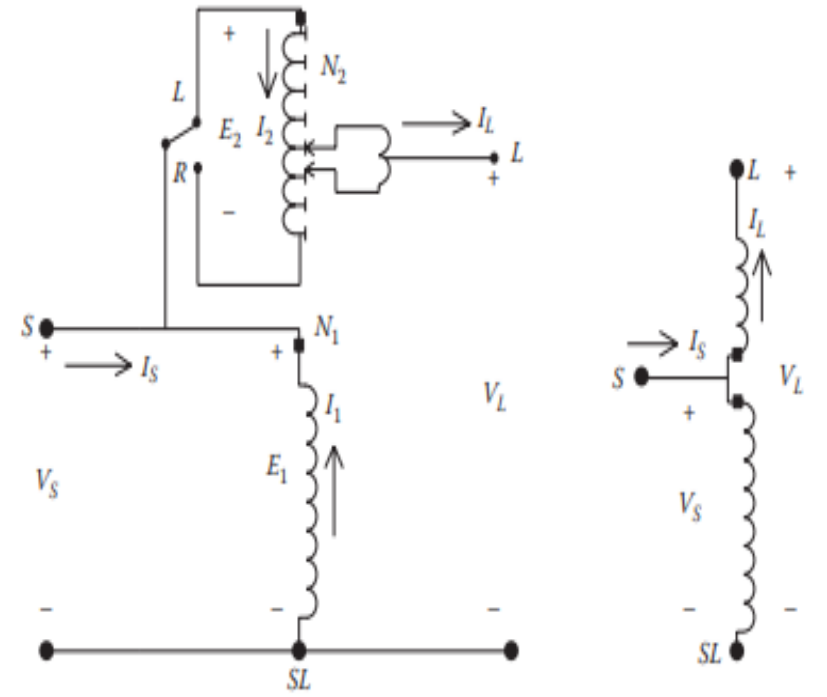

FIGURE 7.8
Type A step-voltage regulator in the lower position.

ii) Type B Step-Voltage Regulator :

The more common connection for step-voltage regulators is the Type B. Since this is the more common connection, the defining voltage and current equations for the voltage regulator will be developed only for the Type B connection. The detailed and abbreviated equivalent circuits of a Type B step-voltage regulator in the "raise" position are shown in Figure 7.9

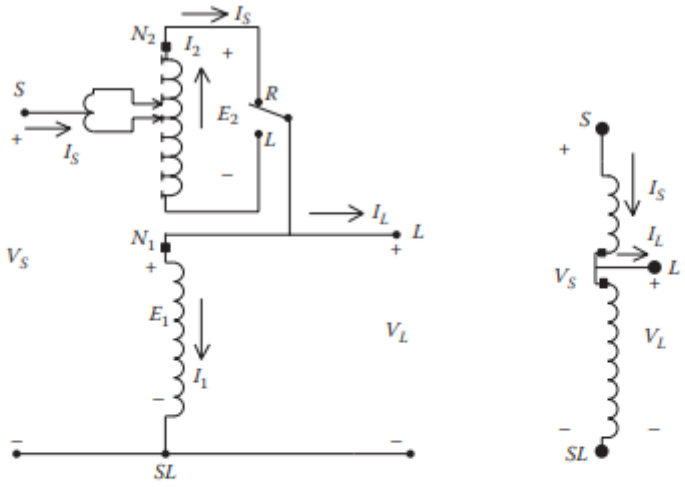

FIGURE 7.9
Type B step-voltage regulator in the raise position.

The primary circuit of the system is connected, via taps, to the series winding of the regulator in the Type B connection. The series winding is connected to the shunt winding, which is connected directly to the regulated circuit. In a Type B regulator, the core excitation is constant because the shunt winding is connected across the regulated circuit.

The defining voltage and current equations for the regulator in the raise position are as follows:

Voltage Equations	Current Equations	
$\frac{E_1}{N_1} = \frac{E_2}{N_2}$	$N_1 \cdot I_1 = N_2 \cdot I_2$	(7.61)
$V_S = E_1 - E_2$	$I_L = I_S - I_1$	(7.62)
$V_L = E_1$	$I_2 = I_S$	(7.63)
$E_2 = \frac{N_2}{N_1} \cdot E_1 = \frac{N_2}{N_1} \cdot V_L$	$I_1 = \frac{N_2}{N_1} \cdot I_2 = \frac{N_2}{N_1} \cdot I_S$	(7.64)
$V_S = \left(1 - \frac{N_2}{N_1}\right) \cdot V_L$	$I_L = \left(1 - \frac{N_2}{N_1}\right) \cdot I_S$	(7.65)
$V_S = a_R \cdot V_L$	$I_L = a_R \cdot I_S$	(7.66)
$a_R = 1 - \frac{N_2}{N_1}$		(7.67)

Equations 7.66 and 7.67 are the necessary defining equations for modeling a Type B regulator in the raise position.

The Type B step-voltage connection in the "lower" position is shown in Figure 7.10. As in the Type A connection, note that the direction of the

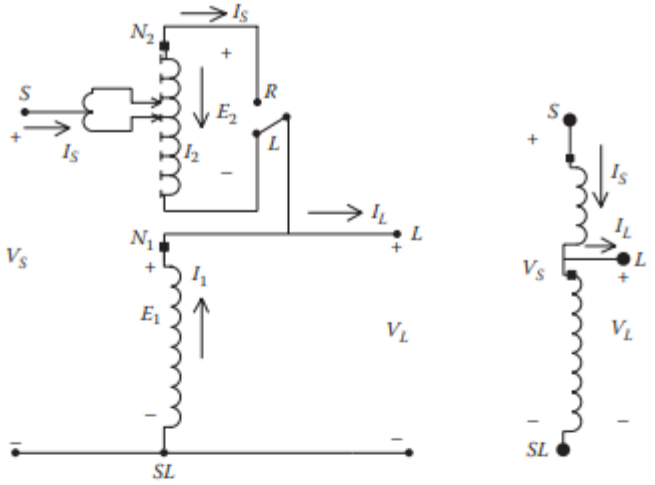

FIGURE 7.10
Type B step-voltage regulator in the lower position.

currents through the series and shunt windings change, but the voltage polarity of the two windings remain the same.

The defining voltage and current equations for the Type B step-voltage regulator in the lower position are as follows:

Voltage Equations	Current Equations	
$\frac{E_1}{N_1} = \frac{E_2}{N_2}$	$N_1 \cdot I_1 = N_2 \cdot I_2$	(7.68)
$V_S = E_1 + E_2$	$I_L = I_S - I_1$	(7.69)
$V_L = E_1$	$I_2 = -I_S$	(7.70)
$E_2 = \frac{N_2}{N_1} \cdot E_1 = \frac{N_2}{N_1} \cdot V_L$	$I_1 = \frac{N_2}{N_1} \cdot I_2 = \frac{N_2}{N_1} \cdot (-I_S)$	(7.71)
$V_S = \left(1 + \frac{N_2}{N_1}\right) \cdot V_L$	$I_L = \left(1 + \frac{N_2}{N_1}\right) \cdot I_S$	(7.72)
$V_S = a_R \cdot V_L$	$I_L = a_R \cdot I_S$	(7.73)
$a_R = 1 + \frac{N_2}{N_1}$		(7.74)

Equations 7.67 and 7.74 give the value of the effective regulator ratio as a function of the ratio of the number of turns on the series winding (N_2) to the number of turns on the shunt winding (N_1).

In the final analysis, the only difference between the voltage and current equations for the Type B regulator in the raise and lower positions is the sign of the turns ratio (N_2/N_1). The actual turns ratio of the windings is not known.

However, the particular tap position will be known. Equations 7.67 and 7.74 can be modified to give the effective regulator ratio as a function of the tap position. Each tap changes the voltage by 5/8% or 0.00625 per unit. Therefore, the effective regulator ratio can be given by

$$a_R = 1 \pm 0.00625 \cdot Tap \tag{7.75}$$

In Equation 7.75, the minus sign applies for the "raise" position and the positive sign for the "lower" position.

iii) Generalized Constants :

generalized a, b, c, and d constants have been developed for various devices. It can now be shown that the generalized a, b, c, and d constants can also be applied to the step-voltage regulator. For both Type A and Type B regulators, the relationship between the source voltage and current to the load voltage and current is of the form:

Type A

$$V_S = \frac{1}{a_R} \cdot V_L \quad I_S = a_R \cdot I_L \tag{7.76}$$

Type B

$$V_S = a_R \cdot V_L \quad I_S = \frac{1}{a_R} \cdot I_L \tag{7.77}$$

Therefore, the generalized constants for a single-phase step-voltage regulator become

Type A

$$\begin{aligned} &a = \frac{1}{a_R} \quad b = 0 \quad c = 0 \quad d = a_R \\ &A = a_R \quad B = 0 \end{aligned} \tag{7.78}$$

Type B

$$\begin{aligned} &a = a_R \quad b = 0 \quad c = 0 \quad d = \frac{1}{a_R} \\ &A = \frac{1}{a_R} \quad B = 0 \end{aligned} \tag{7.79}$$

where a_R is given by Equation 7.75 and the sign convention is given in Table 7.1.

TABLE 7.1

Sign Convention Table for a_R

	Type A	Type B
Raise	+	−
Lower	−	+

iv) Line Drop Compensator :

The changing of taps on a regulator is controlled by the "line drop compensator." Figure 7.11 shows an analog circuit of the compensator circuit and how it is connected to the distribution line through a potential transformer and a current transformer. Older regulators are controlled by an analog compensator circuit. Modern regulators are controlled by a digital compensator. The digital compensators require the same settings as the analog, because it is easy to visualize, the analog circuit will be used in this section. However, understand that the modern digital compensators perform the same function for changing the taps on the regulators.

The purpose of the line drop compensator is to model the voltage drop of the distribution line from the regulator to the "load center." The compensator is an analog circuit that is a scale model of the line circuit. The compensator input voltage is typically 120 V, which requires the potential transformer in Figure 7.11 to reduce the rated voltage down to 120 V. For a regulator connected line to ground, the rated voltage is the nominal line-to-neutral voltage, while for a regulator connected line to line, the rated voltage is the line-to-line voltage. The current transformer turns ratio is specified as CT_P:CT_S where the

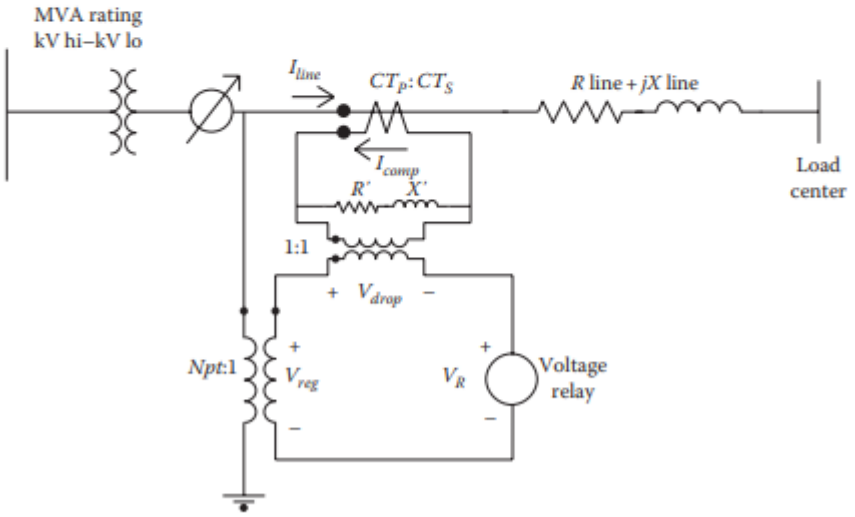

FIGURE 7.11
Line drop compensator circuit.

primary rating (CT_P) will typically be the rated current of the feeder. The setting that is most critical is that of R' and X' calibrated in volts. These values must represent the equivalent impedance from the regulator to the load center. The basic requirement is to force the per-unit line impedance to be equal to the per-unit compensator impedance. In order to cause this to happen, it is essential that a consistent set of base values be developed wherein the per-unit voltage and currents in the line and in the compensator are equal. The consistent set of base values is determined by selecting a base voltage and current for the line circuit and then computing the base voltage and current in the compensator by dividing the system base values by the potential transformer ratio and current transformer ratio, respectively. For regulators connected line to ground, the base system voltage is selected as the rated line-to-neutral voltage (V_{LN}), and the base system current is selected as the rating of the primary winding of the current transformer (CT_P). Table 7.2 gives "table of base values" and employs these rules for a regulator connected line to ground.

With the table of base values developed, the compensator R and X settings in Ohms can be computed by first computing the per-unit line impedance:

$$R_{pu} + jX_{pu} = \frac{Rline_{\Omega} + jXline_{\Omega}}{Zbase_{line}}$$

$$R_{pu} + jX_{pu} = (Rline_{\Omega} + jXline_{\Omega}) \cdot \frac{CT_P}{V_{LN}} \tag{7.80}$$

The per-unit impedance of Equation 7.80 must be the same in the line and in the compensator. The compensator impedance in Ohms is computed by multiplying the per-unit impedance by the base compensator impedance:

$$\begin{aligned} Rcomp_{\Omega} + jXcomp_{\Omega} &= (R_{pu} + jX_{pu}) \cdot Zbase_{comp} \\ &= (Rline_{\Omega} + jXline_{\Omega}) \cdot \frac{CT_P}{V_{LN}} \cdot \frac{V_{LN}}{N_{PT} \cdot CT_S} \\ &= (Rline_{\Omega} + jXline_{\Omega}) \cdot \frac{CT_P}{N_{PT} \cdot CT_S} \Omega \end{aligned} \tag{7.81}$$

TABLE 7.2

Table of Base Values

Base	Line Circuit	Compensator Circuit
Voltage	V_{LN}	$\frac{V_{LN}}{N_{PT}}$
Current	CT_P	CT_S
Impedance	$Zbase_{line} = \frac{V_{LN}}{CT_P}$	$Zbase_{comp} = \frac{V_{LN}}{N_{PT} \cdot CT_S}$

Equation 7.81 gives the value of the compensator R and X settings in Ohms. The compensator R and X settings in volts are determined by multiplying the compensator R and X in Ohms times the rated secondary current (CT_S) of the current transformer:

$$\begin{aligned} R' + jX' &= (Rcomp_{\Omega} + jXcomp_{\Omega}) \cdot CT_S \\ &= (Rline_{\Omega} + jXline_{\Omega}) \cdot \frac{CT_P}{N_{PT} \cdot CT_S} \cdot CT_S \\ &= (Rline_{\Omega} + jXline_{\Omega}) \cdot \frac{CT_P}{N_{PT}} \text{V} \end{aligned} \tag{7.82}$$

Knowing the equivalent impedance in Ohms from the regulator to the load center, the required value for the compensator settings in volts is determined by using Equation 7.82. This is demonstrated in Example 7.4.

b) Three-Phase Step-Voltage Regulators :

Three single-phase step-voltage regulators can be connected externally to form a three-phase regulator. When three single-phase regulators are connected together, each regulator has its own compensator circuit, and, therefore, the taps on each regulator are changed separately. Typical connections for single-phase step-regulators are

1. Single phase
2. Two regulators connected in "open wye" (sometimes referred to as "V" phase)
3. Three regulators connected in grounded wye
4. Two regulators connected in open delta
5. Three regulators connected in closed delta

A three-phase regulator has the connections between the single-phase windings internal to the regulator housing. The three-phase regulator is "gang" operated so that the taps on all windings change the same, and, as a result, only one compensator circuit is required. For this case, it is up to the engineer to determine which phase current and voltage will be sampled by the compensator circuit. Three-phase regulators will only be connected in a three-phase wye or closed delta.

Many times the substation transformer will have LTC windings on the secondary. The LTC will be controlled in the same way as a gang-operated three-phase regulator.

In the regulator models to be developed in the next sections, the phasing on the source side of the regulator will use capital letters *A*, *B*, and *C*. The load-side phasing will use lower case letters *a*, *b*, and *c*.

i) Wye-Connected Regulator :

Three Type B single-phase regulators connected in wye are shown in Figure 7.12. In Figure 7.12 the polarities of the windings are shown in the "raise" position. When the regulator is in the "lower" position, a reversing switch will have reconnected the series winding so that the polarity on the series

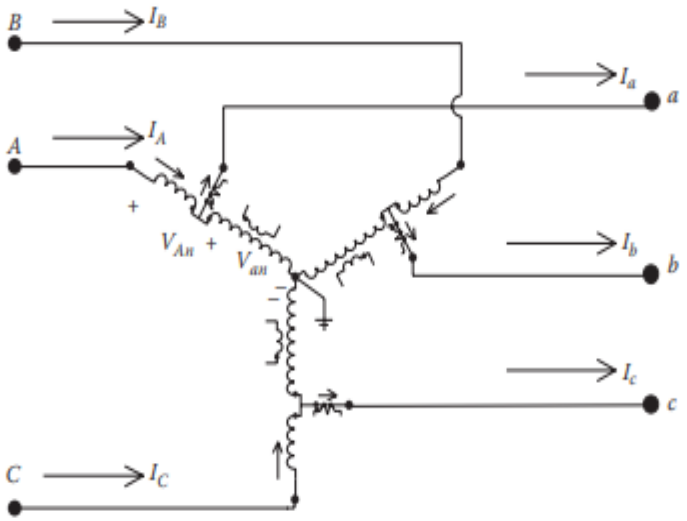

FIGURE 7.12
Wye-connected Type B regulators.

winding is now at the output terminal. Regardless of whether the regulator is raising or lowering the voltage, the following equations apply:

Voltage equations

$$\begin{bmatrix} V_{An} \\ V_{Bn} \\ V_{Cn} \end{bmatrix} = \begin{bmatrix} a_{R_a} & 0 & 0 \\ 0 & a_{R_b} & 0 \\ 0 & 0 & a_{R_c} \end{bmatrix} \cdot \begin{bmatrix} V_{an} \\ V_{bn} \\ V_{cn} \end{bmatrix} \tag{7.84}$$

where a_{R_a}, a_{R_b}, and a_{R_c} represent the effective turns ratios for the three single-phase regulators.

Equation 7.84 is of the form

$$[VLN_{ABC}] = [a] \cdot [VLN_{abc}] + [b] \cdot [I_{abc}] \tag{7.85}$$

Current equations

$$\begin{bmatrix} I_A \\ I_B \\ I_C \end{bmatrix} = \begin{bmatrix} \frac{1}{a_{R_a}} & 0 & 0 \\ 0 & \frac{1}{a_{R_b}} & 0 \\ 0 & 0 & \frac{1}{a_{R_c}} \end{bmatrix} \cdot \begin{bmatrix} I_a \\ I_b \\ I_c \end{bmatrix} \tag{7.86}$$

or

$$[I_{ABC}] = [c] \cdot [VLG_{abc}] + [d][I_{abc}] \tag{7.87}$$

Equations 7.85 and 7.87 are of the same form as the generalized equations that were developed for the three-phase line segment of Chapter 6. For a three-phase wye-connected step-voltage regulator, neglecting the series impedance and shunt admittance, the forward and backward sweep matrices are therefore defined as

$$[a] = \begin{bmatrix} a_{R_a} & 0 & 0 \\ 0 & a_{R_b} & 0 \\ 0 & 0 & a_{R_c} \end{bmatrix} \tag{7.88}$$

$$[b] = \begin{bmatrix} 0 & 0 & 0 \\ 0 & 0 & 0 \\ 0 & 0 & 0 \end{bmatrix} \tag{7.89}$$

$$[c] = \begin{bmatrix} 0 & 0 & 0 \\ 0 & 0 & 0 \\ 0 & 0 & 0 \end{bmatrix} \tag{7.90}$$

$$[d] = \begin{bmatrix} \frac{1}{a_{R_a}} & 0 & 0 \\ 0 & \frac{1}{a_{R_b}} & 0 \\ 0 & 0 & \frac{1}{a_{R_c}} \end{bmatrix} \tag{7.91}$$

$$[A] = \begin{bmatrix} \frac{1}{a_{R_a}} & 0 & 0 \\ 0 & \frac{1}{a_{R_b}} & 0 \\ 0 & 0 & \frac{1}{a_{R_c}} \end{bmatrix} \tag{7.92}$$

$$[B] = \begin{bmatrix} 0 & 0 & 0 \\ 0 & 0 & 0 \\ 0 & 0 & 0 \end{bmatrix} \tag{7.93}$$

In Equations 7.88, 7.91, and 7.93, the effective turns ratio for each regulator must satisfy $0.9 \leq a_{R_abc} \leq 1.1$ in 32 steps of 0.625%/step (0.75 V/step on 120 V base).

The effective turn ratios (a_{R_a}, a_{R_b}, and a_{R_c}) can take on different values when three single-phase regulators are connected in wye. It is also possible

---

to have a three-phase regulator connected in wye where the voltage and cur rent are sampled on only one phase and then all three phases are changed by the same number of taps.

ii) Closed Delta–Connected Regulators :

Three single-phase Type B regulators can be connected in a closed delta as shown in Figure 7.15. In the figure, the regulators are shown in the "raise" position.

The closed delta connection is typically used in three-wire delta feeders. Note that the potential transformers for this connection are monitoring the load-side line-to-line voltages and the current transformers are not monitoring the load-side line currents.

The relationships between the source side and currents and the voltages are needed. Equations 7.64 through 7.67 define the relationships between the series and shunt winding voltages and currents for a step-voltage regulator that must be satisfied no matter how the regulators are connected.

KVL is first applied around a closed loop starting with the line-to-line voltage between phases A and C on the source side. Refer to Figure 7.14, which defines the various voltages:

$$V_{AB} = V_{Aa} + V_{ab} - V_{Bb} \tag{7.94}$$

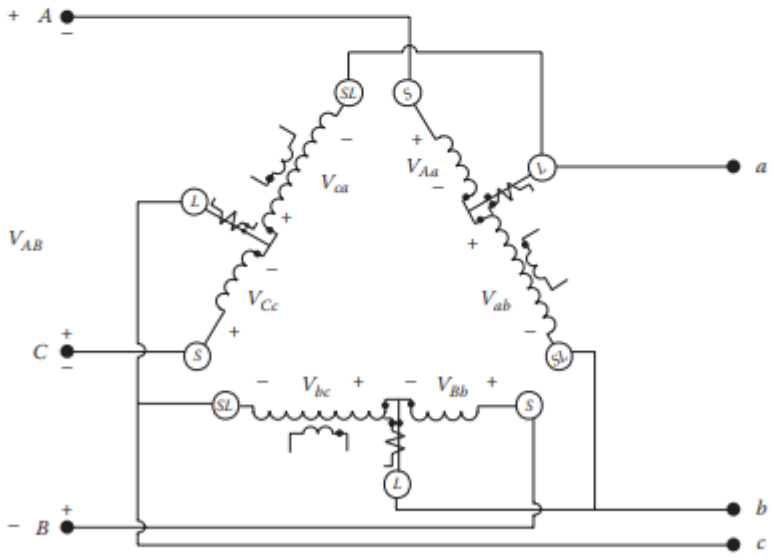

FIGURE 7.15
Closed delta–connected regulators with voltages.

but

$$V_{Bb} = -\frac{N_2}{N_1} \cdot V_{bc} \tag{7.95}$$

$$V_{Aa} = -\frac{N_2}{N_1} \cdot V_{ab} \tag{7.96}$$

Substitute Equations 7.95 and 7.96 into Equation 7.94 and simplify:

$$V_{AB} = \left(1 - \frac{N_2}{N_1}\right) \cdot V_{ab} + \frac{N_2}{N_1} \cdot V_{bc} = a_{R_ab} \cdot V_{ab} + (1 - a_{R_bc}) \cdot V_{bc} \tag{7.97}$$

The same procedure can be followed to determine the relationships between the other line-to-line voltages. The final three-phase equation is

$$\begin{bmatrix} V_{AB} \\ V_{BC} \\ V_{CA} \end{bmatrix} = \begin{bmatrix} a_{R_ab} & 1 - a_{R_bc} & 0 \\ 0 & a_{R_bc} & 1 - a_{R_ca} \\ 1 - a_{R_ab} & 0 & a_{R_ca} \end{bmatrix} \cdot \begin{bmatrix} V_{ab} \\ V_{bc} \\ V_{ca} \end{bmatrix} \tag{7.98}$$

Equation 7.98 is of the generalized form

$$[VLL_{ABC}] = [a] \cdot [VLL_{abc}] + [b] \cdot [I_{abc}] \tag{7.99}$$

Figure 7.16 shows the closed delta–delta connection with the defining currents.

The relationship between source and load line currents starts with applying KCL at the load-side terminal *a*.

$$I_a = I'_a + I_{ca} = I_A - I_{ab} + I_{ca} \tag{7.100}$$

but

$$I_{ab} = \frac{N_2}{N_1} \cdot I_A \tag{7.101}$$

$$I_{ca} = \frac{N_2}{N_1} \cdot I_C \tag{7.102}$$

Substitute Equations 7.100 and 7.101 into Equation 7.100 and simplify:

$$I_a = \left(1 - \frac{N_2}{N_1}\right) \cdot I_A + \frac{N_2}{N_1} I_C = a_{R_ab} \cdot I_A + (1 - a_{R_ca}) \cdot I_C \tag{7.103}$$

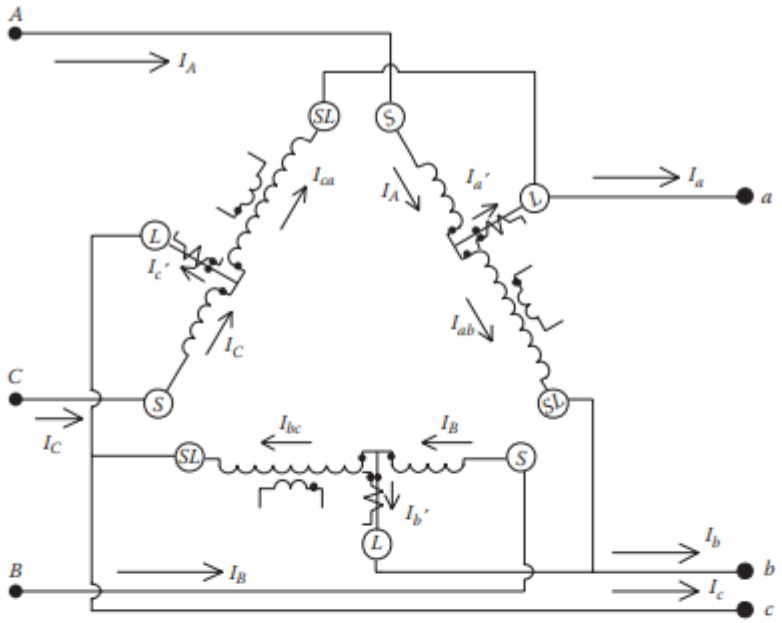

FIGURE 7.16
Closed delta–connected regulators with currents.

The same procedure can be followed at the other two load-side terminals. The resulting three-phase equation is

$$\begin{bmatrix} I_a \\ I_b \\ I_c \end{bmatrix} = \begin{bmatrix} a_{R_ab} & 0 & 1-a_{R_ca} \\ 1-a_{R_ab} & a_{R_bc} & 0 \\ 0 & 1-a_{R_bc} & a_{R_ca} \end{bmatrix} \cdot \begin{bmatrix} I_A \\ I_B \\ I_C \end{bmatrix} \tag{7.104}$$

Equation 7.104 is of the general form

$$[I_{abc}] = [D] \cdot [I_{ABC}] \tag{7.105}$$

where

$$[D] = \begin{bmatrix} a_{R_ab} & 0 & 1-a_{R_ca} \\ 1-a_{R_ab} & a_{R_bc} & 0 \\ 0 & 1-a_{R_bc} & a_{R_ca} \end{bmatrix}$$

The general form needed for the standard model is

$$[I_{ABC}] = [c] \cdot [VLL_{ABC}] + [d] \cdot [I_{abc}] \tag{7.106}$$

where $[d] = [D]^{-1}$.

As with the wye-connected regulators, the matrices [b] and [c] are zero as long as the series impedance and shunt admittance of each regulator are neglected. The closed delta connection can be difficult to apply. Note that in both the voltage and current equations, a change of the tap position in one regulator will affect voltages and currents in two phases. As a result, increasing the tap in one regulator will affect the tap position of the second regulator. In most cases, the bandwidth setting for the closed delta connection will have to be wider than that for wye-connected regulators.

iii)Open Delta–Connected Regulators:

Two Type B single-phase regulators can be connected in the "open" delta connection. Shown in Figure 7.17 is an open delta connection where two single-phase regulators have been connected between phases *AB* and *CB*.

Two additional open connections can be made by connecting the single-phase regulators between phases *BC* and *AC* and also between phases *CA* and *BA*.

The open delta connection is typically applied to three-wire delta feeders. Note that the potential transformers monitor the line-to-line voltages and the current transformers monitor the line currents. Once again the basic voltage and current relations of the individual regulators are used to determine the

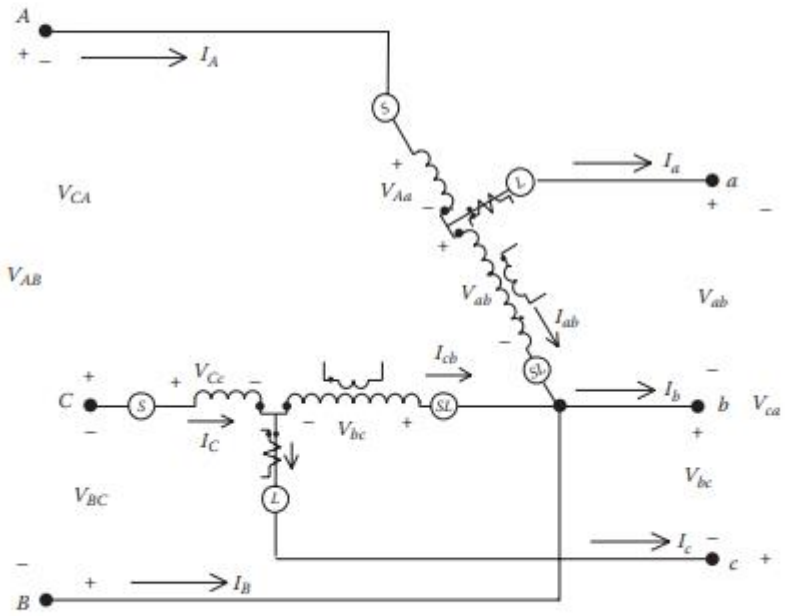

FIGURE 7.17
Open delta connection.

relationships between the source-side and load-side voltages and currents. The connection shown in Figure 7.17 will be used to derive the relationships and then the relationships of the other two possible connections can follow the same procedure.

The voltage V_{AB} across the first regulator consists of the voltage across the series winding plus the voltage across the shunt winding:

$$V_{AB} = V_{Aa} + V_{ab} \tag{7.107}$$

Paying attention to the polarity marks on the series and shunt windings, the voltage across the series winding is

$$V_{Aa} = -\frac{N_2}{N_1} \cdot V_{ab} \tag{7.108}$$

Substituting Equation 7.108 into Equation 7.107 yields

$$V_{AB} = \left(1 - \frac{N_2}{N_1}\right) \cdot V_{ab} = a_{R_ab} \cdot V_{ab} \tag{7.109}$$

Following the same procedure for the regulator connected across V_{BC}, the voltage equation is

$$V_{BC} = \left(1 - \frac{N_2}{N_1}\right) \cdot V_{bc} = a_{R_cb} \cdot V_{bc} \tag{7.110}$$

KVL must be satisfied so that

$$V_{CA} = -(V_{AB} + V_{BC}) = -a_{R_ab} \cdot V_{ab} - a_{R_cb} \cdot V_{bc} \tag{7.111}$$

Equations 7.107 through 7.109 can be put into matrix form:

$$\begin{bmatrix} V_{AB} \\ V_{BC} \\ V_{CA} \end{bmatrix} = \begin{bmatrix} a_{R_ab} & 0 & 0 \\ 0 & a_{R_cb} & 0 \\ -a_{R_ab} & -a_{R_cb} & 0 \end{bmatrix} \cdot \begin{bmatrix} V_{ab} \\ V_{bc} \\ V_{ca} \end{bmatrix} \tag{7.112}$$

Equation 7.112 in generalized form is

$$[VLL_{ABC}] = [a_{LL}] \cdot [VLL_{abc}] + [b_{LL}] \cdot [I_{abc}] \tag{7.113}$$

where

$$[a_{LL}] = \begin{bmatrix} a_{R_ab} & 0 & 0 \\ 0 & a_{R_cb} & 0 \\ -a_{R_ab} & -a_{R_cb} & 0 \end{bmatrix} \tag{7.114}$$

The effective turns ratio of each regulator is given by Equation 7.75. Again, as long as the series impedance and shunt admittance of the regulators are neglected, $[b_{LL}]$ is zero. Equation 7.114 gives the line-to-line voltages on the source side as a function of the line-to-line voltages on the load side of the open delta using the generalized matrices. Up to this point, the relationships between the voltages have been in terms of line-to-neutral voltages. In Chapter 8, the [W] matrix is derived. This matrix is used to convert line-to-line voltages to equivalent line-to-neutral voltages.

$$[VLN_{ABC}] = [W] \cdot [VLL_{ABC}] \quad \text{where } [W] = \frac{1}{3} \cdot \begin{bmatrix} 2 & 1 & 0 \\ 0 & 2 & 1 \\ 1 & 0 & 2 \end{bmatrix} \tag{7.115}$$

The line-to-neutral voltages are converted to line-to-line voltages by

$$[VLL_{ABC}] = [D] \cdot [VLN_{ABC}] \quad \text{where } [D] = \begin{bmatrix} 1 & -1 & 0 \\ 0 & 1 & -1 \\ -1 & 0 & 1 \end{bmatrix} \tag{7.116}$$

Convert Equation 7.113 to line-to-neutral form:

$$\begin{aligned} &[VLL_{ABC}] = [a_{LL}] \cdot [VLL_{abc}] + [b_{LL}] \cdot [I_{abc}] \\ &[VLN_{ABC}] = [W] \cdot [VLL_{ABC}] = [W] \cdot [a_{LL}] \cdot [D] \cdot [VLN_{abc}] \\ &[VLN_{ABC}] = [a_{reg}] \cdot [VLN_{abc}] \\ &\text{where } [a_{reg}] = [W] \cdot [a_{LL}] \cdot [D] \end{aligned} \tag{7.117a}$$

When the load-side line-to-line voltages are needed as function of the source-side line-to-line voltages, the necessary equation is

$$\begin{bmatrix} V_{ab} \\ V_{bc} \\ V_{ca} \end{bmatrix} = \begin{bmatrix} \frac{1}{a_{R_ab}} & 0 & 0 \\ 0 & \frac{1}{a_{R_cb}} & 0 \\ -\frac{1}{a_{R_ab}} & -\frac{1}{a_{R_cb}} & 0 \end{bmatrix} \cdot \begin{bmatrix} V_{AB} \\ V_{BC} \\ V_{CA} \end{bmatrix} \tag{7.117b}$$

$$[VLL_{abc}] = [A_{LL}] \cdot [VLL_{ABC}] \tag{7.118}$$

where

$$[A_{LL}] = \begin{bmatrix} \frac{1}{a_{R_ab}} & 0 & 0 \\ 0 & \frac{1}{a_{R_cb}} & 0 \\ -\frac{1}{a_{R_ab}} & -\frac{1}{a_{R_cb}} & 0 \end{bmatrix} \tag{7.119}$$

Equation 7.118 is converted to line-to-neutral form by

$$[VLN_{abc}] = [A_{reg}] \cdot [VLN_{ABC}] \quad \text{where } [A_{reg}] = [W] \cdot [A_{LL}] \cdot [D] \tag{7.120}$$

There is no general equation for each of the elements of $[A_{reg}]$. The matrix $[A_{reg}]$ must be computed according to Equation 7.120.

Referring to Figure 7.17, the current equations are derived by applying KCL at the *L* node of each regulator:

$$I_A = I_a + I_{ab} \tag{7.121}$$

but

$$I_{ab} = \frac{N_2}{N_1} \cdot I_A$$

Therefore, Equation 7.121 becomes

$$\left(1 - \frac{N_2}{N_1}\right) I_A = I_a \tag{7.122}$$

Therefore

$$I_A = \frac{1}{a_{R_ab}} \cdot I_a \tag{7.123}$$

In a similar manner, the current equation for the second regulator is given by

$$I_C = \frac{1}{a_{R_cb}} \cdot I_c \tag{7.124}$$

Because this is a three-wire delta line, then

$$I_B = -(I_A + I_C) = -\frac{1}{a_{R_ab}} \cdot I_a - \frac{1}{a_{R_cb}} \cdot I_c \tag{7.125}$$

In matrix form, the current equations become

$$\begin{bmatrix} I_A \\ I_B \\ I_C \end{bmatrix} = \begin{bmatrix} \frac{1}{a_{R_ab}} & 0 & 0 \\ -\frac{1}{a_{R_ab}} & 0 & -\frac{1}{a_{R_cb}} \\ 0 & 0 & \frac{1}{a_{R_cb}} \end{bmatrix} \cdot \begin{bmatrix} I_a \\ I_b \\ I_c \end{bmatrix} \tag{7.126}$$

In generalized form, Equation 7.126 becomes

$$[I_{ABC}] = [c_{reg}] \cdot [VLN_{ABC}] + [d_{reg}] \cdot [I_{abc}] \tag{7.127}$$

where

$$[d_{reg}] = \begin{bmatrix} \frac{1}{a_{R_ab}} & 0 & 0 \\ -\frac{1}{a_{R_ab}} & 0 & -\frac{1}{a_{R_cb}} \\ 0 & 0 & \frac{1}{a_{R_cb}} \end{bmatrix} \tag{7.128}$$

When the series impedances and shunt admittances are neglected, the constant matrix $[c_{reg}]$ will be zero.

The load-side line currents as a function of the source line currents are given by

$$\begin{bmatrix} I_a \\ I_b \\ I_c \end{bmatrix} = \begin{bmatrix} a_{R_ab} & 0 & 0 \\ -a_{R_ab} & 0 & -a_{R_cb} \\ 0 & 0 & a_{R_cb} \end{bmatrix} \cdot \begin{bmatrix} I_A \\ I_B \\ I_C \end{bmatrix} \tag{7.129}$$

$$[I_{abc}] = [D_{reg}] \cdot [I_{ABC}] \tag{7.130}$$

where

$$[D_{reg}] = \begin{bmatrix} a_{R_ab} & 0 & 0 \\ -a_{R_ab} & 0 & -a_{R_cb} \\ 0 & 0 & a_{R_cb} \end{bmatrix} \tag{7.131}$$

The determination of the R and X compensator settings for the open delta follows the same procedure as that of the wye-connected regulators.

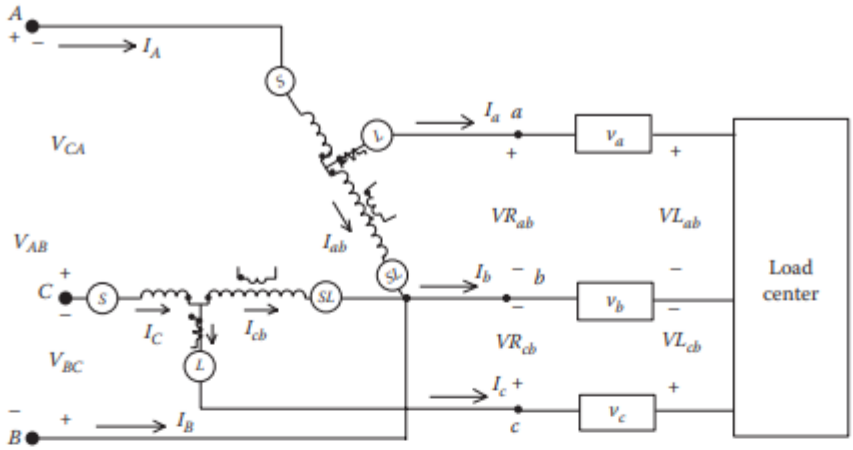

FIGURE 7.18
Open delta connected to a load center.

However, care must be taken to recognize that in the open delta connection the voltages applied to the compensator are line to line and the currents are line currents. The open delta–connected regulators will maintain only two of the line-to-line voltages at the load center within defined limits. The third line-to-line voltage will be dictated by the other two (KVL). Therefore, it is possible that the third voltage may not be within the defined limits.

With reference to Figure 7.18, an equivalent impedance between the regulators and the load center must be computed. Since each regulator is sampling line-to-line voltages and a line current, the equivalent impedance is computed by taking the appropriate line-to-line voltage drop and dividing by the sampled line current. For the open delta connection shown in Figure 7.18, the equivalent impedances are computed as

$$Zeq_a = \frac{VR_{ab} - VL_{ab}}{I_a} \tag{7.132}$$

$$Zeq_c = \frac{VR_{cb} - VL_{cb}}{I_c} \tag{7.133}$$

The units of these impedances will be in system Ohms. They must be converted to compensator volts by applying Equation 7.78. For the open delta connection, the potential transformer will transform the system line-to-line rated voltage down to 120 V. Example 7.8 demonstrates how the compensator R and X settings are determined knowing the line-to-line voltages at the regulator and at the load center.

FORWARD/BACKWARD SWEEP DISTRIBUTION LOAD FLOW ALGORITHM

Modified “Ladder” Iterative Technique:
The ladder technique is composed of two parts:
1. Forward sweep
2. Backward sweep

The forward sweep computes the downstream voltages from the source by applying Equation 6.26:

$$[VLG_{abc}]_m = [A]\cdot[VLG_{abc}]_n - [B]\cdot[I_{abc}] \tag{6.26}$$

To start the process, the load currents $[I_{abc}]$ are assumed to be equal to zero and the load voltages are computed. In the first iteration the load voltages will be the same as the source voltages.

The backward sweep computes the currents from the load back to the source using the most recently computed voltages from the forward sweep. Equation 6.16a is applied for this sweep:

$$[I_{abc}]_n = [c]\cdot[VLG_{abc}]_m + [d]\cdot[I_{abc}]_m \tag{6.16a}$$

Recall that for all practical purposes the $[c]$ matrix is zero so Equation 6.16a is simplified to be

$$[I_{abc}]_n = [d]\cdot[I_{abc}]_m \tag{6.16b}$$

After the first forward and backward sweeps, the new load voltages are computed using the most recent currents. The forward and backward sweeps continue until the error between the new and previous load voltages is within a specified tolerance. Using the matrices computed in Example 6.1, a very simple Mathcad® program that applies the ladder iterative technique is demonstrated in Example 6.5.

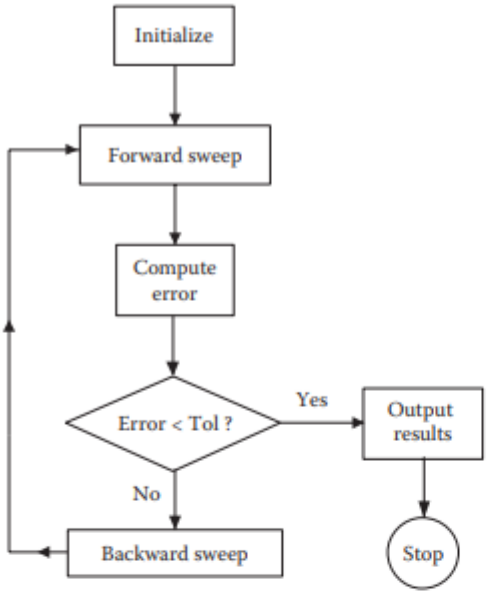

FIGURE 6.6
Simple modified ladder flowchart.

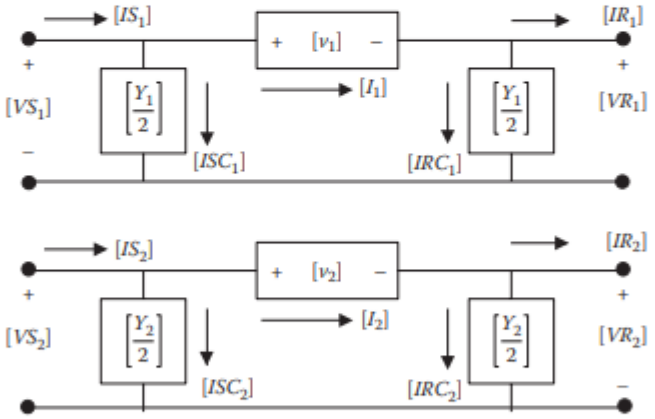

FIGURE 6.7
Equivalent Pi parallel lines.

The first step in computing the *a*, *b*, *c*, *d* matrices is to multiply the 6 × 6 phase impedance matrix from Chapter 4 and the 6 × 6 shunt admittance matrix from Chapter 5 by the distance that the lines are parallel:

$$\begin{bmatrix}[v1]\\[v2]\end{bmatrix} = \begin{bmatrix}[z11] & [z12]\\[z21] & [z22]\end{bmatrix} \cdot length \cdot \begin{bmatrix}[I1]\\[I2]\end{bmatrix} = \begin{bmatrix}[Z11] & [Z12]\\[Z21] & [Z22]\end{bmatrix} \cdot \begin{bmatrix}[I1]\\[I2]\end{bmatrix} \text{V} \qquad (6.57)$$

$$[v] = [Z] \cdot [I]$$

$$\begin{bmatrix}[y11] & [y12]\\ [y21] & [y22]\end{bmatrix}\cdot length=\begin{bmatrix}[Y11] & [Y12]\\ [Y21] & [Y22]\end{bmatrix}\text{S} \tag{6.58}$$

Referring to Figure 6.5, the line currents in the two circuits are given by

$$\begin{bmatrix}[I_1]\\ [I_2]\end{bmatrix}=\begin{bmatrix}[IR_1]\\ [IR_2]\end{bmatrix}+\frac{1}{2}\cdot\begin{bmatrix}[Y_{11}] & [Y_{12}]\\ [Y_{21}] & [Y_{22}]\end{bmatrix}\cdot\begin{bmatrix}[VR_1]\\ [VR_2]\end{bmatrix}\text{A}$$
$$[I]=[IR]+\frac{1}{2}\cdot[Y]\cdot[VR] \tag{6.59}$$

The sending end voltages are given by

$$\begin{bmatrix}[VS_1]\\ [VS_2]\end{bmatrix}=\begin{bmatrix}[VR_1]\\ [VR_2]\end{bmatrix}+\begin{bmatrix}[Z_{11}] & [Z_{12}]\\ [Z_{21}] & [Z_{22}]\end{bmatrix}\cdot\begin{bmatrix}[I_1]\\ [I_2]\end{bmatrix}\text{A}$$
$$[VS]=[VR]+[Z]\cdot[I] \tag{6.60}$$

Substitute Equation 6.59 into Equation 6.60:

$$\begin{bmatrix}[VS_1]\\ [VS_2]\end{bmatrix}=\begin{bmatrix}[VR_1]\\ [VR_2]\end{bmatrix}+\begin{bmatrix}[Z_{11}] & [Z_{12}]\\ [Z_{21}] & [Z_{22}]\end{bmatrix}\cdot\left(\begin{bmatrix}[IR_1]\\ [IR_2]\end{bmatrix}+\frac{1}{2}\cdot\begin{bmatrix}[Y_{11}] & [Y_{12}]\\ [Y_{21}] & [Y_{22}]\end{bmatrix}\cdot\begin{bmatrix}[VR_1]\\ [VR_2]\end{bmatrix}\right)$$
$$[VS]=[VR]+[Z]\cdot\left([IR]+\frac{1}{2}\cdot[Y]\cdot[VR]\right) \tag{6.61}$$

Combine terms in Equation 6.61:

$$\begin{bmatrix}[VS_1]\\ [VS_2]\end{bmatrix}=\left(\begin{bmatrix}[U]\\ [U]\end{bmatrix}+\frac{1}{2}\cdot\begin{bmatrix}[Z_{11}] & [Z_{12}]\\ [Z_{21}] & [Z_{22}]\end{bmatrix}\begin{bmatrix}[Y_{11}] & [Y_{12}]\\ [Y_{21}] & [Y_{22}]\end{bmatrix}\right)\begin{bmatrix}[VR_1]\\ [VR_2]\end{bmatrix}$$
$$+\begin{bmatrix}[Z_{11}] & [Z_{12}]\\ [Z_{21}] & [Z_{22}]\end{bmatrix}\cdot\begin{bmatrix}[IR_1]\\ [IR_2]\end{bmatrix} \tag{6.62}$$
$$[VS]=\left([U]+\frac{1}{2}\cdot[Z]\cdot[Y]\right)\cdot[VR]+[Z]\cdot[IR]$$

Equation 6.62 is of the form

$$[VS]=[a]\cdot[VR]+[b]\cdot[IR] \tag{6.63}$$

where

$$[a] = [U] + \frac{1}{2} \cdot [Z] \cdot [Y]$$
$$[b] = [Z] \tag{6.64}$$

The sending end currents are given by

$$\begin{bmatrix} [IS_1] \\ [IS_2] \end{bmatrix} = \begin{bmatrix} [I_1] \\ [I_2] \end{bmatrix} + \frac{1}{2} \cdot \begin{bmatrix} [Y_{11}] & [Y_{12}] \\ [Y_{21}] & [Y_{22}] \end{bmatrix} \cdot \begin{bmatrix} [VS_1] \\ [VS_2] \end{bmatrix}$$
$$[IS] = [I] + \frac{1}{2} \cdot [Y] \cdot [VS] \tag{6.65}$$

Substitute Equations 6.59 and 6.63 into Equation 6.65 using the shorthand form:

$$[IS] = [IR] + \frac{1}{2} \cdot [Y] \cdot [VR] + \frac{1}{2} \cdot [Y] \cdot ([a] \cdot [VR] + [b] \cdot [IR])\,\text{A} \tag{6.66}$$

Combine terms in Equation 6.67:

$$[IS] = \frac{1}{2} \cdot ([Y] + [Y] \cdot [a]) \cdot [VR] + \left([U] + \frac{1}{2} \cdot [Y] \cdot [b] \right) \cdot [IR] \tag{6.67}$$

Equation 6.67 is of the form

$$[IS] = [c] \cdot [VR] + [d] \cdot [IR] \tag{6.68}$$

where

$$[c] = \frac{1}{2} \cdot ([Y] + [Y] \cdot [a]) = \left(\frac{1}{2} \cdot \left([Y] + [Y] \cdot \left([U] + \frac{1}{2} \cdot [Z] \cdot [Y] \right) \right) \right)$$
$$[c] = [Y] + \frac{1}{4} \cdot [Y] \cdot [Z] \cdot [Y] \tag{6.69}$$
$$[d] = [U] + \frac{1}{2} \cdot [Y] \cdot [b] = [U] + \frac{1}{2} \cdot [Y] \cdot [Z]$$

The derived matrices [*a*], [*b*], [*c*], [*d*] will be 6 × 6 matrices. These four matrices can all be partitioned between the third and fourth rows and columns. The final voltage equation in partitioned form is given by

$$\begin{bmatrix} [VS_1] \\ [VS_2] \end{bmatrix} = \begin{bmatrix} [a_{11}] & [a_{12}] \\ [a_{21}] & [a_{22}] \end{bmatrix} \cdot \begin{bmatrix} [VR_1] \\ [VR_2] \end{bmatrix} + \begin{bmatrix} [b_{11}] & [b_{12}] \\ [b_{21}] & [b_{22}] \end{bmatrix} \cdot \begin{bmatrix} [IR_1] \\ [IR_2] \end{bmatrix} \tag{6.70}$$

The final current equation in partitioned form is given by

$$\begin{bmatrix}[IS_1]\\[IS_2]\end{bmatrix}=\begin{bmatrix}[c_{11}] & [c_{12}]\\[c_{21}] & [c_{22}]\end{bmatrix}\cdot\begin{bmatrix}[VR_1]\\[VR_2]\end{bmatrix}+\begin{bmatrix}[d_{11}] & [d_{12}]\\[d_{21}] & [d_{22}]\end{bmatrix}\cdot\begin{bmatrix}[IR_1]\\[IR_2]\end{bmatrix} \tag{6.71}$$

Equations 6.70 and 6.71 are used to compute the sending end voltages and currents of two parallel lines. The matrices [A] and [B] are used to compute the receiving end voltages when the sending end voltages and receiving end currents are known. Solving Equation 6.63 for [VR],

$$\begin{aligned}[VR] &= [a]^{-1}\cdot([VS]-[b]\cdot[IR])\\ [VR] &= [a]^{-1}\cdot[VS]-[a]^{-1}\cdot[b]\cdot[IR]\\ [VR] &= [A]\cdot[VS]-[B]\cdot[IR]\end{aligned} \tag{6.72}$$

where

$$[A]=[a]^{-1}$$

$$[B]=[a]^{-1}\cdot[b]$$

In expanded form, Equation 6.72 becomes

$$\begin{bmatrix}VR_1\\VR_2\end{bmatrix}=\begin{bmatrix}[A_{11}] & [A_{12}]\\[A_{21}] & [A_{22}]\end{bmatrix}\cdot\begin{bmatrix}VS_1\\VS_2\end{bmatrix}-\begin{bmatrix}[B_{11}] & [B_{12}]\\[B_{21}] & [B_{22}]\end{bmatrix}\cdot\begin{bmatrix}IR_1\\IR_2\end{bmatrix} \tag{6.73}$$

2 MARKS QUESTION & ANSWERS:

1. Write the Equations of Exact Line Segment Model ?

Ans:

The line-to-line voltages are computed by

$$\begin{bmatrix}V_{ab}\\V_{bc}\\V_{ca}\end{bmatrix}_m=\begin{bmatrix}1 & -1 & 0\\0 & 1 & -1\\-1 & 0 & 1\end{bmatrix}\cdot\begin{bmatrix}V_{ag}\\V_{bg}\\V_{cg}\end{bmatrix}_m=[D]\cdot[VLG_{abc}]_m$$

where

$$[D]=\begin{bmatrix}1 & -1 & 0\\0 & 1 & -1\\-1 & 0 & 1\end{bmatrix}$$

The Line Current at node n :

$$[I_{abc}]_n=[c]\cdot[VLG_{abc}]_m+[d]\cdot[I_{abc}]_m$$

Voltage Unbalance:

$$V_{unbalance}=\frac{|Maximum\,Deviation\ from\ Average|}{|V_{average}|}\cdot 100\%$$

2. Draw the Exact Line Segment Model ?

Ans:

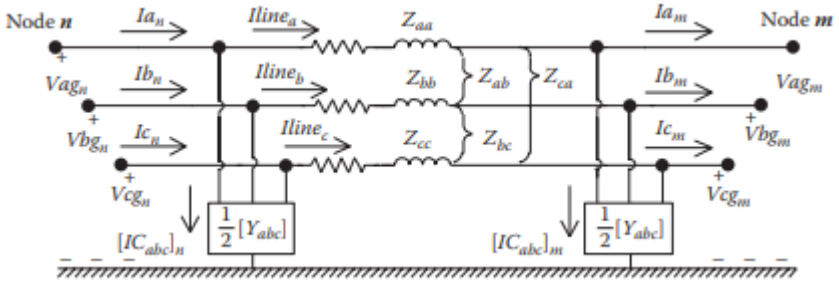

3. Write the Generalized Matrices for Modified Line Segment Model?

Ans: When the shunt admittance is neglected, the generalized matrices become

$$[a] = [U]$$

$$[b] = [Z_{abc}]$$

$$[c] = [0]$$

$$[d] = [U]$$

$$[A] = [U]$$

$$[B] = [Z_{abc}]$$

4. Draw the Modified Line Segment Model diagram:

Ans:

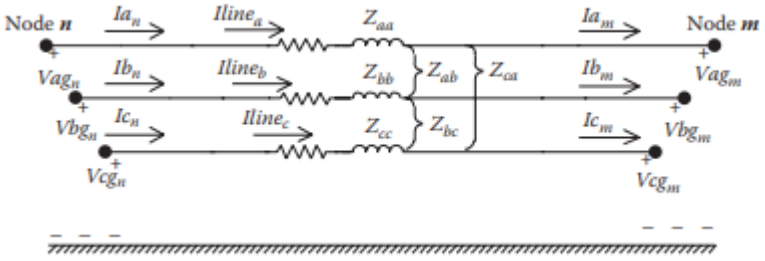

5. Draw the Approximate Line Segment Model diagram:

Ans:

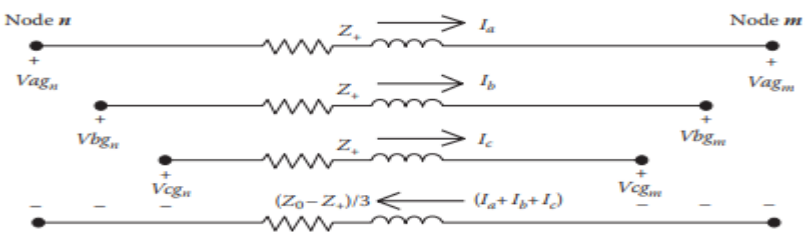

6. The ladder technique is composed of how many parts?

ANS: 1. Forward sweep 2. Backward sweep

7. Draw the Flowchart for Forward/ Backward sweep Distribution Load Flow Algorithm (Ladder Technique) ?

Ans:

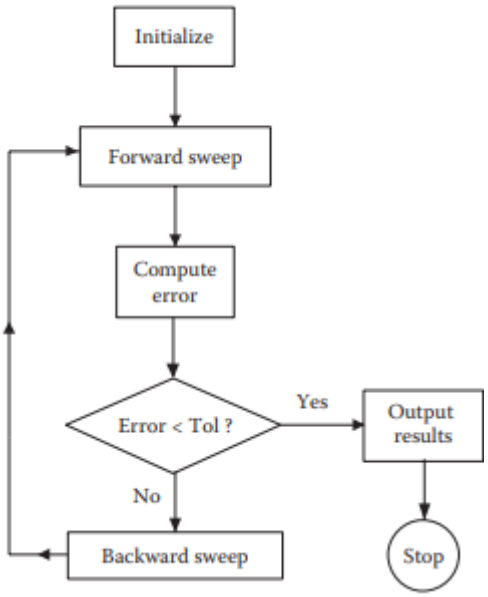

8. Write the Receiving End Voltage Equations for Forward/ Backward sweep Distribution Load Flow Algorithm (Ladder Technique)?

Ans:

$$\begin{bmatrix} VR_1 \\ VR_2 \end{bmatrix} = \begin{bmatrix} [A_{11}] & [A_{12}] \\ [A_{21}] & [A_{22}] \end{bmatrix} \cdot \begin{bmatrix} VS_1 \\ VS_2 \end{bmatrix} - \begin{bmatrix} [B_{11}] & [B_{12}] \\ [B_{21}] & [B_{22}] \end{bmatrix} \cdot \begin{bmatrix} IR_1 \\ IR_2 \end{bmatrix}$$

9. Short notes on Standard Voltage Ratings?

Ans:

The American National Standards Institute (ANSI) standard ANSI C84.1-1995 for "Electric Power Systems and Equipment Voltage Ratings (60 Hertz)" provides the following definitions for system voltage terms [1]:

- *System voltage*: The root mean square (rms) phasor voltage of a portion of an alternating current electric system. Each system voltage pertains to a portion of the system that is bounded by transformers or utilization equipment.
- *Nominal system voltage*: The voltage by which a portion of the system is designated and to which certain operating characteristics of the system are related. Each nominal system voltage pertains to a portion of the system bounded by transformers or utilization equipment.
- *Maximum system voltage*: The highest system voltage that occurs under normal operating conditions, and the highest system voltage for which equipment and other components are designed for satisfactory continuous operation without derating of any kind.
- *Service voltage*: The voltage at the point where the electrical system of the supplier and the electrical system of the user are connected.
- *Utilization voltage*: The voltage at the line terminals of utilization equipment.
- *Nominal utilization voltage*: The voltage rating of certain utilization equipment used on the system.

10. Define System Voltage?

Ans: The root mean square (rms) phasor voltage of a portion of an alternating current electric system. Each system voltage pertains to a portion of the system that is bounded by transformers or utilization equipment

11. Define Nominal system voltage?

Ans: The voltage by which a portion of the system is designated and to which certain operating characteristics of the system are related. Each nominal system voltage pertains to a portion of the system bounded by transformers or utilization equipment

12. Define Maximum system voltage?

Ans: The highest system voltage that occurs under normal operating conditions, and the highest system voltage for which equipment and other components are designed for satis factory continuous operation without derating of any kind.

13. Define Service voltage?

Ans: : The voltage at the point where the electrical system of the supplier and the electrical system of the user are connected.

14. Define Utilization voltage?

Ans: The voltage at the line terminals of utilization equipment.

15. Define Nominal utilization voltage?

Ans: The voltage rating of certain utilization equipment used on the system.

10 Marks Questions:

1. Explain Exact Line Segment Model with Neat Diagram and Analysis?
2. Explain Modified Line Segment Model with Neat Diagram and Analysis?
3. Explain Approximate Line Segment Model with Neat Diagram and Analysis?
4. Explain Step Voltage Regulator with Neat Diagram?
5. Explain Different Types of Step Voltage Regulators with Neat Diagrams?
6. Explain Line drop compensator with Neat Diagrams?
7. Explain Forward / Backward sweep distribution Load flow Algorithm (Ladder Technique) with flowchart?

EDSA

UNIT IV

Voltage-Drop and Power-Loss Calculation

Analysis of non-three phase primary lines, concepts of four-wire multi-grounded common neutral distribution system, Percent power loss calculation, Distribution feeder cost calculation methods, Capacitor installation types, types of three-phase capacitor-bank connections, Economic justification for capacitors – Numerical problems

As discussed in THREE-PHASE BALANCED PRIMARY LINES , a utility company strives to achieve a well-balanced distribution system in order to improve system voltage regulation by means of equally loading each phase. Figure 7.1 shows a primary system with either a three-phase three-wire or a three-phase four-wire main. The laterals can be either (1) three-phase three-wire, (2) three-phase four-wire, (3) single phase with line-to-line voltage, ungrounded, (4) single phase with line-to-neutral voltage, grounded, or (5) two-phase plus neutral, open wye.

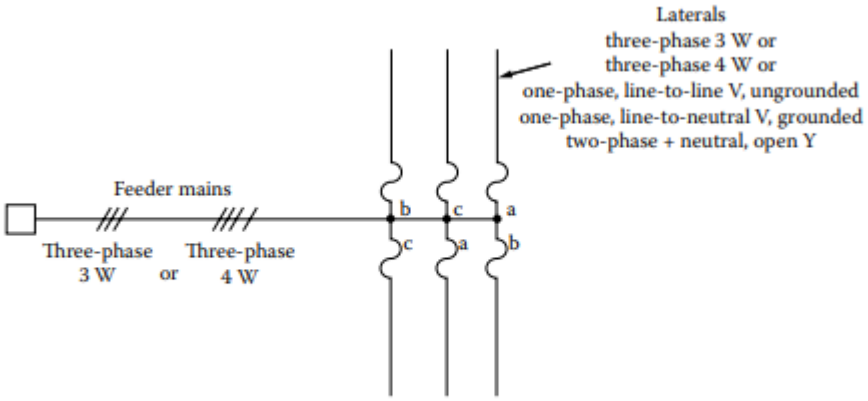

FIGURE 7.1 Various lateral types that exist in the United States.

NON-THREE-PHASE PRIMARY LINES:

Usually there are many laterals on a primary feeder that are not necessarily in three phase, for example, single phase, which causes the voltage drop and power loss due to load current not only in the phase conductor but also in the return path.

I) SINGLE-PHASE TWO-WIRE LATERALS WITH UNGROUNDED NEUTRAL:

Assume that an overloaded single-phase lateral is to be changed to an equivalent three-phase three wire and balanced lateral, holding the load constant. Since the power input to the lateral is the same as before,

$$S_{1\phi} = S_{3\phi} \quad \text{----------(7.1)}$$

where the subscripts 1ϕ and 3ϕ refer to the single-phase and three-phase circuits, respectively. Equation 7.1 can be rewritten as

$$\left(\sqrt{3}\times V_s\right)I_{1\phi} = 3V_sI_{3\phi} \qquad \text{……(7.2)}$$

where Vs is the line-to-neutral voltage. Therefore, from Equation 2,

$$I_{1\phi} = \sqrt{3}\times I_{3\phi} \qquad (7.3)$$

which means that the current in the single-phase lateral is 1.73 times larger than the one in the equivalent three-phase lateral. The voltage drop in the three-phase lateral can be expressed as

$$\mathrm{VD}_{3\phi} = I_{3\phi}(R\cos\theta + X\sin\theta) \qquad (7.4)$$

and in the single-phase lateral as

$$\mathrm{VD}_{1\phi} = I_{1\phi}(K_R R\cos\theta + K_X X\sin\theta) \qquad (7.5)$$

where

K_R and K_X are conversion constants of R and X and are used to convert them from their three-phase values to the equivalent single-phase values

$K_R = 2.0$

$K_X = 2.0$ when underground (UG) cable is used

$K_X \cong 2.0$ when overhead line is used, with approximately a ±10% accuracy

Therefore, Equation 7.5 can be rewritten as

$$\mathrm{VD}_{1\phi} = I_{1\phi}(2R\cos\theta + 2X\sin\theta) \qquad (7.6)$$

or substituting Equation 7.3 into Equation 7.6,

$$\mathrm{VD}_{1\phi} = 2\sqrt{3}\times I_{3\phi}(R\cos\theta + X\sin\theta) \qquad (7.7)$$

By dividing Equation 7.7 by Equation 7.4 side by side,

$$\frac{\mathrm{VD}_{1\phi}}{\mathrm{VD}_{3\phi}} = 2\sqrt{3} \qquad (7.8)$$

which means that *the voltage drop in the single-phase ungrounded lateral is approximately 3.46 times larger than the one in the equivalent three-phase lateral*. Since base voltages for the single-phase and three-phase laterals are

$$V_{B(1\phi)} = \sqrt{3} \times V_{s,L-N} \tag{7.9}$$

and

$$V_{B(3\phi)} = V_{s,L-N} \tag{7.10}$$

Equation 7.8 can be expressed in per units as

$$\frac{\mathrm{VD}_{\mathrm{pu},1\phi}}{\mathrm{VD}_{\mathrm{pu},3\phi}} = 2.0 \tag{7.11}$$

which means that *the per unit voltage drop in the single-phase ungrounded lateral is two times larger than the one in the equivalent three-phase lateral*. For example, if the per unit voltage drop in the single-phase lateral is 0.10, it would be 0.05 in the equivalent three-phase lateral.

The power losses due to the load currents in the conductors of the single-phase lateral and the equivalent three-phase lateral are

$$P_{\mathrm{LS},1\phi} = 2 \times I_{1\phi}^2 R \tag{7.12}$$

and

$$P_{\mathrm{LS},3\phi} = 3 \times I_{3\phi}^2 R \tag{7.13}$$

respectively. Substituting Equation 7.3 into Equation 7.12,

$$P_{\mathrm{LS},1\phi} = 2\left(\sqrt{3} \times I_{3\phi}\right)^2 R \tag{7.14}$$

and dividing the resultant Equation 7.14 by Equation 7.13 side by side,

$$\frac{P_{\mathrm{LS},1\phi}}{P_{\mathrm{LS},3\phi}} = 2.0 \tag{7.15}$$

which means that the *power loss due to the load currents in the conductors of the single-phase lateral is two times larger than the one in the equivalent three-phase lateral.*

Therefore, one can conclude that *by changing a single-phase lateral to an equivalent three-phase lateral, both the per unit voltage drop and the power loss due to copper losses in the primary line are approximately halved.*

II) SINGLE-PHASE TWO-WIRE UNGROUNDED LATERALS :

In general, this system is presently not used due to the following disadvantages. There is no earth current in this system. It can be compared to a three-phase four-wire balanced lateral in the following manner. Since the power input to the lateral is the same as before,

$$S_{1\phi} = S_{3\phi} \quad \text{----------(7.16)}$$

or

$$V_s \times I_{1\phi} = 3 \times V_s \times I_{3\phi} \tag{7.17}$$

from which

$$I_{1\phi} = 3 \times I_{3\phi} \tag{7.18}$$

The voltage drop in the three-phase lateral can be expressed as

$$\text{VD}_{3\phi} = I_{3\phi}(R\cos\theta + X\sin\theta) \tag{7.19}$$

and in the single-phase lateral as

$$\text{VD}_{1\phi} = I_{1\phi}(K_R R\cos\theta + K_X X\sin\theta) \tag{7.20}$$

where

$K_R = 2.0$ when a full-capacity neutral is used, that is, if the wire size used for neutral conductor is the same as the size of the phase wire
$K_R > 2.0$ when a reduced-capacity neutral is used
$K_X \cong 2.0$ when overhead line is used

Therefore, if $K_R = 2.0$ and $K_X = 2.0$, Equation 7.20 can be rewritten as

$$\text{VD}_{1\phi} = I_{1\phi}(2R\cos\theta + 2X\sin\theta) \tag{7.21}$$

or substituting Equation 7.18 into Equation 7.21,

$$\text{VD}_{1\phi} = 6 \times I_{3\phi}(R\cos\theta + X\sin\theta) \tag{7.22}$$

Dividing Equation 7.22 by Equation 7.19 side by side,

$$\frac{\text{VD}_{1\phi}}{\text{VD}_{3\phi}} = 6.0 \tag{7.23a}$$

or

$$\frac{\text{VD}_{\text{pu},1\phi}}{\text{VD}_{\text{pu},1\phi}} = 2\sqrt{3} = 3.46 \tag{7.23b}$$

which means that *the voltage drop in the single-phase two-wire ungrounded lateral with full-capacity neutral is six times larger than the one in the equivalent three-phase four-wire balanced lateral.*

The power losses due to the load currents in the conductors of the single-phase two-wire unigrounded lateral with full-capacity neutral and the equivalent three-phase four-wire balanced lateral are

$$P_{\text{LS},1\phi} = I_{1\phi}^2(2R) \tag{7.24}$$

and

$$P_{LS,3\phi} = 3 \times I_{3\phi}^2 R \tag{7.25}$$

respectively. Substituting Equation 7.18 into Equation 7.24,

$$P_{LS,1\phi} = (3 \times I_{3\phi})^2 (2R) \tag{7.26}$$

and dividing Equation 7.26 by Equation 7.25 side by side,

$$\frac{P_{LS,1\phi}}{P_{LS,3\phi}} = 6.0 \tag{7.27}$$

Therefore, *the power loss due to load currents in the conductors of the single-phase two-wire unigrounded lateral with full-capacity neutral is six times larger than the one in the equivalent three-phase four-wire lateral.*

III) SINGLE-PHASE TWO-WIRE LATERALS WITH MULTIGROUNDED COMMON NEUTRALS :

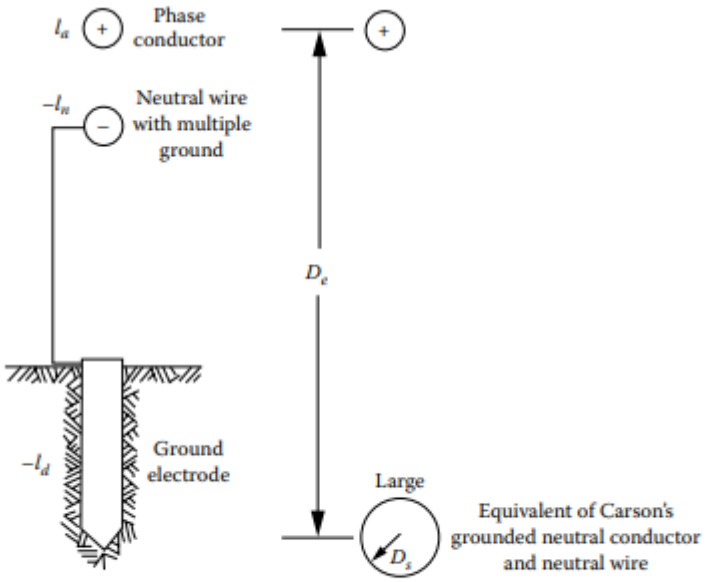

FIGURE 7.2 A single-phase lateral with multigrounded common neutral.

Figure 7.2 shows a single-phase two-wire lateral with multigrounded common neutral. As shown in the figure, the neutral wire is connected in parallel (i.e., multigrounded) with the ground wire at various places through ground electrodes in order to reduce the current in the neutral. "Ia" is the current in the phase conductor, "Iw" is the return current in the neutral wire, and Id is the return current in Carson's equivalent ground conductor. According to Morrison [1], the return current in the neutral wire is

$$I_n = \zeta_1 I_a \quad \text{where } \zeta_1 = 0.25\text{–}0.33 \tag{7.28}$$

and it is almost independent of the size of the neutral conductor.

In Figure 7.2, the constant K_R is less than 2.0 and the constant K_X is more or less equal to 2.0 because of conflictingly large D_m (i.e., mutual geometric mean distance or geometric mean radius) of Carson's equivalent ground (neutral) conductor. Therefore, Morrison's data [1] (probably empirical) indicate that

$$\mathrm{VD}_{\mathrm{pu},1\phi} = \zeta_2 \times \mathrm{VD}_{\mathrm{pu},3\phi} \quad \text{where } \zeta_2 = 3.8\text{–}4.2 \tag{7.29}$$

and

$$\mathrm{P}_{\mathrm{LS},1\phi} = \zeta_3 \times \mathrm{P}_{\mathrm{LS},3\phi} \quad \text{where } \zeta_3 = 3.5\text{–}3.75 \tag{7.30}$$

Therefore, assuming that the data from Morrison [1] are accurate,

$$K_R < 2.0 \quad \text{and} \quad K_X < 2.0$$

the per unit voltage drops and the power losses due to load currents can be approximated as

$$\mathrm{VD}_{\mathrm{pu},1\phi} \cong 4.0 \times \mathrm{VD}_{\mathrm{pu},3\phi} \tag{7.31}$$

and

$$\mathrm{P}_{\mathrm{LS},1\phi} \cong 3.6 \times \mathrm{P}_{\mathrm{LS},3\phi} \tag{7.32}$$

for the illustrative problems.

IV) TWO-PHASE PLUS NEUTRAL (OPEN-WyE) LATERALS :

Figure 7.3 shows an open-wye-connected lateral with two phase and neutral. The neutral conductor can be unigrounded or multigrounded, but because of disadvantages, the unigrounded neutral is generally not used. If the neutral is unigrounded, all neutral current is in the neutral conductor itself. Theoretically, it can be expressed that

$$\mathbf{V} = \mathbf{ZI} \tag{7.33}$$

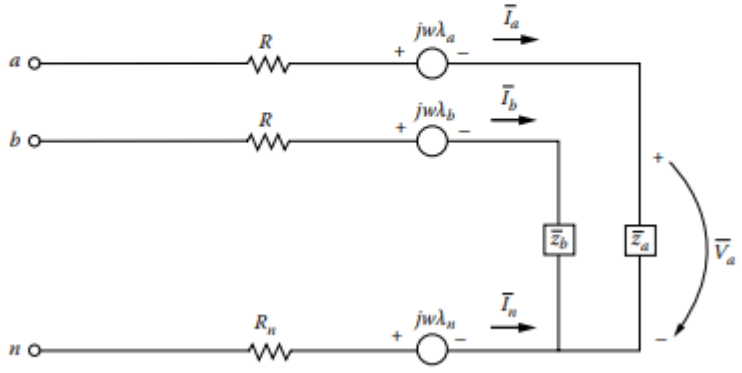

FIGURE 7.3 An open-wye connected lateral.

where

$$\overline{V}_a = \overline{Z}_a \overline{I}_a \tag{7.34}$$

$$\overline{V}_b = \overline{Z}_b \overline{I}_b \tag{7.35}$$

It is correct for equal load division between the two phases.

Assuming equal load division among phases, the two-phase plus neutral lateral can be compared to an equivalent three-phase lateral, holding the total kilovoltampere load constant. Therefore,

$$S_{2\phi} = S_{3\phi} \tag{7.36}$$

or

$$2V_S I_{2\phi} = 3V_S I_{3\phi} \tag{7.37}$$

from which

$$I_{2\phi} = \frac{3}{2} I_{3\phi} \tag{7.38}$$

The voltage-drop analysis can be performed depending upon whether the neutral is unigrounded or multigrounded. *If the neutral is unigrounded and the neutral conductor impedance (Z_n) is zero*, the voltage drop in each phase is

$$\text{VD}_{2\phi} = I_{2\phi}(K_R R\cos\theta + K_X X\sin\theta) \tag{7.39}$$

where

$K_R = 1.0$
$K_X = 1.0$

Therefore,

$$\text{VD}_{2\phi} = I_{2\phi}(R\cos\theta + X\sin\theta) \tag{7.40}$$

or substituting Equation 7.38 into Equation 7.40,

$$\text{VD}_{2\phi} = \frac{3}{2} I_{3\phi}(R\cos\theta + X\sin\theta) \tag{7.41}$$

Dividing Equation 7.41 by Equation 7.19, side by side,

$$\frac{\text{VD}_{2\phi}}{\text{VD}_{3\phi}} = \frac{3}{2} \tag{7.42}$$

However, *if the neutral is unigrounded and the neutral conductor impedance (Z_n) is larger than zero*,

$$\frac{\text{VD}_{2\phi}}{\text{VD}_{3\phi}} > \frac{3}{2} \tag{7.43}$$

Therefore, in this case, some unbalanced voltages are inherent.

However, *if the neutral is multigrounded and* $Z_n > 0$, the data from Morrison [1] indicate that the per unit voltage drop in each phase is

$$\mathrm{VD}_{\mathrm{pu},2\phi} = 2.0 \times \mathrm{VD}_{\mathrm{pu},3\phi} \tag{7.44}$$

when a full-capacity neutral is used and

$$\mathrm{VD}_{\mathrm{pu},2\phi} = 2.1 \times \mathrm{VD}_{\mathrm{pu},3\phi} \tag{7.45}$$

when a reduced-capacity neutral (i.e., when the neutral conductor employed is one or two sizes smaller than the phase conductors) is used.

The power loss analysis also depends upon whether the neutral is unigrounded or multigrounded. *If the neutral is unigrounded*, the power loss is

$$P_{\mathrm{LS},2\phi} = I_{2\phi}^2 (K_R R) \tag{7.46}$$

where

$K_R = 3.0$ when a full-capacity neutral is used
$K_R > 3.0$ when a reduced-capacity neutral is used

Therefore, if $K_R = 3.0$,

$$\frac{P_{\mathrm{LS},2\phi}}{P_{\mathrm{LS},3\phi}} = \frac{3I_{2\phi}^2 R}{3I_{3\phi}^2 R} \tag{7.47}$$

or

$$\frac{P_{\mathrm{LS},2\phi}}{P_{\mathrm{LS},3\phi}} = 2.25 \tag{7.48}$$

On the other hand, *if the neutral is multigrounded*,

$$\frac{P_{\mathrm{LS},2\phi}}{P_{\mathrm{LS},3\phi}} < 2.25 \tag{7.49}$$

Based on the data from Morrison [1], the approximate value of this ratio is

$$\frac{P_{\mathrm{LS},2\phi}}{P_{\mathrm{LS},3\phi}} \cong 1.64 \tag{7.50}$$

which means that the *power loss* due to load currents in the conductors of the *two-phase three-wire lateral with multigrounded neutral is approximately 1.64 times larger than the one in the equivalent three-phase lateral.*

PROBLEMS:

Example 7.1

Assume that a uniformly distributed area is served by a three-phase four-wire multigrounded 6-mile-long main located in the middle of the service area. There are six laterals on each side of the main. Each lateral is 1 mile apart with respect to each other, and the first lateral is located on the main 1 mile away from the substation so that the total three-phase load on the main is 6000 kVA. Each lateral is 10 mi long and is made up of #6 AWG copper conductors and serving a

uniformly distributed peak load of 500 kVA, at 7.2/12.47 kV. The K constant of a #6 AWG copper conductor is 0.0016/kVA-mi. Determine the following:

a. The maximum voltage drop to the end of each lateral, if the lateral is a three-phase lateral with multigrounded common neutrals
b. The maximum voltage drop to the end of each lateral, if the lateral is a two-phase plus full-capacity multigrounded neutral (open-wye) lateral
c. The maximum voltage drop to the end of each lateral, if the lateral is a single-phase two-wire lateral with multigrounded common neutrals

Solution

a. For the three-phase four-wire lateral with multigrounded common neutrals,

$$\%VD_{3\phi} = \frac{1}{2} \times K \times S$$

$$= \left(\frac{10\,\text{mi}}{2}\right)\left(0.0016\frac{\%\,\text{VD}}{\text{kVA}-\text{mi}}\right)(500\,\text{kVA}) = 4$$

b. For the two-phase plus full-capacity multigrounded neutral (open-wye) lateral, according to the results of Morrison,

$$\%\,\text{VD}_{2\phi} = 2(\%\,\text{VD}_{3\phi})$$

$$= 2(4\%) = 8$$

c. For the single-phase two-wire lateral with multigrounded common neutrals, according to the results of Morrison,

$$\%\,\text{VD}_{1\phi} = 4(\%\,\text{VD}_{3\phi})$$

$$= 4(4\%) = 16$$

Example 7.2

A three-phase express feeder has an impedance of 6 + *j*20 ohms per phase. At the load end, the line-to-line voltage is 13.8 kV, and the total three-phase power is 1200 kW at a lagging power factor of 0.8. By using the *line-to-neutral* method, determine the following:

a. The line-to-line voltage at the sending end of the feeder (i.e., at the substation low-voltage bus)
b. The power factor at the sending end
c. The copper loss (i.e., the transmission loss) of the feeder
d. The power at the sending end in kW

Solution

Since in an express feeder, the line current is the same at the beginning or at the end of the line,

$$I_L = I_S = I_R = \frac{P_{R(3\phi)}}{\sqrt{3}V_{R(L-L)}\cos\theta}$$

$$= \frac{1{,}200\,\text{kW}}{\sqrt{3}(13.8\,\text{kV})0.8} = 62.75\,\text{A}$$

and

$$V_{R(L-N)} = \frac{V_{R(L-L)}}{\sqrt{3}}$$
$$= \frac{13{,}800\ \text{V}}{\sqrt{3}} = 7{,}976.4\,\text{V}.$$

using this *as the reference voltage*, the sending-end voltage is found from

$$\bar{V}_{S(L-N)} = \bar{V}_{R(L-N)} + \bar{I}_L \bar{Z}_L$$

where

$$\bar{V}_{R(L-N)} = 7{,}976.9\angle 0^\circ\ \text{V}$$

$$\bar{I}_L = \bar{I}_S = \bar{I}_R = I_L(\cos\theta_R - \sin\theta_R)$$
$$= 62.83(0.8 - j0.6) = 62.83\angle -36.87^\circ\,\text{A}$$

$$\bar{Z}_L = 6 + j20 = 20.88\angle 73.3^\circ\ \Omega$$

a. $$\bar{V}_{S(L-N)} = 7{,}976.9\angle 0^\circ + (62.83\angle -36.87^\circ)(20.88\angle 73.7^\circ)$$
$$= 9{,}065.95\angle 4.93^\circ\,\text{V}$$

and

$$\bar{V}_{S(L-L)} = \sqrt{3}\bar{V}_{S(L-N)}$$
$$= \sqrt{3}(9{,}065.95)\angle 4.93^\circ + 30^\circ$$
$$= 15{,}684.09\angle 34.93^\circ\,\text{V}$$

b. $$\theta_S = \left|\theta_{\bar{V}_{S(L-N)}}\right| - \left|\theta_{\bar{I}_S}\right| = 4.9^\circ - \left|-36.87^\circ\right| = 41.8^\circ \quad \text{and} \quad \cos\theta_S = 0.745\ \text{lagging}$$

c. $$P_{\text{loss}(3\phi)} = 3I_L^2 R = 3(62.83)^2 \times 6$$
$$= 71{,}056.96\ \text{W} \cong 71.057\ \text{kW}$$

d. $$P_{S(3\phi)} = P_{R(3\phi)} + P_{\text{loss}(3\phi)}$$
$$= 1{,}200 + 71.057 = 1{,}271.057\ \text{kW}$$

or

$$P_{S(3\phi)} = \sqrt{3}V_{S(L-L)}I_S \cos\theta_S$$
$$= \sqrt{3}(15{,}684.09)(62.83)0.745 \cong 1{,}270.073\,\text{kW}$$

Example 7.3

Repeat Example 7.2 by using the *single-phase equivalent* method.

Solution

Here, the single-phase equivalent current is found from

$$I_{eq(1\phi)} = \frac{P_{3\phi}}{V_{R(L-L)}\cos\theta}$$

$$= \frac{1200\,\text{kW}}{(13.8\,\text{kV})(0.8)} = 108.7\,\text{A}$$

where

$$I_{eq(1\phi)} = \sqrt{3} I_{3\phi}$$

or

$$I_{3\phi} = I_L = \frac{I_{eq(1\phi)}}{\sqrt{3}}$$

$$= \frac{108.7\,\text{A}}{\sqrt{3}} = 62.8\,\text{A}$$

a. $$\bar{V}_{S(L-L)} = \bar{V}_{R(L-L)} + \bar{I}_{eq(1\phi)}\bar{Z}_L$$

$$= 13{,}800\angle 0^\circ + (108.7\angle -36.9^\circ)(20.88\angle 73.3^\circ)$$

$$= 15{,}684.76\angle 4.93^\circ + 30^\circ\,\text{V}$$

b. $$\theta_S = \theta_{\bar{V}_{S(L-N)}} - \theta_{\bar{I}_L} = 41.8^\circ \quad \text{so that} \quad \cos\theta_S = 0.745\,\text{lagging}$$

c. $$P_{loss(3\phi)} = I^2_{eq(1\phi)}R$$

$$= 108.7^2 \times 6 = 70.89\,\text{kW}$$

d. $$P_{S(3\phi)} = P_{R(3\phi)} + P_{loss(3\phi)}$$

$$= 1{,}200 + 70.89 = 1{,}270.89\,\text{kW}$$

3. FOUR-WIRE MULTIGROUNDED COMMON NEUTRAL DISTRIBUTION SYSTEM

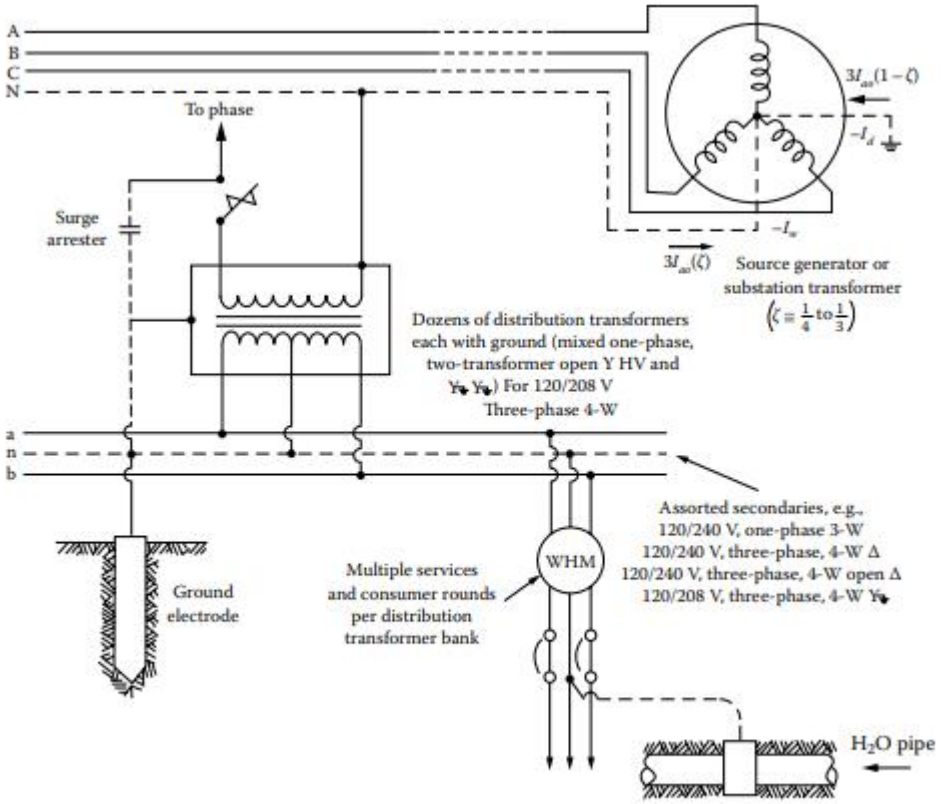

FIGURE 7.4 A four-wire multigrounded common neutral distribution system.

Figure 7.4 shows a typical four-wire multigrounded common neutral distribution system. Because of the economic and operating advantages, this system is used extensively. The assorted secondaries can be, for example, either (1) 120/240 V single-phase three wire, (2) 120/240 V three-phase four wire connected in delta, (3) 120/240 V three-phase four-wire connected in open delta, or (4) 120/208 V three-phase four wire connected in grounded wye. Where primary and secondary systems are both existent, the same conductor is used as the common neutral for both systems. The neutral is grounded at each distribution transformer, at various places where no transformers are connected and to water pipes or driven ground electrodes at each user's service entrance. The secondary neutral is also grounded at the distribution transformer and the service drops (SDs).

Typical values of the resistances of the ground electrodes are 5, 10, or 15 Ω. Under no circumstances should they be larger than 25 Ω. Usually, a typical metal water pipe system has a resistance value of less than 3 Ω. A part of the unbalanced, or zero sequence, load current flows in the neutral wire, and the remaining part flows in the ground and/or the water system. Usually the same conductor size is used for both phase and neutral conductors.

PROBLEMS:

Example 7.4

Assume that the circuit shown in Figure 7.5 represents a single-phase circuit if dimensional variables are used; it represents a balanced three-phase circuit if per unit variables are used. $R + jX$ represents the total impedance of lines and/or transformers. The power factor of the load is $\cos\theta = \cos(\theta_{V_R} - \theta_I)$. Find the load power factor for which the voltage drop is maximum.

Solution

The line voltage drop is

$$\text{VD} = I(R\cos\theta + X\sin\theta)$$

By taking its partial derivative with respect to the θ angle and equating the result to zero,

$$\frac{\partial(\text{VD})}{\partial\theta} = I(R\cos\theta + X\sin\theta) = 0$$

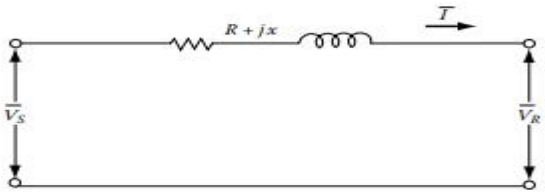

FIGURE 7.5 A single-phase circuit.

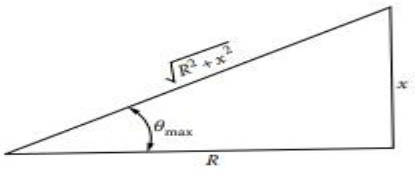

FIGURE 7.6 Impedance triangle.

or

$$\frac{X}{R} = \frac{\sin\theta}{\cos\theta} = \tan\theta$$

therefore

$$\theta_{\max} = \tan^{-1}\frac{X}{R}$$

and from the impedance triangle shown in Figure 7.6, the load power factor for which the voltage drop is maximum is

$$\text{PF} = \cos\theta_{\max} = \frac{R}{(R^2 + X^2)^{1/2}} \tag{7.51}$$

also

$$\cos\theta_{\max} = \cos\left(\tan^{-1}\frac{X}{R}\right) \tag{7.52}$$

Example 7.5

Consider the three-phase four-wire 416-V secondary system with balanced per-phase loads at *A*, *B*, and *C* as shown in Figure 7.7. Determine the following:

a. Calculate the total voltage drop, or as it is sometimes called, *voltage regulation*, in one phase of the lateral by using the approximate method.
b. Calculate the real power per phase for each load.
c. Calculate the reactive power per phase for each load.
d. Calculate the total (*three-phase*) kilovoltampere output and load power factor of the distribution transformer.

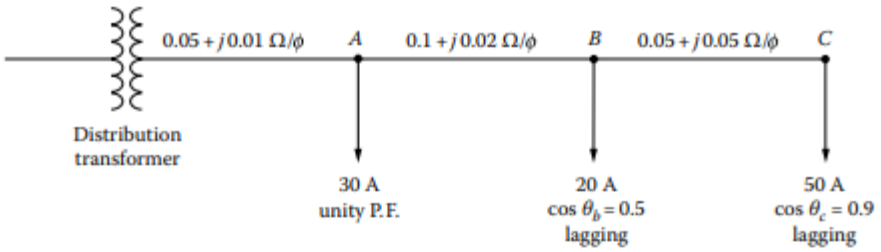

FIGURE 7.7 One-line diagram of a three-phase four-wire secondary system.

Solution

a. Using the approximate voltage-drop equation, that is,

$$VD = I(R\cos\theta + X\sin\theta)$$

the voltage drop for each load can be calculated as

$$VD_A = 30(0.05\times 1.0 + 0.01\times 0) = 1.5\,V$$
$$VD_B = 20(0.15\times 0.5 + 0.03\times 0.866) = 2.02\,V$$
$$VD_C = 50(0.20\times 0.9 + 0.08\times 0.436) = 10.744\,V$$

Therefore, the total voltage drop is

$$\sum VD = VD_A + VD_B + VD_C$$
$$= 1.5 + 2.02 + 10.744$$
$$= 14.264\ V$$

or

$$\frac{14.264\,V}{240\,V} = 0.0594\,pu\,V$$

b. The per-phase real power for each load can be calculated from

$$P = VI\cos\theta$$

or

$$P_A = 240\times 30\times 1.0 = 7.2\,kW$$
$$P_B = 240\times 20\times 0.5 = 2.4\,kW$$
$$P_C = 240\times 50\times 0.9 = 10.8\,kW$$

Therefore, the total per-phase real power is

$$\sum P = P_A + P_B + P_C$$
$$= 7.2 + 2.4 + 10.8$$
$$= 20.4\,kW$$

c. The reactive power per phase for each load can be calculated from

$$Q = VI\sin\theta$$

or

$$Q_A = 240 \times 30 \times 0 = 0\,\text{kvar}$$
$$Q_B = 240 \times 20 \times 0.866 = 4.156\,\text{kvar}$$
$$Q_C = 240 \times 50 \times 0.436 = 5.232\,\text{kvar}$$

Therefore, the total per-phase reactive power is

$$\sum Q = Q_A + Q_B + Q_C$$
$$= 0 + 4.156 + 5.232$$
$$= 9.389\,\text{kvar}$$

d. Therefore, the per-phase kilovoltampere output of the distribution transformer is

$$S = (P^2 + Q^2)^{1/2}$$
$$= (20.4^2 + 9.389^2)^{1/2}$$
$$\cong 22.457\ \text{kVA/phase}$$

Thus the total (or three-phase) kilovoltampere output of the distribution transformer is

$$3 \times 22.457 = 67.37\ \text{kVA}$$

Hence, the load power factor of the distribution transformer is

$$\cos\theta = \frac{\sum P}{S}$$
$$= \frac{20.4\,\text{kW}}{22.457\,\text{kVA}}$$
$$= 0.908\ \text{lagging}$$

4) PERCENT POWER (OR COPPER) LOSS :

The percent power (or conductor) loss of a circuit can be expressed as

$$\%\, I^2R = \frac{P_{LS}}{P_r} \times 100$$

$$= \frac{I^2R}{P_r} \times 100 \qquad (7.59)$$

where

P_{LS} is the power loss of a circuit, kW
$= I^2R$
P_r is the power delivered by the circuit, kW

The conductor I^2R losses at a load factor of 0.6 can readily be found from Table 7.5 for various voltage levels.

At times, in ac circuits, the ratio of percent power, or conductor, loss to percent voltage regulation can be used, and it is given by the following approximate expression:

$$\frac{\%\, I^2R}{\%\, \text{VD}} = \frac{\cos\phi}{\cos\theta \times \cos(\phi - \theta)} \qquad (7.60)$$

where

$\%\, I^2R$ is the percent power loss of a circuit
% VD is the percent voltage drop of the circuit
ϕ is the impedance angle $= \tan^{-1}(X/R)$
θ is the power-factor angle

Distribution feeder cost calculation methods

5) METHOD TO ANALYZE DISTRIBUTION COSTS :

To make any meaningful feeder-size selection, the distribution engineer should make a cost study associated with feeders in addition to the voltage-drop and power-loss considerations. The cost analysis for each feeder size should include (1) investment cost of the installed feeder, (2) cost of energy lost due to I^2R losses in the feeder conductors, and (3) cost of demand lost, that is, the cost of useful system capacity lost (including generation, transmission, and distribution systems), in order to maintain adequate system capacity to supply the I^2R losses in the distribution feeder conductors. Therefore, the total annual feeder cost of a given size feeder can be expressed as

$$\text{TAC} = \text{AIC} + \text{AEC} + \text{ADC}\ \$/\text{mi} \qquad (7.61)$$

where

TAC is the total annual equivalent cost of feeder, $/mi
AIC is the annual equivalent of investment cost of installed feeder, $/mi
AEC is the annual equivalent of energy cost due to I^2R losses in feeder conductors, $/mi
ADC is the annual equivalent of demand cost incurred to maintain adequate system capacity to supply I^2R losses in feeder conductors, $/mi

5.1 ANNUAL EQUIVALENT OF INVESTMENT COST:

The annual equivalent of investment cost of a given size feeder can be expressed as

$$\text{AIC} = \text{IC}_F \times i_F \text{ \$/mi} \tag{7.62}$$

where

AIC is the annual equivalent of investment cost of a given size feeder, \$/mi
IC_F is the cost of installed feeder, \$/mi
i_F is the annual fixed charge rate applicable to feeder

The general utility practice is to include cost of capital, depreciation, taxes, insurance, and operation and maintenance (O&M) expenses in the *annual fixed charge rate* or so-called *carrying charge rate*. It is given as a decimal.

5.2 ANNUAL EQUIVALENT OF ENERGY COST:

The annual equivalent of energy cost due to I^2R losses in feeder conductors can be expressed as

$$\text{AEC} = 3I^2R \times \text{EC} \times \text{F}_{\text{LL}} \times \text{F}_{\text{LSA}} \times 8760 \text{ \$/mi} \tag{7.63}$$

where

AEC is the annual equivalent of energy cost due to I^2R losses in feeder conductors, \$/mi
EC is the cost of energy, \$/kWh
F_{LL} is the load-location factor
F_{LS} is the loss factor
F_{LSA} is the loss-allowance factor

The load-location factor of a feeder with uniformly distributed load can be defined as

$$F_{\text{LL}} = \frac{s}{\ell} \tag{7.64}$$

where

F_{LL} is the load-location factor in decimal
s is the distance of point on feeder where total feeder load can be assumed to be concentrated for the purpose of calculating I^2R losses
ℓ is the total feeder length, mi

The loss factor can be defined as the ratio of the average annual power loss to the peak annual power loss and can be found approximately for urban areas from

$$F_{\text{LS}} = 0.3F_{\text{LD}} + 0.7F_{\text{LD}}^2 \tag{7.65}$$

and for rural areas [6],

$$F_{\text{LS}} = 0.16F_{\text{LD}} + 0.84F_{\text{LD}}^2$$

The loss-allowance factor is an allocation factor that allows for the additional losses incurred in the total power system due to the transmission of power from the generating plant to the distribution substation.

5.3 ANNUAL EQUIVALENT OF DEMAND COST :

The annual equivalent of demand cost incurred to maintain adequate system capacity to supply the I^2R losses in the feeder conductors can be expressed as

$$\text{ADC} = 3I^2R \times F_{\text{LL}} \times F_{\text{PR}} \times F_R \times F_{\text{LSA}}[(C_G \times i_G) + (C_T \times i_T) + (C_S \times i_S)] \text{ \$/mi} \quad (7.66)$$

where

ADC is the annual equivalent of demand cost incurred to maintain adequate system capacity to supply 12R losses in feeder conductors, \$/mi
F_{LL} is the load-location factor
F_{PR} is the peak-responsibility factor
F_R is the reserve factor
F_{LSA} is the loss-allowance factor
C_G is the cost of (peaking) generation system \$/kVA
C_T is the cost of transmission system, \$/kVA
C_S is the cost of distribution substation, \$/kVA
i_G is the annual fixed charge rate applicable to generation system
i_T is the annual fixed charge rate applicable to transmission system
i_S is the annual fixed charge rate applicable to distribution substation

The reserve factor is the ratio of total generation capability to the total load and losses to be supplied. The peak-responsibility factor is a per unit value of the peak feeder losses that are coincident with the system peak demand.

5.4) LEVELIZED ANNUAL COST :

In general, the costs of energy and demand and even O&M expenses vary from year to year during a given time, as shown in Figure 7.16a; therefore, it becomes necessary to levelize these costs over the expected economic life of the feeder, as shown in Figure 7.16b

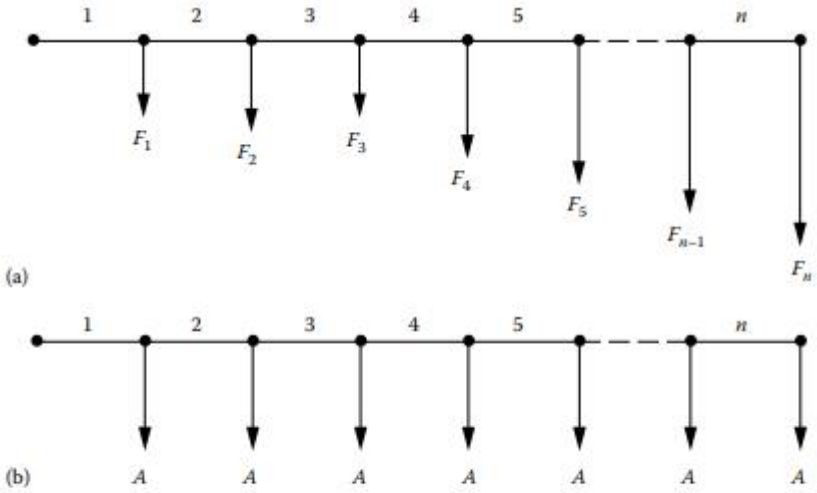

FIGURE 7.16 Illustration of the levelized annual cost concept: (a) unlevelized annual cost flow diagram and (b) levelized cost flow diagram.

Assume that the costs occur discretely at the end of each year, as shown in Figure 7.16a. The *levelized annual cost** of equal amounts can be calculated as

$$A = \left[F_1 \left(\frac{P}{F} \right)_1^i + F_2 \left(\frac{P}{F} \right)_2^i + F_3 \left(\frac{P}{F} \right)_3^i + \cdots + F_n \left(\frac{P}{F} \right)_n^i \right] \left(\frac{A}{P} \right)_n^i \tag{7.67}$$

or

$$A = \left[\sum_{j=1}^{n} F_j \left(\frac{P}{F} \right)_j^i \right] \left(\frac{A}{P} \right)_n^i \tag{7.68}$$

where

A is the levelized annual cost, \$/year
F_j is the unequal (or actual or unlevelized) annual cost, \$/year
n is the economic life, year
i is the interest rate
$(P/F)_n^i$ is the present worth (or present equivalent) of a future sum factor (with i interest rate and n years of economic life), also known as *single-payment discount factor*
$(A/P)_n^i$ is the uniform series worth of a present sum factor, also known as *capital-recovery factor*

The single-payment discount factor and the capital-recovery factor can be found from the compounded-interest tables or from the following equations, respectively,

$$\left(\frac{P}{F} \right)_n^i = \frac{1}{(1+i)^n} \tag{7.69}$$

and

$$\left(\frac{A}{P} \right)_n^i = \frac{i(1+i)^n}{(1+i)^n - 1} \tag{7.70}$$

5.6 ECONOMIC ANALYSIS OF EQUIPMENT LOSSES :

Today, the substantially escalating plant, equipment, energy, and capital costs make it increasingly more important to evaluate losses of electric equipment (e.g., power or distribution transformers) before making any final decision for purchasing new equipment and/or replacing (or retiring) existing ones. For example, nowadays it is not uncommon to find out that a transformer with lower losses but higher initial price tag is less expensive than the one with higher losses but lower initial price when total cost over the life of the transformer is considered. However, in the replacement or retirement decisions, the associated cost savings in O&M costs in a given life cycle analysis* or life cycle cost study must be greater than the total purchase price of the more efficient replacement transformer. Based on the “sunk cost” concept of engineering economy, the carrying charges of the existing equipment do not affect the retirement decision, regardless of the age of the existing unit. In other words, the fixed, or carrying, charges of an existing equipment must be amortized (written off) whether the unit is retired or not

The transformer cost study should include the following factors: 1. Annual cost of copper losses 2. Annual cost of core losses 3. Annual cost of exciting current 4. Annual cost of regulation 5. Annual cost of fixed charges on the first cost of the installed equipment These annual costs may be different from year to year during the economical lifetime of the equipment. Therefore, it may be required to levelize them, as explained in Section 7.5.4. Read Section 6.7 for further information on the cost study of the

distribution transformers. For the economic replacement study of the power transformers, the following simplified technique may be sufficient. Dodds [10] summarizes the economic evaluation of the cost of losses in an old and a new transformer step by step as given in the following text: 1. Determine the power ratings for the transformers as well as the peak and average system loads. 2. Obtain the load and no-load losses for the transformers under rated conditions. 3. Determine the original cost of the old transformer and the purchase price of the new one. 4. Obtain the carrying charge rate, system capital cost rate, and energy cost rate for your particular utility. 5. Calculate the transformer carrying charge and the cost of losses for each transformer. The cost of losses is equal to the system carrying charge plus the energy charge. 6. Compare the total cost per year for each transformer. The total cost is equal to the sum of the transformer carrying charge and the cost of losses. 7. Compare the total cost per year of the old and new transformers. If the total cost per year of the new transformer is less, replacement of the old transformer can be economically justified.

Application of Capacitors to Distribution Systems

BASIC DEFINITIONS:

Capacitor element: An indivisible part of a capacitor consisting of electrodes separated by a dielectric material

Capacitor unit: An assembly of one or more capacitor elements in a single container with terminals brought out

Capacitor segment: A single-phase group of capacitor units with protection and control system

Capacitor module: A three-phase group of capacitor segments Capacitor bank: a total assembly of capacitor modules electrically connected to each other

POWER CAPACITORS :

At a casual look, a capacitor seems to be a very simple and unsophisticated apparatus, that is, two metal plates separated by a dielectric insulating material. It has no moving parts but instead functions by being acted upon by electric stress. In reality, however, a power capacitor is a highly technical and complex device in that very thin dielectric materials and high electric stresses are involved, coupled with highly sophisticated processing techniques. Figure 8.1 shows a cutaway view of a power factor correction capacitor. Figure 8.2 shows a typical capacitor utilization in a switched pole-top rack. In the past, most power capacitors were constructed with two sheets of pure aluminum foil separated by three or more layers of chemically impregnated kraft paper. Power capacitors have been improved tremendously over the last 30 years or so, partly due to improvements in the dielectric materials and their more efficient utilization and partly due to improvements in the processing techniques involved. Capacitor sizes have increased from the 15–25 kvar range to the 200–300 kvar range (capacitor banks are usually supplied in sizes ranging from 300 to 1800 kvar). Nowadays, power capacitors are much more efficient than those of 30 years ago and are available to the electric utilities at a much lower cost per kilovar. In general, capacitors are getting more attention today than ever before, partly due to a new dimension added in the analysis: changeout economics. Under certain circumstances, even replacement of older capacitors can be justified on the basis of lower-loss evaluations of the modern capacitor design. Capacitor technology has evolved to extremely low-loss designs employing the all-film concept; as a result, the utilities can make economic loss evaluations in choosing between the presently existing capacitor technologies.

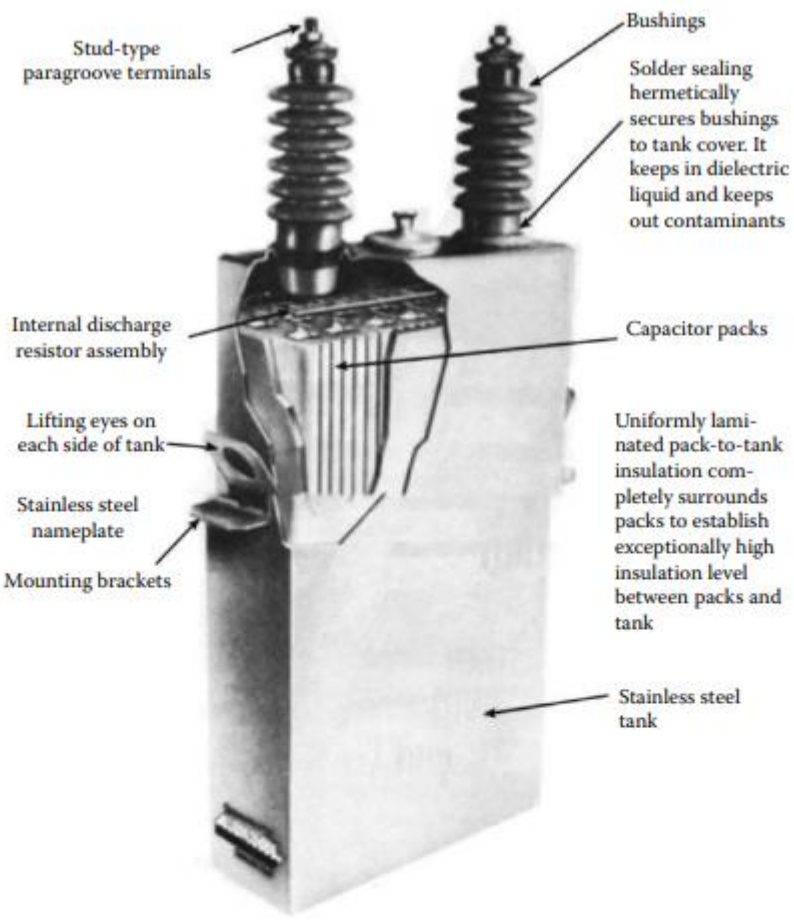

FIGURE 8.1 A cutaway view of a power factor correction capacitor. (From McGraw-Edison Company, *The ABC of Capacitors*, Bulletin R230-90-1, 1968.)

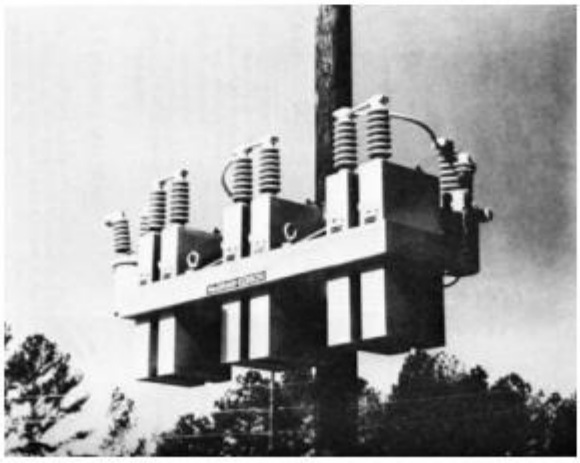

FIGURE 8.2 A typical utilization in a switched pole-top rack.

8.3 EFFECTS OF SERIES AND SHUNT CAPACITORS

As mentioned earlier, the fundamental function of capacitors, whether they are series or shunt, installed as a single unit or as a bank, is to regulate the voltage and reactive power flows at the point where they are installed. The shunt capacitor does it by changing the power factor of the load, whereas the series capacitor does it by directly offsetting the inductive reactance of the circuit to which it is applied.

8.3.1 Series Capacitors

Series capacitors, that is, *capacitors connected in series with lines*, have been used to a very limited extent on distribution circuits due to being a more specialized type of apparatus with a limited range of application. Also, because of the special problems associated with each application, there is a requirement for a large amount of complex engineering investigation. Therefore, in general, utilities are reluctant to install series capacitors, especially of small sizes.

As shown in Figure 8.3, a series capacitor compensates for inductive reactance. In other words, a series capacitor is a negative (capacitive) reactance in series with the circuit's positive (inductive) reactance with the effect of compensating for part or all of it. Therefore, the primary effect of the series capacitor is to minimize, or even suppress, the voltage drop caused by the inductive reactance in the circuit.

At times, a series capacitor can even be considered as a voltage regulator that provides for a voltage boost that is proportional to the magnitude and power factor of the through current. Therefore, a series capacitor provides for a voltage rise that increases automatically and instantaneously as the load grows.

Also, a series capacitor produces more net voltage rise than a shunt capacitor at lower power factors, which creates more voltage drop. However, a series capacitor betters the system power factor much less than a shunt capacitor and has little effect on the source current.

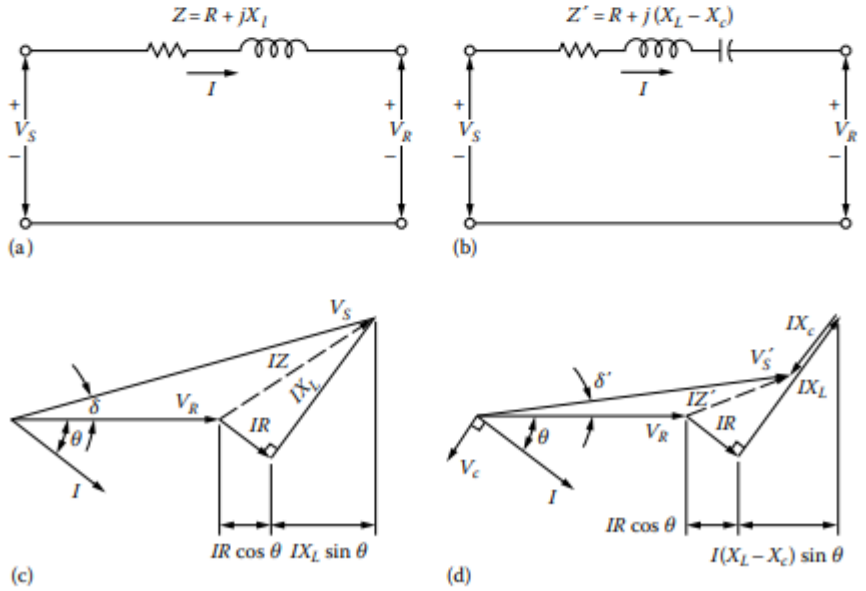

FIGURE 8.3 Voltage phasor diagrams for a feeder circuit of lagging power factor: (a) and (c) without and (b) and (d) with series capacitors.

Consider the feeder circuit and its voltage phasor diagram as shown in Figure 8.3a and c. The voltage drop through the feeder can be expressed approximately as

$$\text{VD} = IR\cos\theta + IX_L\sin\theta \tag{8.1}$$

where

R is the resistance of the feeder circuit
X_L is the inductive reactance of the feeder circuit
$\cos\theta$ is the receiving-end power factor
$\sin\theta$ is the sine of the receiving-end power factor angle

As can be observed from the phasor diagram, the magnitude of the second term in Equation 8.1 is much larger than the first. The difference gets to be much larger when the power factor is smaller and the ratio of R/X_L is small.

However, when a series capacitor is applied, as shown in Figure 8.3b and d, the resultant lower voltage drop can be calculated as

$$\text{VD} = IR\cos\theta + I(X_L - X_c)\sin\theta \tag{8.2}$$

where X_c is the capacitive reactance of the series capacitor.

8.3.1.1 Overcompensation

Usually, the series-capacitor size is selected for a distribution feeder application in such a way that the resultant capacitive reactance is smaller than the inductive reactance of the feeder circuit. However, in certain applications (where the resistance of the feeder circuit is larger than its inductive reactance), the reverse might be preferred so that the resultant voltage drop is

$$\text{VD} = IR\cos\theta - I(X_c - X_L)\sin\theta \tag{8.3}$$

The resultant condition is known as *overcompensation*. Figure 8.4a shows a voltage phasor diagram for overcompensation at normal load. At times, when the selected level of overcompensation is strictly based on normal load, the resultant overcompensation of the receiving-end voltage may not be pleasing at all because the lagging current of a large motor at start can produce an extraordinarily large voltage rise, as shown in Figure 8.4b, which is especially harmful to lights (shortening their lives) and causes light flicker, resulting in consumers' complaints.

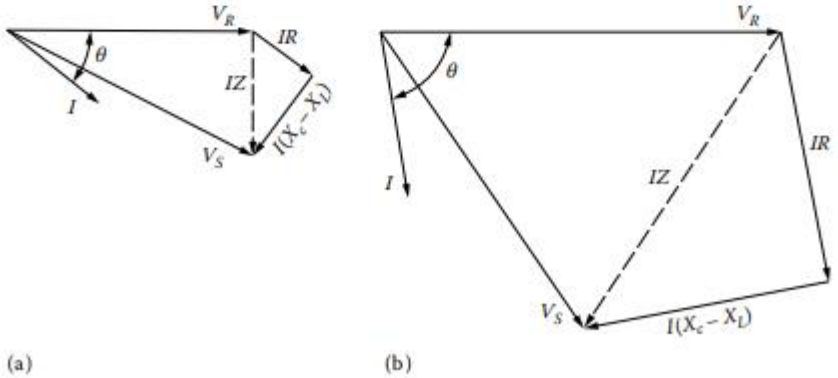

(a) (b)

FIGURE 8.4 Overcompensation of the receiving-end voltage: (a) at normal load and (b) at the start of a large motor.

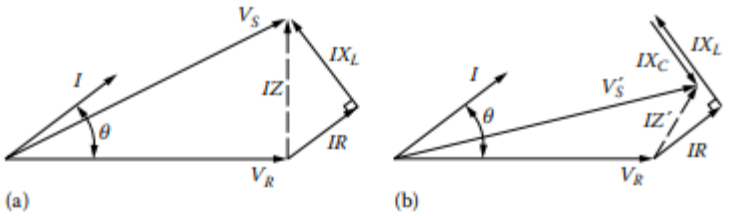

FIGURE 8.5 Voltage phasor diagram with leading power factor: (a) without series capacitors and (b) with series capacitors.

8.3.1.2 Leading Power Factor

To decrease the voltage drop considerably between the sending and receiving ends by the application of a series capacitor, the load current must have a lagging power factor. As an example, Figure 8.5a shows a voltage phasor diagram with a leading-load power factor without having series capacitors in the line. Figure 8.5b shows the resultant voltage phasor diagram with the same leading-load power factor but this time with series capacitors in the line. As can be seen from the figure, the receiving-end voltage is reduced as a result of having series capacitors.

When $\cos\theta = 1.0$, $\sin\theta \cong 0$, and therefore,

$$I(X_L - X_c)\sin\theta \cong 0$$

hence, Equation 8.2 becomes

$$\text{VD} \cong IR \tag{8.4}$$

Thus, in such applications, series capacitors practically have no value.

Because of the aforementioned reasons and others (e.g., ferroresonance in transformers, subsynchronous resonance during motor starting, shunting of motors during normal operation, and difficulty in protection of capacitors from system fault current), series capacitors do not have large applications in distribution systems.

However, they are employed in subtransmission systems to modify the load division between parallel lines. For example, often a new subtransmission line with larger thermal capability is parallel with an already existing line. It may be very difficult, if not impossible, to load the subtransmission line without overloading the old line. Here, series capacitors can be employed to offset some of the line reactance with greater thermal capability. They are also employed in subtransmission systems to decrease the voltage regulation.

8.3.2 Shunt Capacitors

Shunt capacitors, that is, *capacitors connected in parallel with lines*, are used extensively in distribution systems. Shunt capacitors supply the type of reactive power or current to counteract the out-of-phase component of current required by an inductive load. In a sense, shunt capacitors modify the characteristic of an inductive load by drawing a leading current that counteracts some or all of the lagging component of the inductive load current at the point of installation. Therefore, a shunt capacitor has the same effect as an overexcited synchronous condenser, generator, or motor.

As shown in Figure 8.6, by the application of shunt capacitor to a feeder, the magnitude of the source current can be reduced, the power factor can be improved, and consequently the voltage drop between the sending end and the load is also reduced. However, shunt capacitors do not affect current or power factor beyond their point of application. Figure 8.6a and c shows the single-line diagram of a line and its voltage phasor diagram before the addition of the shunt capacitor, and Figure 8.6b and d shows them after the addition.

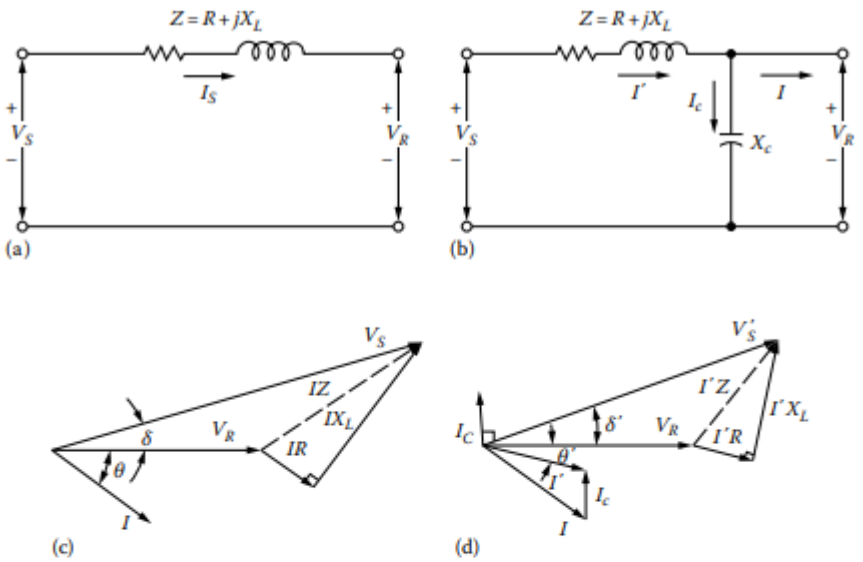

FIGURE 8.6 Voltage phasor diagrams for a feeder circuit of lagging power factor: (a) and (c) without and (b) and (d) with shunt capacitors.

Voltage drop in feeders, or in short transmission lines, with lagging power factor can be approximated as

$$\text{VD} = I_R R + I_X X_L \tag{8.5}$$

where

R is the total resistance of the feeder circuit, Ω

X_L is the total inductive reactance of the feeder circuit, Ω

I_R is the real power (or in-phase) component of the current, A

I_X is the reactive (or out-of-phase) component of the current lagging the voltage by 90°, A

PROBLEMS:

Example 8.1

Consider the right-angle triangle shown in Figure 8.7b. Determine the power factor of the load on a 460 V three-phase system, if the ammeter reads 100 A and the wattmeter reads 70 kW.

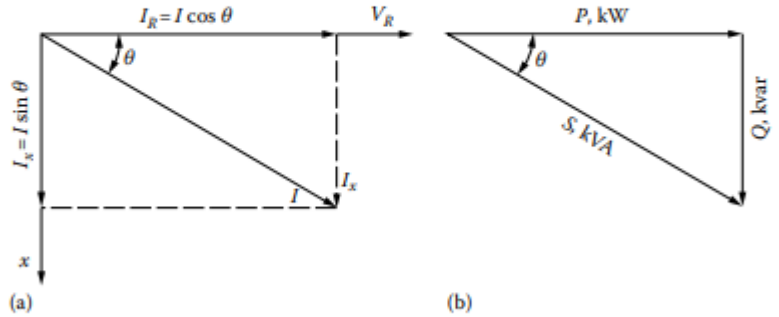

FIGURE 8.7 (a) Phasor diagram and (b) power triangle for a typical distribution load.

Solution

$$S = \frac{\sqrt{3}(V)(I)}{1000}$$

$$= \frac{\sqrt{3}(460\text{ V})(100\text{ A})}{1000}$$

$$\cong 79.67\text{ kVA}$$

Thus,

$$\text{PF} = \cos\theta = \frac{P}{S}$$

$$= \frac{70\text{ kW}}{79.67\text{ kVA}}$$

$$\cong 0.88 \quad \text{or} \quad 88\%$$

When a capacitor is installed at the receiving end of the line, as shown in Figure 8.6b, the resultant voltage drop can be calculated approximately as

$$\text{VD} = I_R R_R + I_X X_L - I_c X_L \tag{8.6}$$

where I_c is the reactive (or out-of-phase) component of current leading the voltage by 90°, A.

The difference between the voltage drops calculated by using Equations 8.5 and 8.6 is the voltage rise due to the installation of the capacitor and can be expressed as

$$\text{VR} = I_c X_L \tag{8.7}$$

POWER FACTOR CORRECTION :

GENERAL:

A typical utility system would have a reactive load at 80% power factor during the summer months. Therefore, in typical distribution loads, the current lags the voltage, as shown in Figure 8.7a. The cosine of the angle between current and sending voltage is known as the power factor of the circuit. If the in-phase and out-of-phase components of the current I are multiplied by the receiving-end voltage VR , the resultant relationship can be shown on a triangle known as the power triangle, as shown in Figure 8.7b. Figure 8.7b shows the triangular relationship that exists between kilowatts, kilovoltamperes, and kilovars. Note that, by adding the capacitors, the reactive power component Q of the apparent power S of the load can be reduced or totally suppressed. Figures 8.8a and 8.9 illustrate how the reactive power component Q increases with each 10% change of power factor. Figure 8.8a also illustrates how a portion of lagging reactive power Qold is cancelled by the leading reactive power of capacitor Qc . Note that, as illustrated in Figure 8.8, even an 80% power factor of the reactive power (kilovar) size is quite large, causing a 25% increase in the total apparent power (kilovoltamperes) of the line. At this power factor, 75 kvar of capacitors is needed to cancel out the 75 kvar of the lagging component. As previously mentioned, the generation of reactive power at a power plant and its supply to a load located at a far distance is not economically feasible, but it can easily be provided by capacitors (or overexcited synchronous motors) located at the load centers. Figure 8.10 illustrates the power factor correction for a given system. As illustrated in the figure, capacitors draw leading reactive

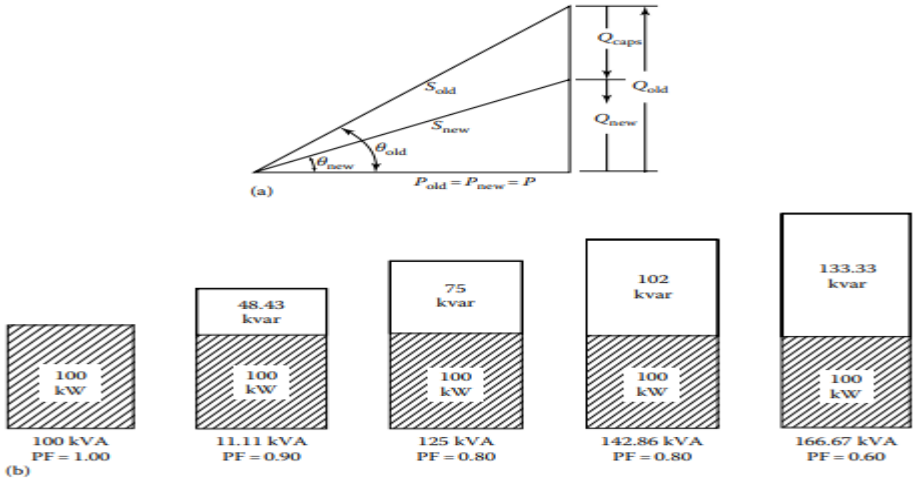

FIGURE 8.8 Illustration of (a) the use of a power triangle for power factor correction by employing capacitive reactive power and (b) the required increase in the apparent and reactive powers as a function of the load power factor, holding the real power of the load constant.

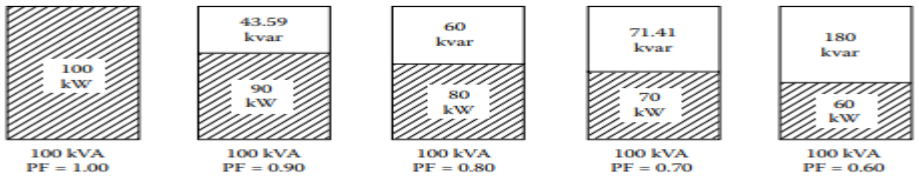

FIGURE 8.9 Illustration of the change in the real and reactive powers as a function of the load power factor, holding the apparent power of the load constant.

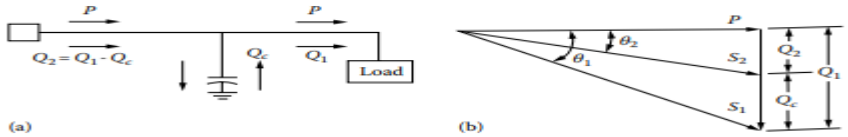

FIGURE 8.10 Illustration of power factor correction.

power from the source; that is, they supply lagging reactive power to the load. Assume that a load is supplied with a real power P, lagging reactive power Q_1, and apparent power S_1 at a lagging power factor of

$$\cos\theta_1 = \frac{P}{S_1}$$

or

$$\cos\theta_1 = \frac{P}{\left(P^2 + Q_1^2\right)^{1/2}} \tag{8.8}$$

When a shunt capacitor of Q_c kVA is installed at the load, the power factor can be improved from $\cos\theta_1$ to $\cos\theta_2$, where

$$\cos\theta_2 = \frac{P}{S_2}$$

$$= \frac{P}{\left(P^2 + Q_2^2\right)^{1/2}}$$

or

$$\cos\theta_2 = \frac{P}{\left[P^2 + (Q_1 - Q_c)^2\right]^{1/2}} \tag{8.9}$$

TABLE 8.1
Power Factor of Load and Source

	At Load			At Generator		
Load Type	***P***	***Q***	**Power Factor[a]**	***P***	***Q***	**Power Factor[b]**
Induction motor	In	Out	Lagging			
Induction generator				Out	Out	Lagging
Synchronous motor (Underexcited)	In	In	Lagging	Out	Out	Lagging
Synchronous motor (Overexcited)	In	Out	Leading	Out	In	Leading

[a] Power factor measured at the load.

[b] Power factor measured at the generator.

ECONOMIC POWER FACTOR :

As can be observed from Figure 8.10b, the apparent power and the reactive power are decreased from S1 to S2 kVA and from Q1 to Q2 kvar (by providing a reactive power of Q), respectively. The reduction of reactive current results in a reduced total current, which in turn causes less power losses.

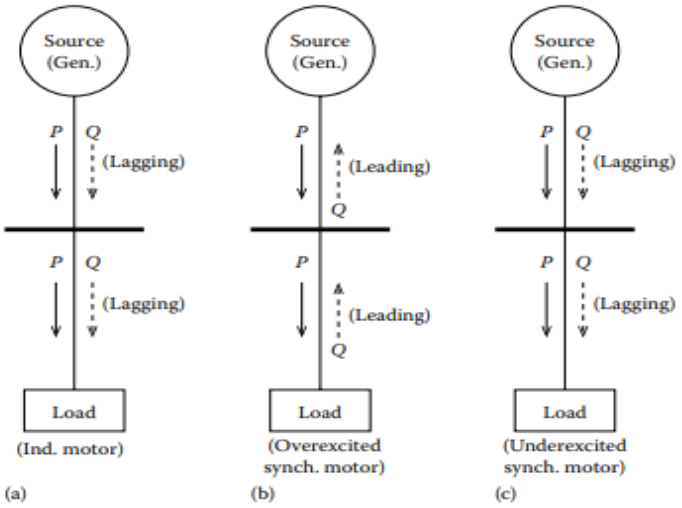

FIGURE 8.11 Examples of some of the sources of leading and lagging reactive power at the load.

Thus, the power factor correction produces economic savings in capital expenditures and fuel expenses through a release of kilovoltamperage capacity and reduction of power losses in all the apparatus between the point of installation of the capacitors and the power plant source, including distribution lines, substation transformers, and transmission lines. The economic power factor is the point at which the economic benefits of adding shunt capacitors just equal the cost of the capacitors. In the past, this economic power factor was around 95%. Today's high plant and fuel costs have pushed the economic power factor toward unity. However, as the corrected power factor moves nearer to unity, the effectiveness of capacitors in improving the power factor, decreasing the line kilovoltamperes transmitted, increasing the load capacity, or reducing line copper losses by decreasing the line current sharply decreases. Therefore, the correction of power factor to unity becomes more expensive with regard to the marginal cost of capacitors installed.

USE OF A POWER FACTOR CORRECTION TABLE :

Table 8.2 is a power factor correction table to simplify the calculations involved in determining the capacitor size necessary to improve the power factor of a given load from original to desired value. It gives a multiplier to determine the kvar requirement. It is based on the following formula:

$$Q = P(\tan\theta_{\text{orig}} - \tan\theta_{\text{new}}) \tag{8.10}$$

or

$$Q = P\left(\sqrt{\frac{1}{\text{PF}_{\text{orig}}^2} - 1} - \sqrt{\frac{1}{\text{PF}_{\text{new}}^2} - 1}\right) \tag{8.11}$$

where

Q is the required compensation in kvar
P is the real power kW
PF_{orig} is the original power factor
PF_{new} is the desired power factor

Example 8.2

Assume that a substation supplies three different kinds of loads, mainly, incandescent lights, induction motors, and synchronous motors, as shown in Figure 8.12. The substation power factor is found from the total reactive and real powers of the various loads that are connected. Based on the given data in Figure 8.12, determine the following:

a. The apparent, real, and kvars of each load
b. The total apparent, real, and reactive powers of the power that should be supplied by the substation
c. The total power factor of the substation

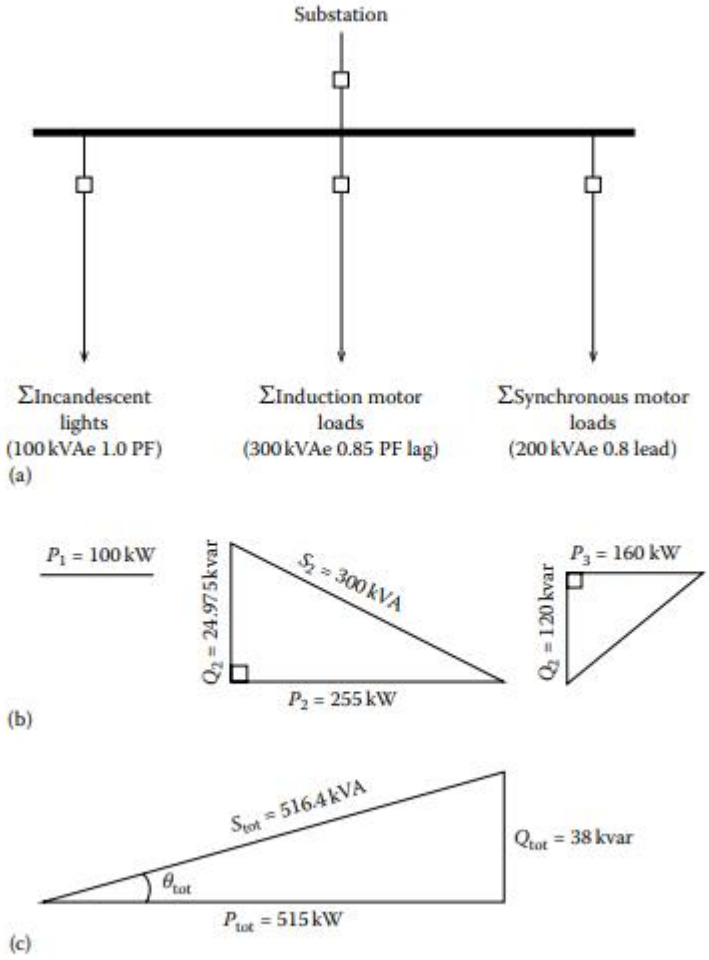

FIGURE 8.12 For Example 8.2: (a) connection diagram, (b) phasor diagrams of individual loads, and (c) phasor diagram of combined loads.

Solution

a.

1. *For a 100 kVA lighting load*
   Since incandescent lights are basically a unity power factor load, it is assumed that all the current is kilowatt current. Hence,

$$S_1 = P_1$$

$$100 \text{ kVA} \cong 100 \text{ kW}$$

2. *For 400 hp of connected induction motor loads*
   Assume that for the motor loads,

$$\text{kVA load} = 0.75 \times (\text{Connected motor horse power})$$

   with an opening power factor of 85% lagging:

$$S_2 = \left(0.75 \frac{\text{kW}}{\text{hp}}\right)(400 \text{ hp}) = 300 \text{ kVA}$$

$$P_3 = (0.75 \times 400) \times 0.85 = 255 \text{ kW}$$

$$\begin{aligned} Q_2 &= \sqrt{(300)^2 - (255)^2} \\ &= \sqrt{90,000 - 65,025} \\ &= 24,975 \\ &\cong 158 \text{ kvar} \end{aligned}$$

3. *200 hp motor with a 0.8 leading power factor*
   At full load, assume kVA = motor-hp rating = 200 kVA:

$$\begin{aligned} P_3 &= (200 \text{ kVA}) \cos\theta \\ &= 200 \times 0.8 \\ &= 160 \text{ kW} \end{aligned}$$

$$\begin{aligned} Q_2 &= \sqrt{(200 \text{ kVA})^2 - (160 \text{ kW})^2} \\ &= \sqrt{40,000 - 25,600} \\ &= \sqrt{14,400} \\ &= 120 \text{ kvar} \end{aligned}$$

b. At the substation, the total real power is

$$\begin{aligned} P_{\text{total}} &= P_{\text{lights}} + P_{\text{ind.mot.}} + P_{\text{sync.mot.}} \\ &= 100 + 255 + 160 \\ &= 515 \text{ kW} \end{aligned}$$

The total reactive power is

$$\begin{aligned} Q_{\text{total}} &= Q_{\text{lights}} + Q_{\text{ind. mot.}} \\ &= 0 + 158 \\ &= 158 \text{ kvar} \end{aligned}$$

Thus, an overexcited synchronous motor operating without the mechanical load connected to its shaft can supply the leading reactive power. Hence, the net lagging reactive power that must be supplied by the substation is the difference between the reactive power supplied by the synchronous motor and the reactive power required by the induction motor loads:

Induction motor load required = 158 kvar
Synchronous motor supplied = 120 kvar
Substation must supply = 38 kvar

c. The kVA of the substation is

$$S_{\text{total}} = \sqrt{P_{\text{tot}}^2 + Q_{\text{tot}}^2} \tag{8.12}$$

or

$$S_{\text{total}} = \sqrt{515^2 + 38^2}$$
$$= \sqrt{266{,}669}$$
$$= 516.4\ \text{kVA}$$

The power factor of the substation is

$$\text{PF} = \text{power factor} = \frac{P}{S}$$
$$= \frac{515\ \text{kW}}{516.4\ \text{kVA}}$$
$$= 0.997\ \text{lagging}$$

PRACTICAL METHODS USED By THE POWER INDUSTRY FOR POWER FACTOR IMPROVEMENT CALCULATIONS

It is often that the formulas that are used by the power industry contains kW, kVA, or kvar instead of the symbols of *P*, *S*, *Q*, which are the correct form and used in the academia. However, there are certain advantages of using them since one does not have to think which one is *P*, *S*, or *Q*.

From the right-triangle relationship, several simple and useful mathematical expressions may be written as

$$\text{PF} = \cos\theta = \frac{\text{kW}}{\text{kVA}} \tag{8.13}$$

$$\tan\theta = \frac{\text{kvar}}{\text{kW}} \tag{8.14}$$

$$\sin\theta = \frac{\text{kvar}}{\text{kVA}} \tag{8.15}$$

Since the kW component normally stays the same (the kVA and kvar components change with power factor), it is convenient to use Equation 8.11 involving the kW component. The relationship can be reexpressed as

$$\text{kvar} = \text{kW} \times \tan\theta \tag{8.16}$$

For instance, if it is necessary to determine the capacitor rating to improve the load's power factor, one would use the following relationships:

$$\text{kvar at original PF} = \text{kW} \times \tan\theta_1 \tag{8.17}$$

$$\text{kvar at improved PF} = \text{kW} \times \tan\theta_2 \tag{8.18}$$

Thus, the capacitor rating required to improve the power factor can be expressed as

$$\text{ckvar}^* = \text{kW} \times (\tan\theta_1 - \tan\theta_2) \tag{8.19}$$

or

$$\Delta \tan\theta = \tan\theta_1 - \tan\theta_2 \tag{8.20}$$

then

$$\text{ckvar}^* = \text{kW} \times \Delta \tan\theta \tag{8.21}$$

Table 8.2 has a "kW multiplier" for determining the capacitor based on the previously mentioned expression. Also, note that the prefix "c" in ckvar is employed to designate the capacitor kvar in order to differentiate it from load kvar.

To find irrespective currents of kVA, kW, and kvar, use the following relationships:

$$\text{kVA} = \sqrt{(\text{kW})^2 + (\text{kvar})^2} \tag{8.22}$$

$$\text{kW} = \sqrt{(\text{kVA})^2 - (\text{kvar})^2} \tag{8.23}$$

$$\text{kvar} = \sqrt{(\text{kVA})^2 - (\text{kW})^2} \tag{8.24}$$

REAL POWER-LIMITED EqUIPMENT :

Certain equipments such as turbogenerator (i.e., turbine generators) and engine generator sets have a real power (P) limit of the prime mover as well as a kVA limit of the generator. Usually the real power limit corresponds to the generator S rating, and the set is rated at that P value at unity power factor operation. Other real power (P) values that correspond to the lesser power factor operations are determined by the power factor and real power (S) rating at the generator in order that the P and S ratings of the load do not exceed the S rating of the generator. Any improvement of the power factor can release both P and S capacities.

Example 8.7

Assume that a 1000 kW turbine unit (turbogenerator set) has a turbine capability of 1250 kW. It is operating at a rated load of 1250 kVA at 0.85 power factor. An additional load of 150 kW at 0.85 power factor is to be added. Determine the value of capacitors needed in order not to overload the turbine nor the generator.

Solution

Original load

$$P = 1000\ \text{kW}$$

$$Q = \sqrt{(\text{kVA})^2 - (\text{kW})^2}$$

$$= \sqrt{(1250)^2 - (1000)^2}$$

$$= 750\ \text{kvar}$$

Additional load

$$P = \text{kW} = 150\ \text{kW}$$

$$S = \text{kVA}$$

$$= \frac{150\ \text{kW}}{0.85}$$

$$= 200\ \text{kVA}$$

$$Q = \sqrt{(200)^2 - (1000)^2}$$

$$= 132.29\ \text{kvar}$$

Total load

$$P_{\text{tot}} = \text{kW} = 1000 + 150$$

$$= 1150\ \text{kW}$$

$$Q_{\text{tot}} = 750 + 132.29$$

$$= 882.29\ \text{kvar}$$

The minimum operating power factor for a load of 1150 kW and not exceeding the kVA rating of the generator is

$$\text{PF} = \cos\theta = \frac{1150\ \text{kW}}{1250\ \text{kVA}}$$

$$= 0.92$$

The maximum load kvar for this situation is

$$Q = (1150\ \text{kW}) \tan^{-1}\theta$$

$$= 1150 \times \tan^{-1}(23.073918°)$$

$$\cong 489.9\ \text{kvar}$$

where 0.426 is the tangent corresponding to the maximum power factor of 0.935.

Thus, the capacitors must provide the difference between the total load kvar and the permissible generator kvar, or

$$\text{ckvar} = 882.29 - 489.9$$

$$= 392.39\ \text{kvar}$$

COMPUTERIZED METHOD TO DETERMINE THE ECONOMIC POWER FACTOR :

As suggested by Hopkinson [1], a load flow digital computer program can be employed to determine the kilovoltamperes, kilovolts, and kilovars at annual peak level for the whole system (from generation through the distribution substation buses) as the power factor is varied.

As a start, shunt capacitors are applied to each substation bus for correcting to an initial power factor, for example, 90%. Then, a load flow run is performed to determine the total system kilovoltamperes, and kilowatt losses (from generator to load) at this level and capacitor kilovars are noted. Later, additional capacitors are applied to each substation bus to increase the power factor by 1%, and another load flow run is made. This process of iteration is repeated until the power factor becomes unity.

As a final step, the benefits and costs are calculated at each power factor. The economic power factor is determined as the value at which benefits and costs are equal. After determining the economic power factor, the additional capacitor size required can be calculated as

$$\Delta Q_c = P_{PK}(\tan\phi - \tan\theta) \tag{8.28}$$

where

ΔQ_c is the required capacitor size, kvar
P_{PK} is the system demand at annual peak, kW
$\tan\phi$ is the tangent of original power factor angle
$\tan\theta$ is the tangent of economic power factor angle

PROBLEMS:

Example 8.9

Assume that a three-phase 500 hp 60 Hz 4160 V wye-connected induction motor has a full-load efficiency (η) of 88% and a lagging power factor of 0.75 and is connected to a feeder. If it is desired to correct the power factor of the load to a lagging power factor of 0.9 by connecting three capacitors at the load, determine the following:

a. The rating of the capacitor bank, in kilovars
b. The capacitance of each unit if the capacitors are connected in delta, in microfarads
c. The capacitance of each unit if the capacitors are connected in wye, in microfarads

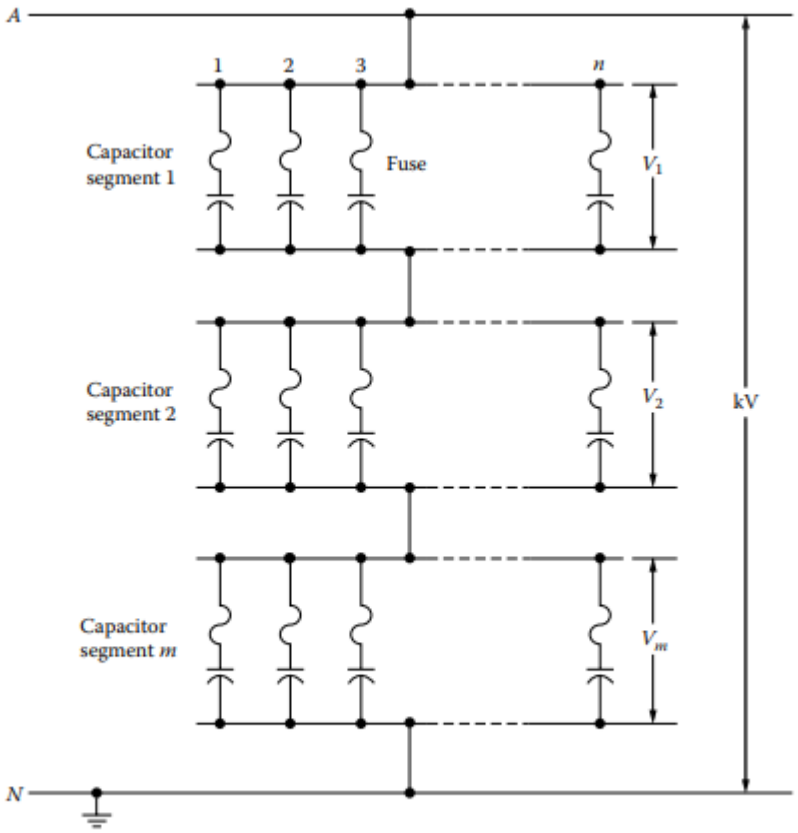

FIGURE 8.15 Connection of capacitor units for one phase of a three-phase wye-connected bank.

Solution

a. The input power of the induction motor can be found as

$$P = \frac{(\text{HP})(0.7457\ \text{kW/hp})}{\eta}$$

$$= \frac{(500\ \text{hp})(0.7457\ \text{kW/hp})}{0.88}$$

$$= 423.69\ \text{kW}$$

The reactive power of the motor at the uncorrected power factor is

$$Q_1 = P \tan \theta_1$$

$$= 423.69 \tan(\cos^{-1} 0.75)$$

$$= 423.69 \times 0.8819$$

$$= 373.7\ \text{kvar}$$

The reactive power of the motor at the corrected power factor is

$$Q_2 = P \tan \theta_2$$

$$= 423.69 \tan (\cos^{-1} 0.90)$$

$$= 423.69 \times 0.4843$$

$$= 205.2\ \text{kvar}$$

Therefore, the reactive power provided by the capacitor bank is

$$Q_c = Q_1 - Q_2$$

$$= 373.7 - 205.2$$

$$= 168.5\ \text{kvar}$$

Hence, assuming the losses in the capacitors are negligible, the rating of the capacitor bank is 168.5 kvar.

b. If the capacitors are connected in delta as shown in Figure 8.17a, the line current is

$$I_L = \frac{Q_c}{\sqrt{3} \times V_{L-L}}$$

$$= \frac{168.5}{\sqrt{3} \times 4.16}$$

$$= 23.39\ \text{A}$$

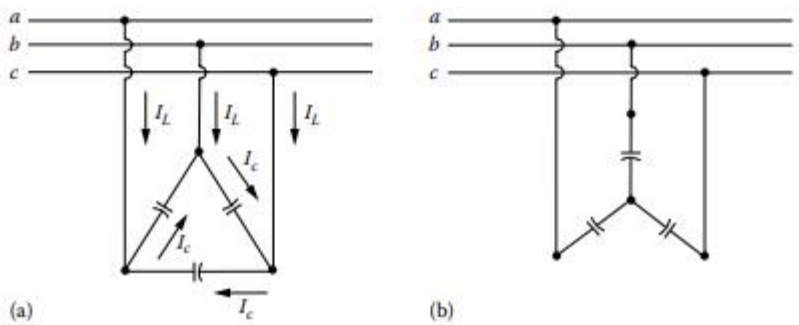

FIGURE 8.17 Capacitor connected (a) in delta and (b) in wye.

and therefore,

$$I_c = \frac{I_L}{\sqrt{3}}$$
$$= \frac{23.39}{\sqrt{3}}$$
$$= 13.5\ \text{A}$$

Thus, the reactance of each capacitor is

$$X_c = \frac{V_{L-L}}{I_c}$$
$$= \frac{4160}{13.5}$$
$$= 308.11\,\Omega$$

and hence, the capacitance of each unit,* if the capacitors are connected in delta, is

$$C = \frac{10^6}{\omega X_c}\,\mu\text{F}$$

or

$$C = \frac{10^6}{\omega X_c}$$
$$= \frac{10^6}{2\pi \times 60 \times 308.11}$$
$$= 8.61\,\mu\text{F}$$

c. If the capacitors are connected in wye as shown in Figure 8.17b,

$$I_c = I_L = 23.39\,\text{A}$$

and therefore,

$$X_c = \frac{V_{L-N}}{I_c}$$
$$= \frac{4160}{\sqrt{3} \times 23.39}$$
$$= 102.70\ \Omega$$

Thus, the capacitance of each unit, if the capacitors are connected in wye, is

$$C = \frac{10^6}{\omega X_c}$$
$$= \frac{10^6}{2\pi \times 60 \times 102.70}$$
$$= 25.82\,\mu\text{F}$$

Example 8.10

Assume that a 2.4 kV single-phase circuit feeds a load of 360 kW (measured by a wattmeter) at a lagging load factor and the load current is 200 A. If it is desired to improve the power factor, determine the following:

a. The uncorrected power factor and reactive load.
b. The new corrected power factor after installing a shunt capacitor unit with a rating of 300 kvar.
c. Also write the necessary codes to solve the problem in MATLAB®.

Solution

a. Before the power factor correction,

$$S_1 = V \times I$$
$$= 2.4 \times 200$$
$$= 480 \text{ kVA}$$

therefore, the uncorrected power factor can be found as

$$\cos\theta_1 = \frac{P}{S_1}$$
$$= \frac{360 \text{ kW}}{480 \text{ kVA}}$$
$$= 0.75$$

and the reactive load is

$$Q_1 = S_1 \times \sin(\cos^{-1}\theta_1)$$
$$= 480 \times 0.661$$
$$= 317.5 \text{ kvar}$$

b. After the installation of the 300 kvar capacitors,

$$Q_2 = Q_1 - Q_c$$
$$= 317.5 - 300$$
$$= 17.5 \text{ kvar}$$

and therefore, the new power factor can be found from Equation 8.9 as

$$\cos\theta_2 = \frac{P}{[P^2 + (Q_1 - Q_c)^2]^{1/2}}$$
$$= \frac{360}{(360^2 + 17.5^2)^{1/2}}$$
$$= 0.9989 \quad \text{or} \quad 99.89\%$$

Example 8.11

Assume that the Riverside Substation of the NL&NP Company has a bank of three 2000 kVA transformers that supplies a peak load of 7800 kVA at a lagging power factor of 0.89. All three transformers have a thermal capability of 120% of the nameplate rating. It has already been planned to install 1000 kvar of shunt capacitors on the feeder to improve the voltage regulation.

Determine the following:

a. Whether or not to install additional capacitors on the feeder to decrease the load to the thermal capability of the transformer
b. The rating of the additional capacitors

Solution

a. Before the installation of the 1000 kvar capacitors,

$$P = S_1 \times \cos\theta$$
$$= 7800 \times 0.89$$
$$= 6942 \text{ kW}$$

and

$$Q_1 = S_1 \times \sin\theta$$
$$= 7800 \times 0.456$$
$$= 3556.8 \text{ kvar}$$

Therefore, after the installation of the 1000 kvar capacitors,

$$Q_2 = Q_1 - Q_c$$
$$= 3556.8 - 1000$$
$$= 2556.8 \text{ kvar}$$

and using Equation 8.9,

$$\cos\theta_2 = \frac{P}{[P^2 + (Q_1 - Q_c)^2]^{1/2}}$$
$$= \frac{6942}{(6942^2 + 2556.8^2)^{1/2}}$$
$$= 0.938 \quad \text{or} \quad 93.8\%$$

and the corrected apparent power is

$$S_2 = \frac{P}{\cos\theta_2}$$
$$= \frac{6942}{0.938}$$
$$= 7397.9 \text{ kVA}$$

On the other hand, the transformer capability is

$$S_T = 6000 \times 1.20$$
$$= 7200 \text{ kVA}$$

Therefore, the capacitors installed to improve the voltage regulation are not adequate; additional capacitor installation is required.

b. The new or corrected power factor required can be found as

$$\begin{aligned} \text{PF}_{2,new} = \cos\theta_{2,new} &= \frac{P}{S_T} \\ &= \frac{6942}{7200} \\ &= 0.9642 \quad \text{or} \quad 96.42\% \end{aligned}$$

and thus, the new required reactive power can be found as

$$\begin{aligned} Q_{2,new} &= P \times \tan\theta_{2,new} \\ &= P \times \tan(\cos^{-1}\text{PF}_{2,new}) \\ &= 6942 \times 0.2752 \\ &= 1910 \text{ kvar} \end{aligned}$$

Therefore, the rating of the additional capacitors required is

$$\begin{aligned} Q_{c,add} &= Q_2 - Q_{2,new} \\ &= 2556.8 - 1910 \\ &= 646.7 \text{ kvar} \end{aligned}$$

Example 8.12

If a power system has 10,000 kVA capacity and is operating at a power factor of 0.7 and the cost of a synchronous capacitor (i.e., synchronous condenser) to correct the power factor is $10 per kVA, find the investment required to correct the power factor to

a. 0.85 lagging power factor
b. Unity power factor

Solution

At original cost

$$\theta_{old} = \cos^{-1}\text{PF} = \cos^{-1}0.7 = 45.57°$$

$$P_{old} = S\cos\theta_{old} = (10{,}000 \text{ kVA})0.7 = 7{,}000 \text{ kW}$$

$$Q_{old} = S\sin\theta_{old} = (10{,}000 \text{ kVA})\sin 45.57° = 7{,}141.43 \text{ kvar}$$

a. *For PF = 0.85 lagging*

$$P_{new} = P_{old} = 7000 \text{ kW} \quad (\text{as before})$$

$$S_{new} = \frac{P_{new}}{\cos\theta_{new}} = \frac{7000 \text{ kW}}{0.85} = 8235.29 \text{ kVA}$$

$$Q_{new} = S_{new}\sin(\cos^{-1}\text{PF}) = (8235.29 \text{ kVA})\sin(\cos^{-1}0.85) = 4338.21 \text{ kvar}$$

$$Q_c = Q_{required} = Q_{old} - Q_{new} = 7141.43 - 4338.21 = 2803.22 \text{ kvar correction needed}$$

Hence, the *theoretical* cost of the synchronous capacitor is

$$\text{Cost}_{\text{capacitor}} = (2{,}803.22\ \text{kVA})\left(\frac{\$10}{\text{kVA}}\right) = \$28{,}032.20$$

Note that it is customary to give the cost of capacitors in dollars per kVA rather than in dollars per kvar.

b. *For PF = 1.0*

$$Q_c = Q_{\text{required}} = Q_{\text{old}} - Q_{\text{new}} = 7141.43 - 0.0 = 7141.43\ \text{kvar}$$

Thus, the *theoretical* cost of the synchronous capacitor is

$$\text{Cost}_{\text{capacitor}} = (7{,}141.43\ \text{kVA})\left(\frac{\$10}{\text{kVA}}\right) = \$71{,}414.30$$

Note that $P_{\text{new}} = 7000$ kW is the same as before.

CAPACITOR INSTALLATION TyPES :

In general, capacitors installed on feeders are pole-top banks with necessary group fusing. The fusing applications restrict the size of the bank that can be used. Therefore, the maximum sizes used are about 1800 kvar at 15 kV and 3600 kvar at higher voltage levels. Usually, utilities do not install more than four capacitor banks (of equal sizes) on each feeder

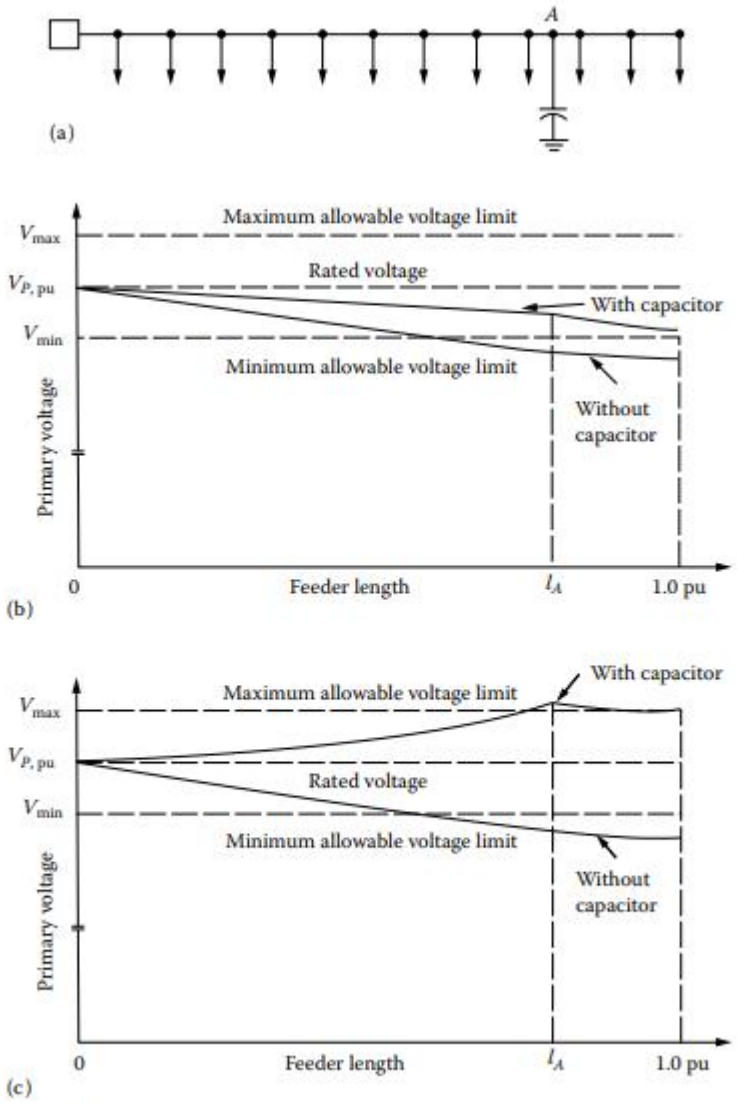

FIGURE 8.18 The effects of a fixed capacitor on the voltage profile of (a) feeder with uniformly distributed load (b) at heavy load and (c) at light load.

Figure 8.18 illustrates the effects of a fixed capacitor on the voltage profiles of a feeder with uniformly distributed load at heavy load and light load. If only fixed-type capacitors are installed, as can be observed in Figure 8.18c, the utility will experience an excessive leading power factor and voltage rise at that feeder. Therefore, as shown in Figure 8.19, some of the capacitors are installed as *switched capacitor banks* so they can be switched off *during light-load conditions.*

Thus, the *fixed capacitors* are sized for light load and connected permanently. As shown in the figure, the switched capacitors can be switched as a block or in several consecutive steps as the reactive load becomes greater from light-load level to peak load and sized accordingly.

However, in practice, the number of steps or blocks is selected to be much less than the ones shown in the figure due to the additional expenses involved in the installation of the required switchgear and control equipment.

A system survey is required in choosing the type of capacitor installation. As a result of load flow program runs or manual load studies on feeders or distribution substations, the system's

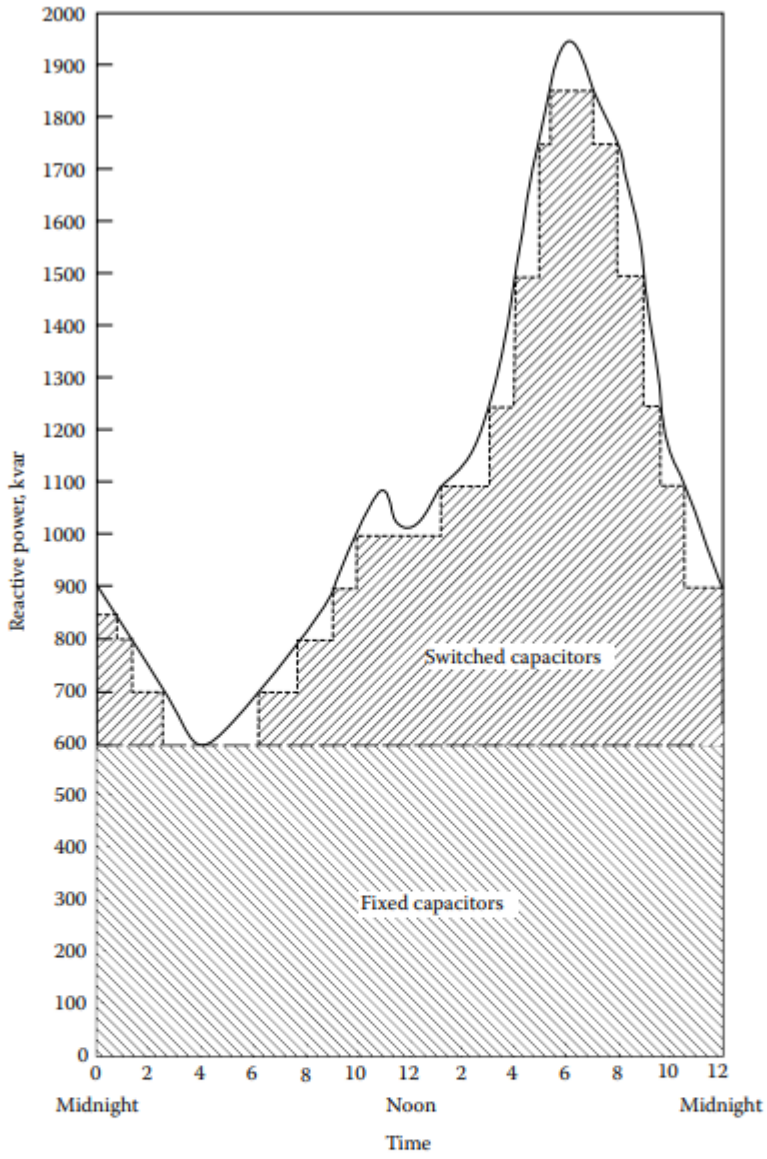

FIGURE 8.19 Sizing of the fixed and switched capacitors to meet the daily reactive power demands.

lagging reactive loads (i.e., power demands) can be determined and the results can be plotted on a curve as shown in Figure 8.19. This curve is called the *reactive load–duration curve* and is the cumulative sum of the reactive loads (e.g., fluorescent lights, household appliances, and motors) of consumers and the reactive power requirements of the system (e.g., transformers and regulators). Once the daily reactive load–duration curve is obtained, then by visual inspection of the curve, the size of the fixed capacitors can be determined to meet the minimum reactive load. For example, from Figure 8.19 one can determine that the size of the fixed capacitors required is 600 kvar.

The remaining kilovar demands of the loads are met by the generator or preferably by the switched capacitors. However, since meeting the kilovar demands of the system from the generator is too expensive and may create problems in the system stability, capacitors are used. Capacitor sizes are selected to match the remaining load characteristics from hour to hour.

Many utilities apply the following rule of thumb to determine the size of the switched capacitors: Add switched capacitors until

$$\frac{\text{kvar from switched} + \text{fixed capacitors}}{\text{kvar of peak reactive feeder load}} \geq 0.70 \tag{8.29}$$

From the voltage regulation point of view, the kilovars needed to raise the voltage at the end of the feeder to the maximum allowable voltage level at minimum load (25% of peak load) are the size of the fixed capacitors that should be used. On the other hand, if more than one capacitor bank is installed, the size of each capacitor bank at each location should have the same proportion, that is,

$$\frac{\text{kvar of load center}}{\text{kvar of total feeder}} = \frac{\text{kVA of load center}}{\text{kVA of total feeder}} \tag{8.30}$$

However, the resultant voltage rise must not exceed the light-load voltage drop. The approximate value of the percent voltage rise can be calculated from

$$\%\text{VR} = \frac{Q_{c,3\phi} \times x \times l}{10 \times V_{L-L}^2} \tag{8.31}$$

where

%VR is the percent voltage rise
$Q_{c,3\phi}$ is the three-phase reactive power due to fixed capacitors applied, kvar
x is the line reactance, Ω/min
l is the length of feeder from sending end of feeder to fixed capacitor location, min
V_{L-L} is the line-to-line voltage, kV

The percent voltage rise can also be found from

$$\%\text{VR} = \frac{I_c \times x \times l}{10 \times V_{L-L}} \tag{8.32}$$

where

$$I_c = \frac{Q_{c,3\phi}}{\sqrt{3} \times V_{L-L}}$$

$$= \text{current drawn by fixed-capacitor bank} \tag{8.33}$$

If the fixed capacitors are applied to the end of the feeder and if the percent voltage rise is already determined, the maximum value of the fixed capacitors can be determined from

$$\text{Max}\, Q_{c,3\phi} = \frac{10(\%\text{VR})V_{L-L}^2}{x \times l}\ \text{kvar} \tag{8.34}$$

Equations 8.31 and 8.32 can also be used to calculate the percent voltage rise due to the switched capacitors. Therefore, once the percent voltage rises due to both fixed and switched capacitors, the total percent voltage rise can be calculated as

$$\sum \%\text{VR} = \%\text{VR}_{\text{NSW}} + \%\text{VR}_{\text{SW}} \tag{8.35}$$

where

$\sum \%VR$ is the total percent voltage rise

$\%VR_{NSW}$ is the percent voltage rise due to fixed (or nonswitched) capacitors

$\%VR_{SW}$ is the percent voltage rise due to switched capacitors

Some utilities use the following rule of thumb: *The total amount of fixed and switched capacitors for a feeder is the amount necessary to raise the receiving-end feeder voltage to maximum at 50% of the peak feeder load.*

Once the kilovars of capacitors necessary for the system are determined, there remains only the question of proper location. *The rule of thumb for locating the fixed capacitors on feeders with uniformly distributed loads is to locate them approximately at two-thirds of the distance from the substation to the end of the feeder.*

For the uniformly decreasing loads, fixed capacitors are located approximately halfway out on the feeder. On the other hand, the location of the switched capacitors is basically determined by the voltage regulation requirements, and it usually turns out to be the last one-third of the feeder away from the source.

8.5.2 Types of Controls for Switched Shunt Capacitors

The switching process of capacitors can be done by manual control or by automatic control using some type of control intelligence. Manual control (at the location or as remote control) can be employed at distribution substations. The intelligence types that can be used in automatic control include time–switch, voltage, current, voltage–time, voltage–current, and temperature.

The most popular types are the time–switch control, voltage control, and voltage—current control. The time–switch control is the least-expensive one. Some combinations of these controls are also used to follow the reactive load–duration curve more closely, as illustrated in Figure 8.20.

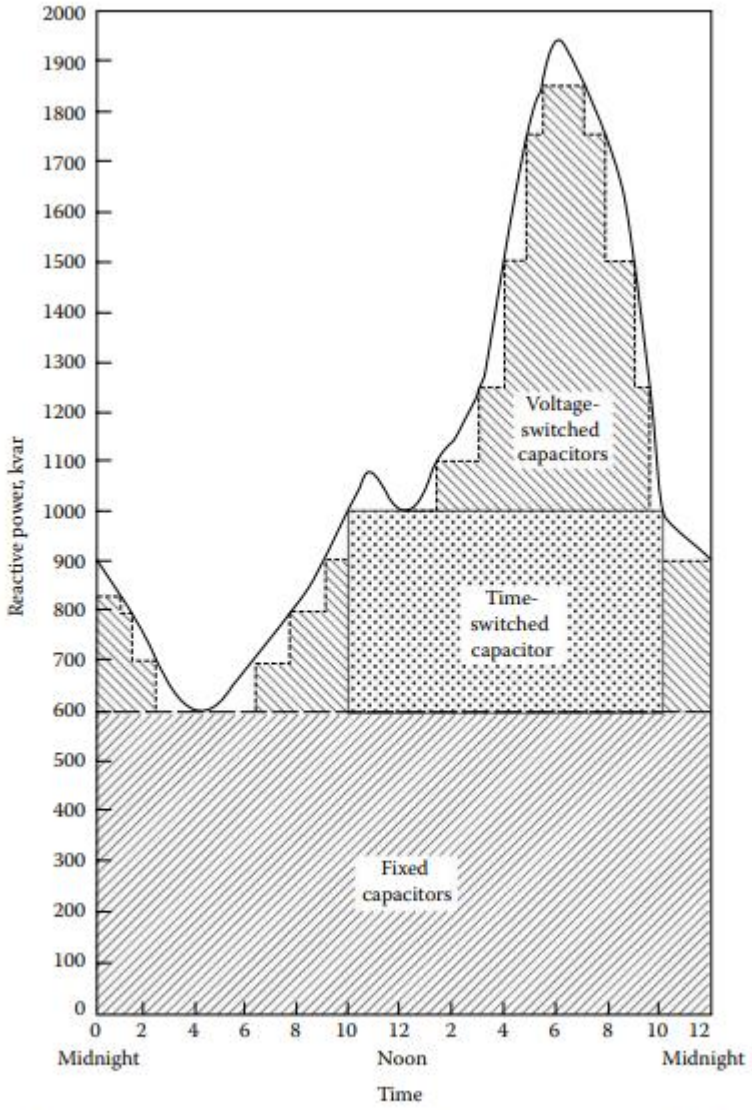

FIGURE 8.20 Meeting the reactive power requirements with fixed, voltage-controlled, and time-controlled capacitors.

8.5.3 Types of Three-Phase Capacitor-Bank Connections

A three-phase capacitor bank on a distribution feeder can be connected in (1) delta, (2) grounded wye, or (3) ungrounded wye. The type of connection used depends upon the following:

1. System type, that is, whether it is a grounded or an ungrounded system
2. Fusing requirements
3. Capacitor-bank location
4. Telephone interference considerations

A *resonance condition* may occur in delta and ungrounded-wye (floating neutral) banks when there is a one- or two-line open-type fault that occurs on the source side of the capacitor bank due to the maintained voltage on the open phase that backfeeds any transformers located on the load side of the open conductor through the series capacitor. As a result of this condition, the single-phase distribution transformers on four-wire systems may be damaged. Therefore, *ungrounded-wye capacitor banks are not recommended under the following conditions*:

1. On feeders with light load where the minimum load per phase beyond the capacitor bank does not exceed 150% of the per phase rating of the capacitor bank
2. On feeders with single-phase breaker operation at the sending end
3. On fixed capacitor banks
4. On feeder sections beyond a sectionalizing-fuse or single-phase recloser
5. On feeders with emergency load transfers

However, the *ungrounded-wye capacitor banks are recommended if one or more of the following conditions exist*:

1. Excessive harmonic currents in the substation neutral can be precluded.
2. Telephone interferences can be minimized.
3. Capacitor-bank installation can be made with two single-phase switches rather than with three single-pole switches.

Usually, *grounded-wye capacitor banks* are used only on four-wire three-phase primary systems. Otherwise, if a grounded-wye capacitor bank is used on a three-phase three-wire ungrounded-wye or delta system, it furnishes a ground current source that may disturb sensitive ground relays.

8.6 ECONOMIC JUSTIFICATION FOR CAPACITORS

Loads on electric utility systems include two components: active power (measured in kilowatts) and reactive power (measured in kilovars). Active power has to be generated at power plants, whereas reactive power can be provided by either power plants or capacitors. It is a well-known fact that shunt power capacitors are the most economical source to meet the reactive power requirements of inductive loads and transmission lines operating at a lagging power factor.

When reactive power is provided only by power plants, each system component (i.e., generators, transformers, transmission and distribution lines, switchgear, and protective equipment) has to be increased in size accordingly. Capacitors can mitigate these conditions by decreasing the reactive power demand all the way back to the generators. Line currents are reduced from capacitor locations all the way back to generation equipment. As a result, losses and loadings are reduced in distribution lines, substation transformers, and transmission lines.

Depending upon the uncorrected power factor of the system, the installation of capacitors can increase generator and substation capability for additional load at least 30% and can increase individual circuit capability, from the voltage regulation point of view, approximately 30%–100%.

Furthermore, the current reduction in transformer and distribution equipment and lines reduces the load on these kilovoltampere-limited apparatus and consequently delays the new facility installations. In general, the economic benefits force capacitor banks to be installed on the primary distribution system rather than on the secondary.

It is a *well-known rule of thumb that the optimum amount of capacitor kilovars to employ is always the amount at which the economic benefits obtained from the addition of the last kilovar exactly equal the installed cost of the kilovars of capacitors.*

The methods used by the utilities to determine the economic benefits derived from the installation of capacitors vary from company to company, but the determination of the total installed cost of a kilovar of capacitors is easy and straightforward.

In general, the *economic benefits that can be derived from capacitor installation* can be summarized as follows:

1. Released generation capacity
2. Released transmission capacity
3. Released distribution substation capacity
4. Additional advantages in distribution system
   a. Reduced energy (copper) losses
   b. Reduced voltage drop and consequently improved voltage regulation
   c. Released capacity of feeder and associated apparatus
   d. Postponement or elimination of capital expenditure due to system improvements and/or expansions
   e. Revenue increase due to voltage improvements

8.6.1 Benefits due to Released Generation Capacity

The released generation capacity due to the installation of capacitors can be calculated approximately from

$$\Delta S_G = \begin{cases} \left[\left(1 - \dfrac{Q_c^2 \times \cos^2\theta}{S_G^2}\right)^{1/2} + \dfrac{Q_c \times \sin\theta}{S_G} - 1\right] S_G & \text{when } Q_c > 0.10 S_G \\ Q_c \times \sin\theta & \text{when } Q_c \le 0.10 S_G \end{cases} \tag{8.36}$$

where

ΔS_G is the released generation capacity beyond maximum generation capacity at original power factor, kVA

S_G is the generation capacity, kVA

Q_c is the reactive power due to corrective capacitors applied, kvar

$\cos\theta$ is the original (or uncorrected or old) power factor before application of capacitors

Therefore, the annual benefits due to the released generation capacity can be expressed as

$$\Delta\$_G = \Delta S_G \times C_G \times i_G \tag{8.37}$$

where

$\Delta\$_G$ is the annual benefits due to released generation capacity, \$/year

ΔS_G is the released generation capacity beyond maximum generation capacity at original power factor, kVA

C_G is the cost of (peaking) generation, \$/kW

i_G is the annual fixed charge rate* applicable to generation

8.6.2 Benefits due to Released Transmission Capacity

The released transmission capacity due to the installation of capacitors can be calculated approximately as

$$\Delta S_T = \begin{cases} \left[\left(1 - \dfrac{Q_c^2 \times \cos^2\theta}{S_T^2}\right)^{1/2} + \dfrac{Q_c \times \sin\theta}{S_T} - 1\right] S_T & \text{when } Q_c > 0.10 S_T \\ Q_c \times \sin\theta & \text{when } Q_c \le 0.10 S_T \end{cases} \tag{8.38}$$

where

ΔS_T is the released transmission capacity† beyond maximum transmission capacity at original power factor, kVA

S_T is the transmission capacity, kVA

Thus, the annual benefits due to the released transmission capacity can be found as

$$\Delta\$_T = \Delta S_T \times C_T \times i_T \tag{8.39}$$

where

$\Delta\$_T$ is the annual benefits due to released transmission capacity, \$/year

ΔS_T is the released transmission capacity beyond maximum transmission capacity at original power factor, kVA

C_T is the cost of transmission line and associated apparatus, \$/kVA

i_T is the annual fixed charge rate applicable to transmission

8.6.3 Benefits due to Released Distribution Substation Capacity

The released distribution substation capacity due to the installation of capacitors can be found approximately from

$$\Delta S_S = \begin{cases} \left[\left(1 - \dfrac{Q_c^2 \times \cos^2\theta}{S_S^2}\right)^{1/2} + \dfrac{Q_c \times \sin\theta}{S_S} - 1\right] S_S & \text{when } Q_c > 0.10 S_S \\ Q_c \times \sin\theta & \text{when } Q_c \le 0.10 S_S \end{cases} \tag{8.40}$$

where

ΔS_S is the released distribution substation capacity beyond maximum substation capacity at original power factor, kVA
S_S is the distribution substation capacity, kVA

Hence, the annual benefits due to the released substation capacity can be calculated as

$$\Delta\$_S = \Delta S_S \times C_S \times i_s \tag{8.41}$$

where

$\Delta\$_S$ is the annual benefits due to the released substation capacity, \$/year
ΔS_S is the released substation capacity, kVA
C_S is the cost of substation and associated apparatus, \$/kVA
i_S is the annual fixed charge rate applicable to substation

8.6.4 Benefits due to Reduced Energy Losses

The annual energy losses are reduced as a result of decreasing copper losses due to the installation of capacitors. The conserved energy can be expressed as

$$\Delta\text{ACE} = \frac{Q_{c,3\phi} R (2 S_{L,3\phi} \sin\theta - Q_{c,3\phi}) 8760}{1000 \times V_{L\text{-}L}^2} \tag{8.42}$$

where

ΔACE is the annual conserved energy, kWh/year
$Q_{c,3\phi}$ is the three-phase reactive power due to corrective capacitors applied, kvar
R is the total line resistance to load center, Ω
$Q_{L,3\phi}$ is the original, that is, uncorrected, three-phase load, kVA
$\sin\theta$ is the sine of original (uncorrected) power factor angle
$V_{L\text{-}L}$ is the line-to-line voltage, kV

Therefore, the annual benefits due to the conserved energy can be calculated as

$$\Delta\$_{\text{ACE}} = \Delta\text{ACE} \times \text{EC} \tag{8.43}$$

where

ΔACE is the annual benefits due to conserved energy, \$/year
EC is the cost of energy, \$/kWh

8.6.5 Benefits due to Reduced Voltage Drops

The following advantages can be obtained by the installation of capacitors into a circuit:

1. The effective line current is reduced, and consequently, both IR and IX_L voltage drops are decreased, which results in improved voltage regulation.
2. The power factor improvement further decreases the effect of reactive line voltage drop.

The percent voltage drop that occurs in a given circuit can be expressed as

$$\%\text{VD} = \frac{S_{L,3\phi}(r\cos\theta + x\sin\theta)l}{10\times V_{L\text{-}L}^2} \tag{8.44}$$

where
%VD is the percent voltage drop
$S_{L,3\phi}$ is the three-phase load, kVA
r is the line resistance, 0/min
x is the line reactance, 0/min
l is the length of conductors, min
$V_{L\text{-}L}$ is the line-to-line voltage, kV

The voltage drop that can be calculated from Equation 8.44 is the basis for the application of the capacitors. After the application of the capacitors, the system yields a voltage rise due to the improved power factor and the reduced effective line current. Therefore, the voltage drops due to IR and IX_L are minimized. The approximate value of the percent voltage rise along the line can be calculated as

$$\%\text{VR} = \frac{Q_{c,3\phi}\times x\times l}{10\times V_{L\text{-}L}^2} \tag{8.45}$$

Furthermore, an additional voltage-rise phenomenon through every transformer from the generating source to the capacitors occurs due to the application of capacitors. It is independent of load and power factor of the line and can be expressed as

$$\%\text{VR}_T = \left(\frac{Q_{c,3\phi}}{S_{T,3\phi}}\right)x_T \tag{8.46}$$

where
$\%\text{VR}_T$ is the percent voltage rise through the transformer
$S_{T,3\phi}$ is the total three-phase transformer rating, kVA
x_T is the percent transformer reactance (approximately equal to the transformer's nameplate impedance).

8.6.6 Benefits due to Released Feeder Capacity

In general, feeder capacity is restricted by allowable voltage drop rather than by thermal limitations (as seen in Chapter 4). Therefore, the installation of capacitors decreases the voltage drop and consequently increases the feeder capacity.

Without including the released regulator or substation capacity, this additional feeder capacity can be calculated as

$$\Delta S_F = \frac{(Q_{c,3\phi})x}{x\sin\theta + r\cos\theta}\text{kVA} \tag{8.47}$$

Therefore, the annual benefits due to the released feeder capacity can be calculated as

$$\Delta\$_F = \Delta S_F \times C_F \times i_F \tag{8.48}$$

where

$\Delta\$_F$ is the annual benefits due to released feeder capacity, \$/year
ΔS_F is the released feeder capacity, kVA
C_F is the cost of installed feeder, \$/kVA
i_F is the annual fixed charge rate applicable to the feeder

8.6.7 Financial Benefits due to Voltage Improvement

The revenues to the utility are increased as a result of increased kilowatthour energy consumption due to the voltage rise produced on a system by the addition of the corrective capacitor banks. This is especially true for residential feeders.

The increased energy consumption depends on the nature of the apparatus used. For example, energy consumption for lighting increases as the square of the voltage used. As an example, Table 8.3 gives the additional kilowatthour energy increase (in percent) as a function of the ratio of the average voltage after the addition of capacitors to the average voltage before the addition of capacitors (based on a typical load diversity).

Thus, the increase in revenues due to the increased kilowatthour energy consumption can be calculated as

$$\Delta\$_{\text{BEC}} = \Delta\text{BEC} \times \text{BEC} \times \text{EC} \tag{8.49}$$

where

$\Delta\$_{\text{BEC}}$ is the additional annual revenue due to increased kWh energy consumption, \$/year
ΔBEC is the additional kWh energy consumption increase
BEC is the original (or base) annual kWh energy consumption, kWh/year

TABLE 8.3
Additional kWh Energy Increase After Capacitor Addition

$\frac{V_{av,after}}{V_{av,before}}$	ΔkWh Increase, %
1.00	0
1.05	8
1.10	16
1.15	25
1.20	34
1.25	43
1.30	52

8.6.8 Total Financial Benefits due to Capacitor Installations

Therefore, the total benefits due to the installation of capacitor banks can be summarized as

$$\sum \Delta\$ = (\text{Demand reduction}) + (\text{Energy reduction}) + (\text{Revenue increase})$$
$$= (\Delta\$_G + \Delta\$_T + \Delta\$_S + \Delta\$_F) + \Delta\$_{\text{ACE}} + \Delta\$_{\text{BEC}} \tag{8.50}$$

The total benefits obtained from Equation 8.50 should be compared against the annual equivalent of the total cost of the installed capacitor banks. The total cost of the installed capacitor banks can be found from

$$\Delta\text{EIC}_c = \Delta Q_c \times \text{IC}_c \times i_c \tag{8.51}$$

where

ΔEIC_c is the annual equivalent of the total cost of installed capacitor banks, \$/year
ΔQ_c is the required amount of capacitor-bank additions, kvar
IC_c is the cost of installed capacitor banks, \$/kvar
i_c is the annual fixed charge rate applicable to capacitors

In summary, capacitors can provide the utility industry with a very effective cost reduction instrument. With plant costs and fuel costs continually increasing, electric utilities benefit whenever new plant investment can be deferred or eliminated and energy requirements reduced.

Thus, capacitors aid in minimizing operating expenses and allow the utilities to serve new loads and customers with a minimum system investment. Today, utilities in the United States have approximately 1 kvar of power capacitors installed for every 2 kW of installed generation capacity in order to take advantage of the economic benefits involved [4].

8.7 PRACTICAL PROCEDURE TO DETERMINE THE BEST CAPACITOR LOCATION

In general, the best location for capacitors can be found by optimizing power loss and voltage regulation. A feeder voltage profile study is performed to warrant the most effective location for capacitors and the determination of a voltage that is within recommended limits.

Usually, a 2 V rise on circuits used in urban areas and a 3 V rise on circuits used in rural areas are approximately the maximum voltage changes that are allowed when a switched capacitor bank is placed into operation. The general iteration process involved is summarized in the following steps:

1. Collect the following circuit and load information:
   a. Any two of the following for each load: kilovoltamperes, kilovars, kilowatts, and load power factor
   b. Desired corrected power of circuit
   c. Feeder-circuit voltage
   d. A feeder-circuit map that shows locations of loads and presently existing capacitor banks
2. Determine the kilowatt load of the feeder and the power factor.
3. From Table 8.2, determine the kilovars per kilowatts of load (i.e., the correction factor) necessary to correct the feeder-circuit power factor from the original to the desired power factor. To determine the kilovars of capacitors required, multiply this correction factor by the total kilowatts of the feeder circuit.
4. Determine the individual kilovoltamperes and power factor for each load or group of loads.
5. To determine the kilovars on the line, multiply individual load or groups of loads by their respective reactive factors that can be found from Table 8.2.
6. Develop a nomograph to determine the line loss in W/1000 ft due to the inductive loads tabulated in steps 4 and 5. Multiply these line losses by their respective line lengths in thousands of feet. Repeat this process for all loads and line sections and add them to find the total inductive line loss.

7. In the case of having presently existing capacitors on the feeder, perform the same calculations as in step 6, but this time subtract the capacitive line loss from the total inductive line loss. Use the capacitor kilovars determined in step 3 and the nomograph developed for step 6 and find the line loss in each line section due to capacitors.
8. To find the distance to capacitor location, divide the total inductive line loss by capacitive line loss per thousand feet. If this quotient is greater than the line section length
   a. Divide the remaining inductive line loss by the capacitive line loss in the next line section to find the location
   b. If this quotient is still greater than the line section length, repeat step 8a
9. Prepare a voltage profile by hand calculations or by using a computer program for voltage profile and load analysis to determine the circuit voltages. If the profile shows that the voltages are inside the recommended limits, then the capacitors are installed at the location of minimum loss. If not, then use engineering judgment to locate them for the most effective voltage control application.

8.8 MATHEMATICAL PROCEDURE TO DETERMINE THE OPTIMUM CAPACITOR ALLOCATION

The optimum application of shunt capacitors on distribution feeders to reduce losses has been studied in numerous papers such as those by Neagle and Samson [5], Schmidt [7], Maxwell [8,9], Cook [10], Schmill [11], Chang [12–14], Bae [15], Gönen and Djavashi [17], and Grainger et al. [19,21–23]. Figure 8.21 shows a realistic representation of a feeder that contains a number of line segments with a combination of concentrated (or lumped-sum) and uniformly distributed loads, as suggested by Chang [13]. Each line segment represents a part of the feeder between sectionalizing devices, voltage regulators, and other points of significance. For the sake of convenience, the load or line current and the resulting I^2R loss can be assumed to have two components, namely, (1) those due to the in-phase or active component of current and (2) those due to the out-of-phase or reactive

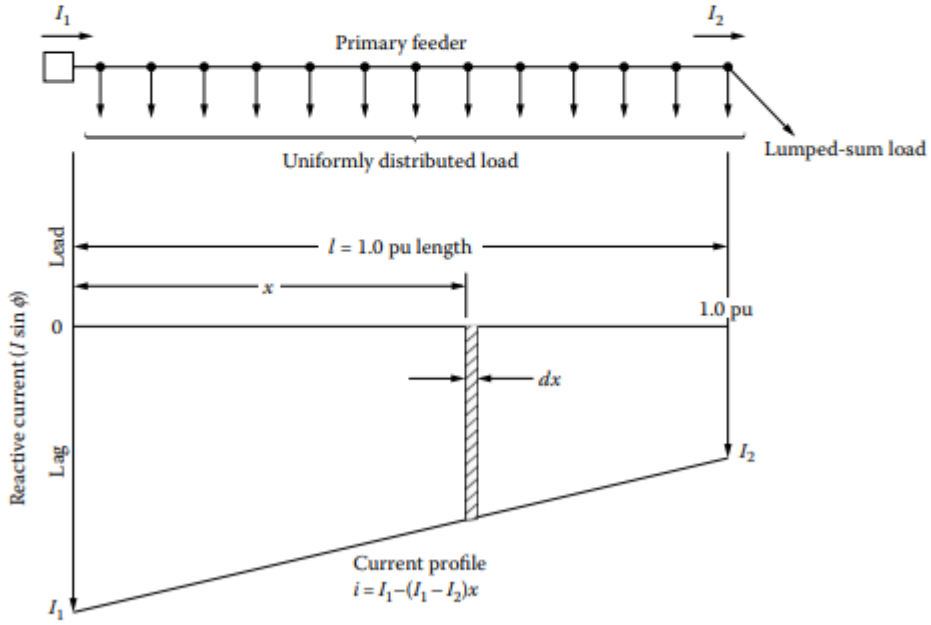

FIGURE 8.21 Primary feeder with lumped-sum (or concentrated) and uniformly distributed loads and reactive current profile before adding the capacitor.

component of current. Since losses due to the in-phase or active component of line current are not significantly affected by the application of shunt capacitors, they are not considered. This can be verified as follows.

Assume that the I^2R losses are caused by a lagging line current I flowing through the circuit resistance R. Therefore, it can be shown that

$$I^2R = (I\cos\phi)^2R + (I\sin\phi)^2R \tag{8.52}$$

After adding a shunt capacitor with current I_c, the resultants are a new line current I_1 and a new power loss I_1^2R. Hence,

$$I_1^2R = (I\cos\phi)^2R + (I\sin\phi - I_c)^2R \tag{8.53}$$

Therefore, the loss reduction as a result of the capacitor addition can be found as

$$\Delta P_{LS} = I^2R - I_1^2R \tag{8.54}$$

or by substituting Equations 8.56 and 8.57 into Equation 8.58,

$$\Delta P_{LS} = 2(I\sin\phi)I_cR \; - \; I_c^2R \tag{8.55}$$

Thus, only the out-of-phase or reactive component of line current, that is, $I\sin\theta$, should be taken into account for I^2R loss reduction as a result of a capacitor addition.

Assume that the length of a feeder segment is 1.0 pu length, as shown in Figure 8.21. The current profile of the line current at any given point on the feeder is a function of the distance of that point from the beginning of the feeder. Therefore, the differential I^2R loss of a dx differential segment located at a distance x can be expressed as

$$dP_{LS} = 3[I_1 - (I_1 - I_2)x]^2R\,dx \tag{8.56}$$

Therefore, the total I^2R loss of the feeder can be found as

$$\begin{aligned} P_{LS} &= \int_{x=0}^{1.0} dP_{LS} \\ &= 3\int_{x=0}^{1.0} [I_1 - (I_1 - I_2)x]^2R\,dx \\ &= \left(I_1^2 + I_1I_2 + I_2^2\right)R \end{aligned} \tag{8.57}$$

where

P_{LS} is the total I^2R loss of the feeder before adding the capacitor
I_1 is the reactive current at the beginning of the feeder segment
I_2 is the reactive current at the end of the feeder segment
R is the total resistance of the feeder segment
x is the per unit distance from the beginning of the feeder segment

8.8.1 Loss Reduction due to Capacitor Allocation

8.8.1.1 Case 1: One Capacitor Bank

The insertion of one capacitor bank on the primary feeder causes a break in the continuity of the reactive load profile, modifies the reactive current profile, and consequently reduces the loss, as shown in Figure 8.22.

Therefore, the loss equation after adding one capacitor bank can be found as before:

$$P'_{LS} = 3\int_{x=0}^{x_1} [I_1 - (I_1 - I_2)x - I_c]^2 R\,dx + 3\int_{x=x_1}^{1.0} [I_1 - (I_1 - I_2)x]^2 R\,dx \tag{8.58}$$

or

$$P'_{LS} = \left(I_1^2 + I_1 I_2 + I_2^2\right)R + 3x_1\left[(x_1 - 2)I_1 I_c - x_1 I_2 I_c + I_c^2\right]R \tag{8.59}$$

Thus, the per unit power loss reduction as a result of adding one capacitor bank can be found from

$$\Delta P_{LS} = \frac{P_{LS} - P'_{LS}}{P_{LS}} \tag{8.60}$$

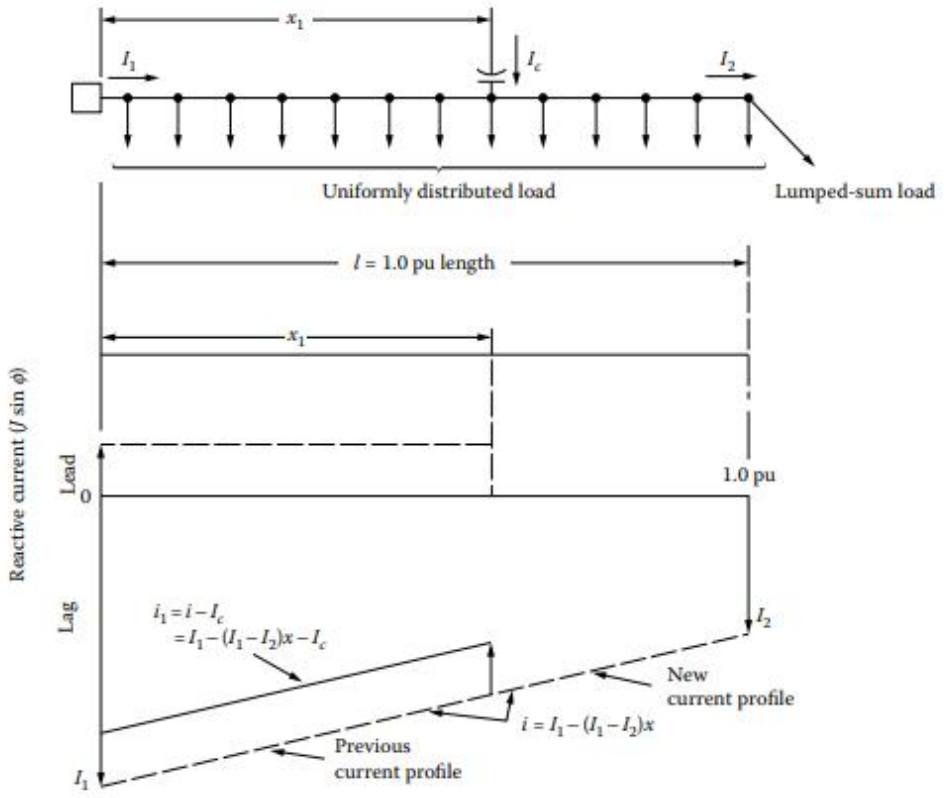

FIGURE 8.22 Loss reduction with one capacitor bank.

or substituting Equations 8.57 and 8.58 into Equation 8.60,

$$\Delta P_{LS} = \frac{-3x_1\left[(x_1-2)I_1I_c - x_1I_2I_c + I_c^2\right]R}{\left(I_1^2 + I_1I_2 + I_2^2\right)R} \tag{8.61}$$

or rearranging Equation 8.61 by dividing its numerator and denominator by I_1^2 so that

$$\Delta P_{LS} = \frac{3x_1}{1+(I_2/I_1)+(I_2/I_1)^2}\left[(2-x_1)\left(\frac{I_c}{I_1}\right) + x_1\left(\frac{I_2}{I_1}\right)\left(\frac{I_c}{I_1}\right) - \left(\frac{I_c}{I_1}\right)^2\right] \tag{8.62}$$

If c is defined as the ratio of the capacitive kilovoltamperes (ckVAs) of the capacitor bank to the total reactive load, that is,

$$c = \frac{\text{ckVA of capacitor installed}}{\text{Total reactive load}} \tag{8.63}$$

then

$$c = \frac{I_c}{I_1} \tag{8.64}$$

and if λ is defined as the ratio of the reactive current at the end of the line segment to the reactive current at the beginning of the line segment, that is,

$$\lambda = \frac{\text{Reactive current at the end of line segment}}{\text{Reactive current at the beginning of line segment}} \tag{8.65}$$

then

$$\lambda = \frac{I_2}{I_1} \tag{8.66}$$

Therefore, substituting Equations 8.64 and 8.66 into Equation 8.62, the per unit power loss reduction can be found as

$$\Delta P_{LS} = \frac{3x_1}{1+\lambda+\lambda^2}[(2-x_1)c + x_1\lambda c - c^2] \tag{8.67}$$

or

$$\Delta P_{LS} = \frac{3cx_1}{1+\lambda+\lambda^2}[(2-x_1) + x_1\lambda - c] \tag{8.68}$$

where x_1 is the per unit distance of the capacitor-bank location from the beginning of the feeder segment (between 0 and 1.0 pu).

If α is defined as the reciprocal of $1 + \lambda + \lambda^2$, that is,

$$\alpha = \frac{1}{1+\lambda+\lambda^2} \tag{8.69}$$

then Equation 8.68 can also be expressed as

$$\Delta P_{LS} = 3\alpha c x_1[(2 - x_1) + \lambda x_1 - c] \tag{8.70}$$

Figures 8.23 through 8.27 give the loss reduction that can be accomplished by changing the location of a single capacitor bank with any given size for different capacitor compensation ratios along the feeder for different representative load patterns, for example, uniformly distributed loads ($\lambda = 0$), concentrated or lumped-sum loads ($\lambda = 1$), or a combination of concentrated and uniformly distributed loads ($0 < \lambda < 1$). To use these nomographs for a given case, the following factors must be known:

1. Original losses due to the reactive current
2. Capacitor compensation ratio
3. The location of the capacitor bank

As an example, assume that the load on the line segment is uniformly distributed and the desired compensation ratio is 0.5. From Figure 8.23, it can be found that the maximum loss reduction can be obtained if the capacitor bank is located at 0.75 pu length from the source. The associated loss reduction is 0.85 pu or 85%. If the bank is located anywhere else on the feeder, however, the loss reduction would be less than the 85%.

In other words, there is only one location for any given-size capacitor bank to achieve the maximum loss reduction. Table 8.5 gives the optimum location and percent loss reduction for a given-size capacitor bank located on a feeder with uniformly distributed load ($\lambda = 0$). From the table it can be observed that the maximum loss reduction can be achieved by locating the single capacitor bank at the two-thirds length of the feeder away from the source. Figure 8.28 gives the loss reduction for a given capacitor bank of any size and located at the optimum location on a feeder with various combinations of load types based on Equation 8.70. Figure 8.29 gives the loss reduction due to an optimum-sized capacitor bank located on a feeder with various combinations of load types.

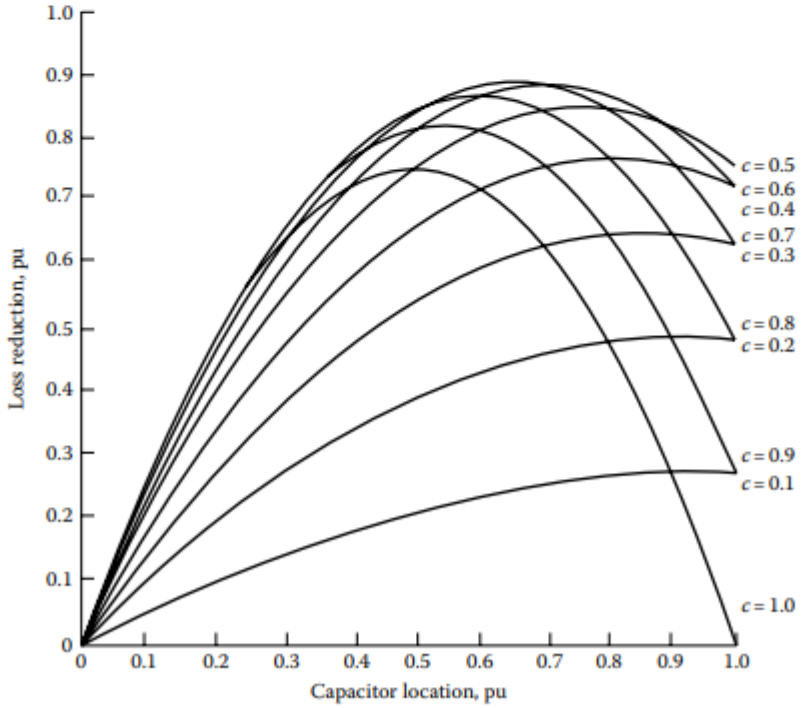

FIGURE 8.23 Loss reduction as a function of the capacitor-bank location and capacitor compensation ratio for a line segment with uniformly distributed loads ($\lambda = 0$).

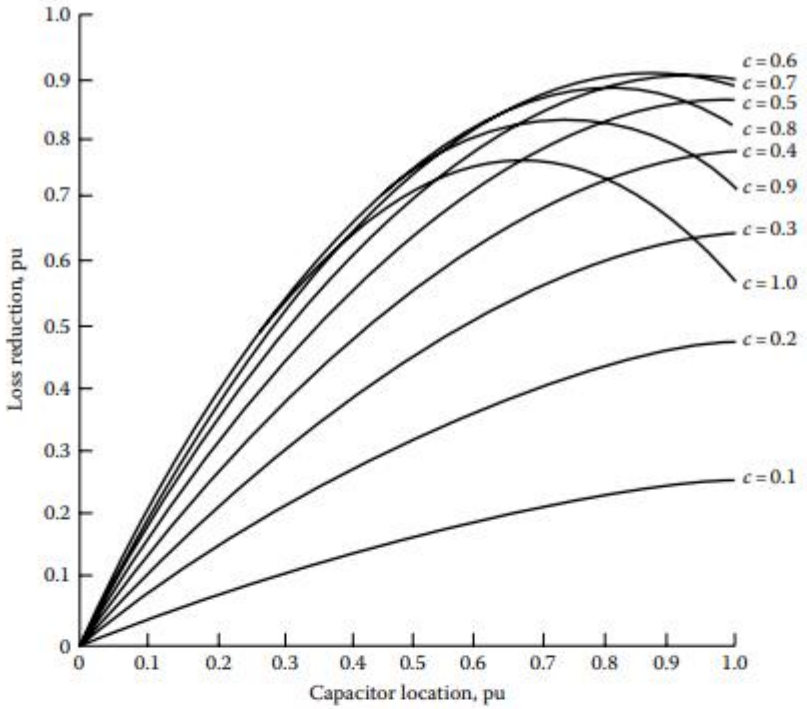

FIGURE 8.24 Loss reduction as a function of the capacitor-bank location and capacitor compensation ratio for a line segment with a combination of concentrated and uniformly distributed loads (λ = 1/4).

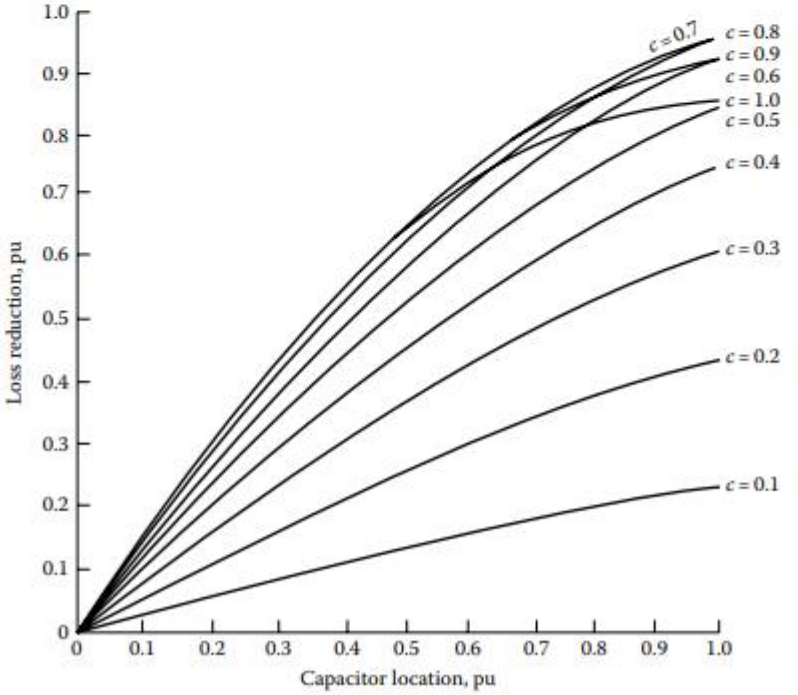

FIGURE 8.25 Loss reduction as a function of the capacitor-bank location and capacitor compensation ratio for a line segment with a combination of concentrated and uniformly distributed loads (λ = 1/2).

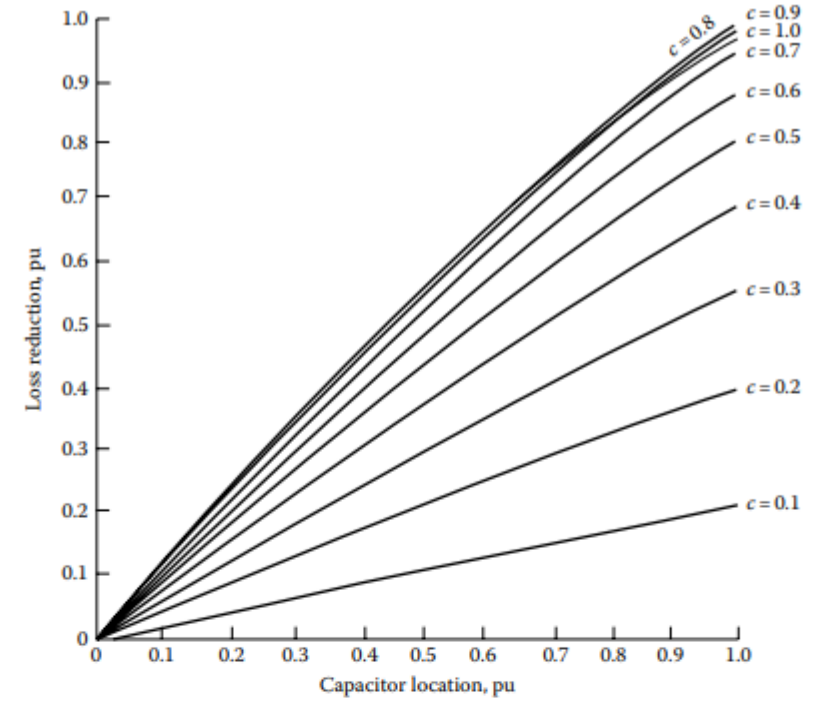

FIGURE 8.26 Loss reduction as a function of the capacitor-bank location and capacitor compensation ratio for a line segment with a combination of concentrated and uniformly distributed loads ($\lambda = 3/4$).

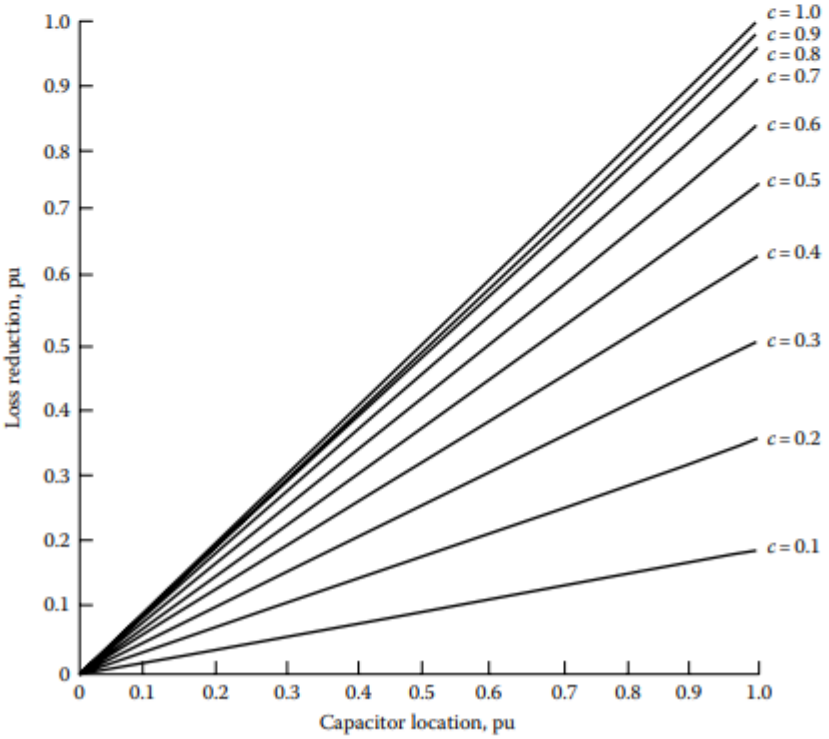

FIGURE 8.27 Loss reduction as a function of the capacitor-bank location and capacitor compensation ratio for a line segment with concentrated loads ($\lambda = 1$).

TABLE 8.5
Optimum Location and Optimum Loss Reduction

Capacitor-Bank Rating, pu	Optimum Location, pu	Optimum Loss Reduction, %
0.0	1.0	0
0.1	0.95	27
0.2	0.90	49
0.3	0.85	65
0.4	0.80	77
0.5	0.75	84
0.6	0.70	88
0.7	0.65	89
0.8	0.60	86
0.9	0.55	82
1.0	0.50	75

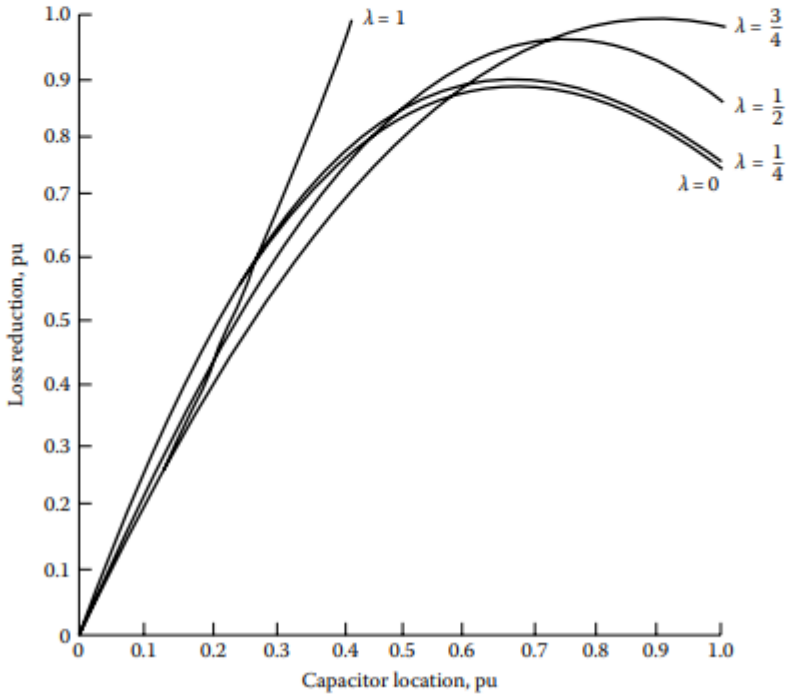

FIGURE 8.28 Loss reduction due to a capacitor bank located at the optimum location on a line section with various combinations of concentrated and uniformly distributed loads.

8.8.1.2 Case 2: Two Capacitor Banks

Assume that two capacitor banks of equal size are inserted on the feeder, as shown in Figure 8.30. The same procedure can be followed as before, and the new loss equation becomes

$$P'_{LS} = 3\int_{x=0}^{x_1}[I_1-(I_1-I_2)x-2I_c]^2R\,dx+3\int_{x=x_1}^{x_2}[I_1-(I_1I_2)x-I_c]^2R\,dx+3\int_{x=x_2}^{1.0}[I_1-(I_1-I_2)x]^2R\,dx \tag{8.71}$$

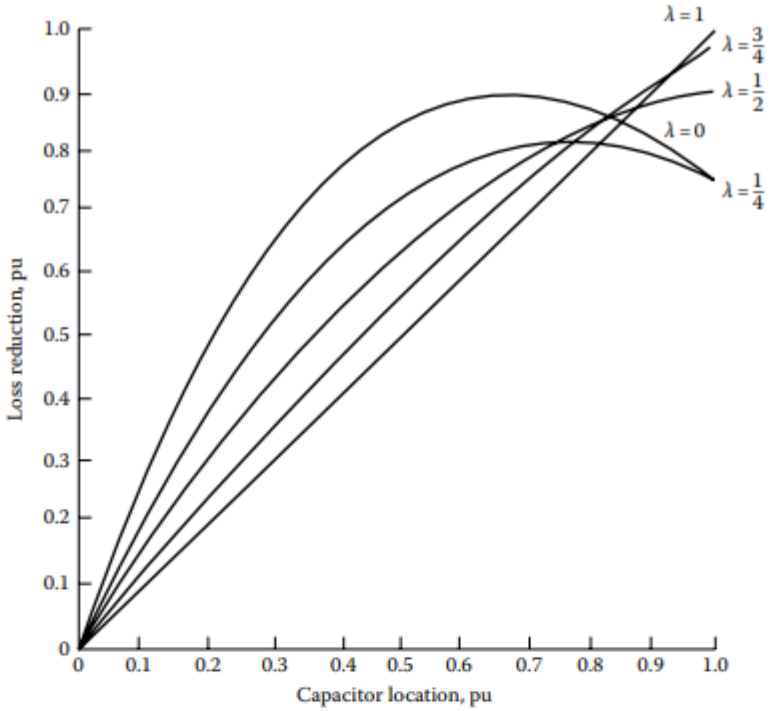

FIGURE 8.29 Loss reduction due to an optimum-sized capacitor bank located on a line segment with various combinations of concentrated and uniformly distributed loads.

Therefore, substituting Equations 8.57 and 8.71 into Equation 8.60, the new per unit loss reduction equation can be found as

$$\Delta P_{LS} = 3\alpha c x_1[(2-x_1)+\lambda x_1-3c]+3\alpha c x_2[(2-x_2)+\lambda x_2-c] \tag{8.72}$$

or

$$\Delta P_{LS} = 3\alpha c\{x_1[(2-x_1)+\lambda x_1-3c]+x_2[(2-x_2)+\lambda x_2-c]\} \tag{8.73}$$

8.8.1.3 Case 3: Three Capacitor Banks

Assume that three capacitor banks of equal size are inserted on the feeder, as shown in Figure 8.31. The relevant per unit loss reduction equation can be found as

$$\Delta P_{LS} = 3\alpha c\{x_1[(2-x_1)+\lambda x_1-5c]+x_2[(2-x_2)+\lambda x_2-3c]+x_3[(2-x_3)+\lambda x_3-c]\} \tag{8.74}$$

8.8.1.4 Case 4: Four Capacitor Banks

Assume that four capacitor banks of equal size are inserted on the feeder, as shown in Figure 8.32. The relevant per unit loss reduction equation can be found as

$$\begin{aligned}\Delta P_{LS} = 3\alpha c\{&x_1[(2-x_1)+\lambda x_1-7c]+x_2[(2-x_2)+\lambda x_2-5c]\\&+x_3[(2-x_3)+\lambda x_3-3c]+x_4[(2-x_4)+\lambda x_4-c]\}\end{aligned} \tag{8.75}$$

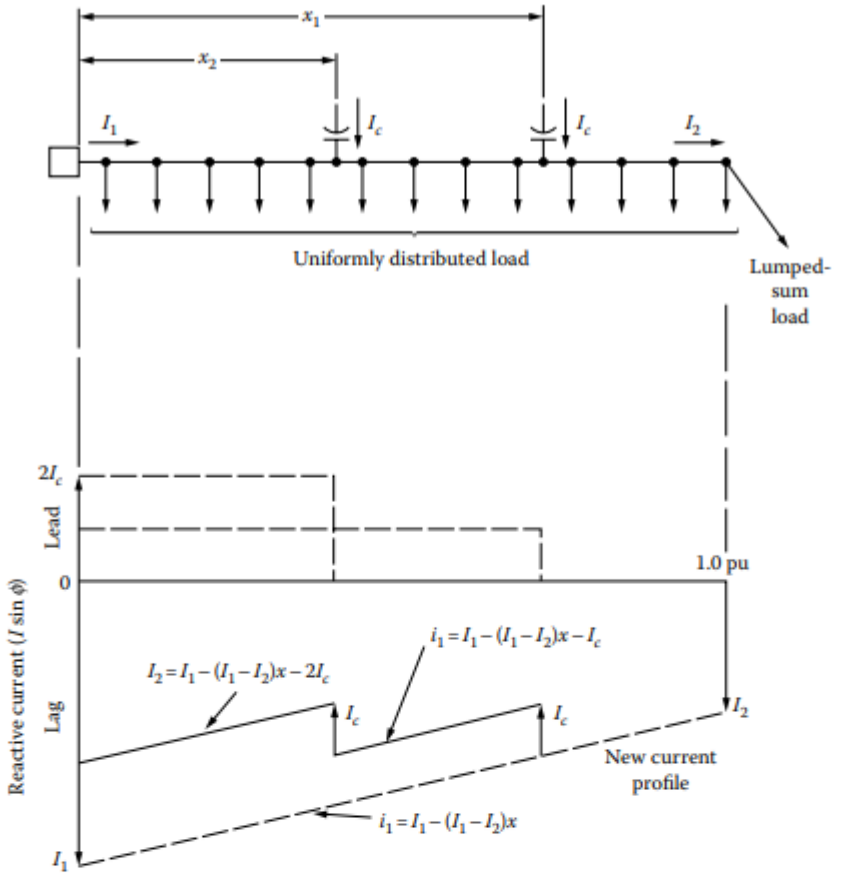

FIGURE 8.30 Loss reduction with two capacitor banks.

8.8.1.5 Case 5: *n* Capacitor Banks

As the aforementioned results indicate, the per unit loss reduction equations follow a definite pattern as the number of capacitor banks increases. Therefore, the general equation for per unit loss reduction, for an n capacitor-bank feeder, can be expressed as

$$P_{LS} = 3\alpha c \sum_{i=1}^{n} x_i[(2 - x_i) + \lambda x_i - (2i - 1)c] \tag{8.76}$$

where

c is the capacitor compensation ratio at each location (determined from Equation 8.63)
x_i is the per unit distance of the ith capacitor-bank location from the source
n is the total number of capacitor banks

8.8.2 Optimum Location of a Capacitor Bank

The optimum location for the ith capacitor bank can be found by taking the first-order partial derivative of Equation 8.76 with respect to x_i and setting the resulting expression equal to zero. Therefore,

$$x_{i,\text{opt}} = \frac{1}{1 - \lambda} - \frac{(2i - 1)c}{2(1 - \lambda)} \tag{8.77}$$

where $x_{i,\text{opt}}$ is the optimum location for the ith capacitor bank in per unit length.

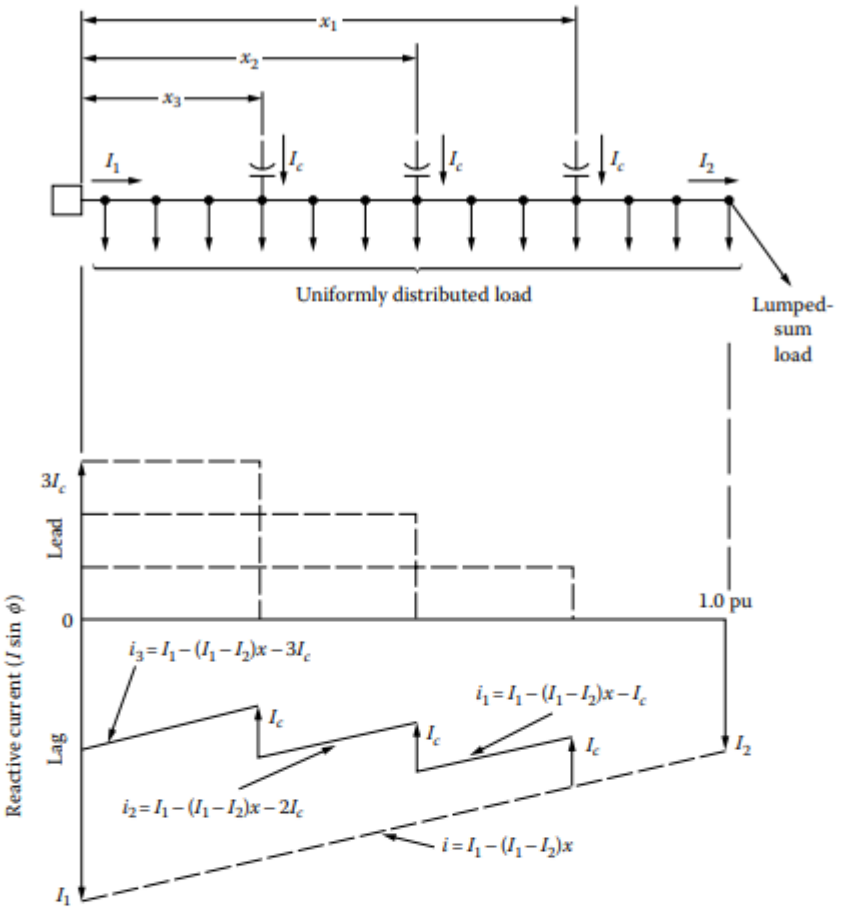

FIGURE 8.31 Loss reduction with three capacitor banks.

By substituting Equation 8.81 into Equation 8.80, the optimum loss reduction can be found as

$$P_{\text{LS, opt}} = 3\alpha c \sum_{i=1}^{n} \left[\frac{1}{1-\lambda} - \frac{(2i-1)c}{(1-\lambda)} + \frac{i^2c^2}{1-\lambda} - \frac{c^2}{4(1-\lambda)} - \frac{ic^2}{1-\lambda} \right] \tag{8.78}$$

Equation 8.78 is an infinite series of algebraic form that can be simplified by using the following relations:

$$\sum_{i=1}^{n} (2i-1) = n^2 \tag{8.79}$$

$$\sum_{i=1}^{n} i = \frac{n(n+1)}{2} \tag{8.80}$$

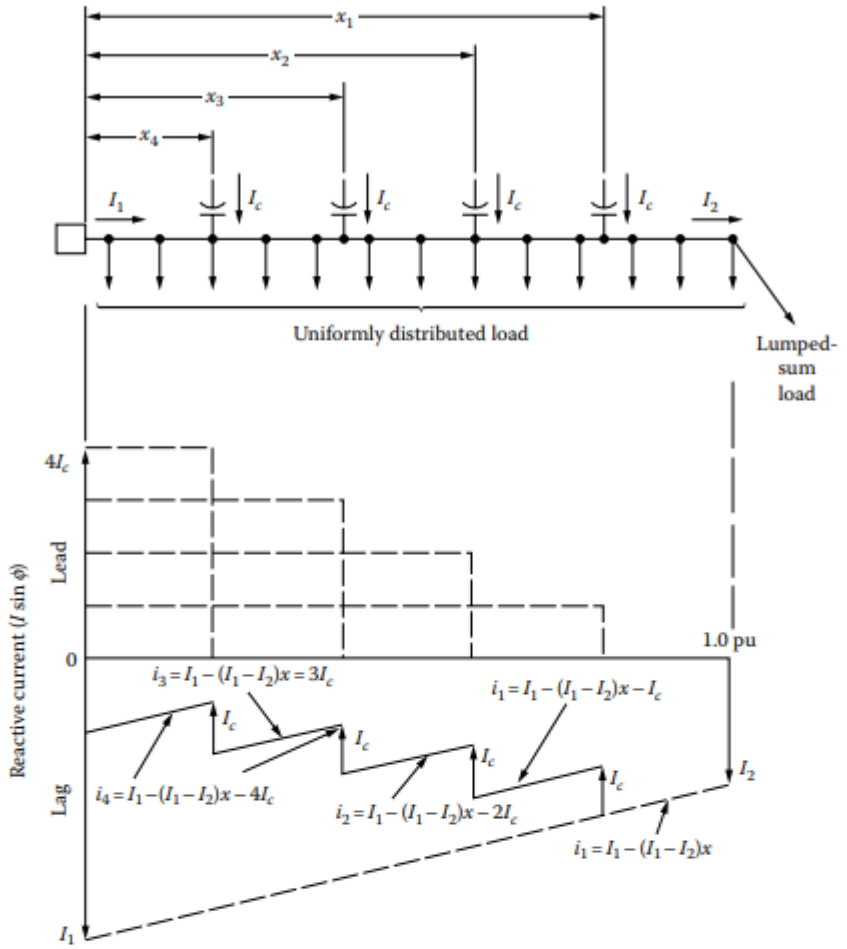

FIGURE 8.32 Loss reduction with four capacitor banks.

$$\sum_{i=1}^{n} i^2 = \frac{n(n+1)(2n+1)}{6} \tag{8.81}$$

$$\sum_{i=1}^{n} \frac{1}{1-\lambda} = \frac{n}{1-\lambda} \tag{8.82}$$

Therefore,

$$P_{\text{LS, opt}} = 3\alpha c \sum_{i=1}^{n} \left[\frac{n}{1-\lambda} - \frac{n^2 c}{(1-\lambda)} + \frac{nc^2(n+1)(2n+1)}{6} - \frac{nc^2}{4(1-\lambda)} - \frac{nc^2(n+1)}{2(1-\lambda)} \right] \tag{8.83}$$

$$P_{\text{LS, opt}} = \frac{3\alpha c}{1-\lambda} \left[n - cn^2 + \frac{c^2 n(4n^2-1)}{12} \right] \tag{8.84}$$

The capacitor compensation ratio at each location can be found by differentiating Equation 8.88 with respect to c and setting it equal to zero as

$$c = \frac{2}{2n+1} \tag{8.85}$$

Equation 8.86 can be called the $2/(2n + 1)$ *rule*. For example, for $n = 1$, the capacitor rating is two-thirds of the total reactive load that is located at

$$x_1 = \frac{2}{3(1-\lambda)} \tag{8.86}$$

of the distance from the source to the end of the feeder, and the peak loss reduction is

$$\Delta P_{LS,opt} = \frac{2}{3(1-\lambda)} \tag{8.87}$$

For a feeder with a uniformly distributed load, the reactive current at the end of the line is zero (i.e., $I_2 = 0$); therefore,

$$\lambda = 0 \quad \text{and} \quad \alpha = 1$$

Thus, for the optimum loss reduction of

$$\Delta P_{LS,opt} = \frac{8}{9}\,\text{pu} \tag{8.88}$$

the optimum value of x_1 is

$$x_1 = \frac{2}{3}\,\text{pu} \tag{8.89}$$

and the optimum value of c is

$$c = \frac{2}{3}\,\text{pu} \tag{8.90}$$

Figure 8.33 gives a maximum loss reduction comparison for capacitor banks, with various total reactive compensation levels and located optimally on a line segment that has uniformly distributed load ($\lambda = 0$), based on Equation 8.84. The given curves are for one, two, three, and infinite number of capacitor banks.

For example, from the curve given for one capacitor bank, it can be observed that a capacitor bank rated two-thirds of the total reactive load and located at two-thirds of the distance out on the feeder from the source provides for a loss reduction of 89%. In the case of two capacitor banks, with four-fifths of the total reactive compensation, located at four-fifths of the distance out on the feeder, the maximum loss reduction is 96%. Figure 8.34 gives similar curves for a combination of concentrated and uniformly distributed loads ($\lambda = 1/4$).

8.8.3 Energy Loss Reduction due to Capacitors

The per unit energy loss reduction in a three-phase line segment with a combination of concentrated and uniformly distributed loads due to the allocation of fixed shunt capacitors is

$$\Delta EL = 3\alpha c \sum_{i=1}^{n} x_i[(2-x_i)F'_{LD} + x_i\lambda F'_{LD} - (2i-1)c]T \tag{8.91}$$

where

F'_{LD} is the reactive load factor = Q/S

T is the total time period during which fixed-shunt-capacitor banks are connected

ΔEL is the energy loss reduction, pu

The optimum locations for the fixed shunt capacitors for the maximum energy loss reduction can be found by differentiating Equation 8.91 with respect to x_i and setting the result equal to zero. Therefore,

$$\frac{\partial(\Delta EL)}{\partial x_i} = 3\alpha c[2F'_{LD}(\lambda-1)x_i + 2F'_{LD} - (2i-1)c] \tag{8.92}$$

$$\frac{\partial^2(\Delta EL)}{\partial x_i^2} = -2F'_{LD}(1-\lambda) < 0 \tag{8.93}$$

The optimum capacitor location for the maximum energy loss reduction can be found by setting Equation 8.92 to zero, so that

$$x_{i,opt} = \frac{1}{1-\lambda} - \frac{(2i-1)c}{2(1-\lambda)F'_{LD}} \tag{8.94}$$

Similarly, the optimum total capacitor rating can be found as

$$C_T = \frac{2n}{2n+1}F'_{LD} \tag{8.95}$$

From Equation 8.95, it can be observed that if the total number of capacitor banks approaches infinity, then the optimum total capacitor rating becomes equal to the reactive load factor.

If only one capacitor bank is used, the optimum capacitor rating to provide for the maximum energy loss reduction is

$$C_T = \frac{2}{3}F'_{LD} \tag{8.96}$$

This equation gives the well-known *two-thirds rule for fixed shunt capacitors*. Figure 8.35 shows the relationship between the total capacitor compensation ratio and the reactive load factor, in order to achieve maximum energy loss reduction, for a line segment with uniformly distributed load where $\lambda = 0$ and $\alpha = 1$.

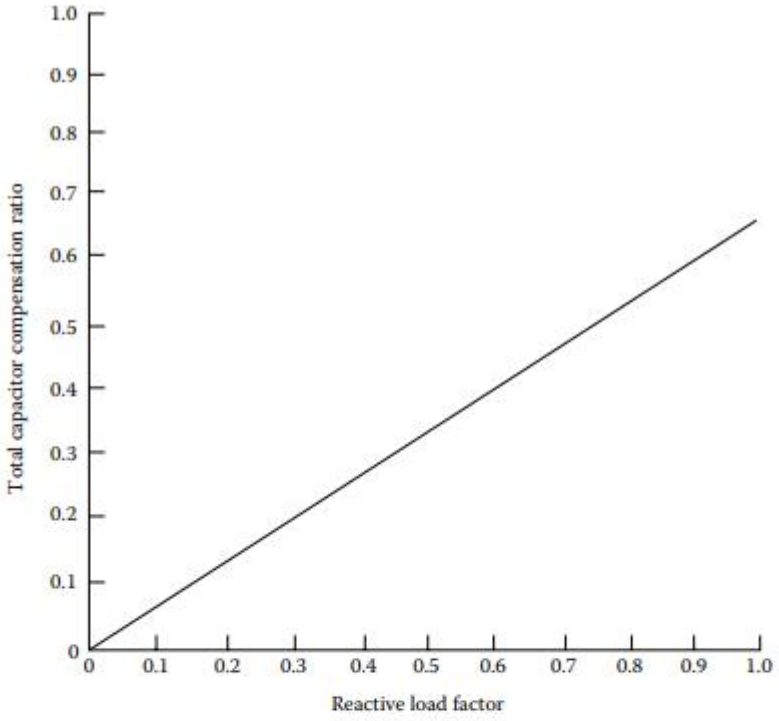

FIGURE 8.35 Relationship between the total capacitor compensation ratio and the reactive load factor for uniformly distributed load ($\lambda = 0$ and $\alpha = 1$).

By substituting Equation 8.94 into Equation 8.95, the optimum energy loss reduction can be found as

$$\begin{aligned}\Delta EL_{opt} &= \frac{3\alpha c}{1-\lambda}\left[nF'_{LD} - cn^2 + \frac{c^2 n(4n^2-1)}{12F'_{LD}}\right]T \\ &= \frac{3\alpha cn}{1-\lambda}\left[F'_{LD} - cn + \frac{c^2 n^2(4n^2-1)}{12n^2F'_{LD}}\right]T \\ &= \frac{3\alpha C_T}{1-\lambda}\left[F'_{LD} - C_T + \frac{C_T^2(4n^2-1)}{12n^2F'_{LD}}\right]T \end{aligned} \tag{8.97}$$

where C_T is the total reactive compensation level = cn.

Based on Equation 8.97, the optimum energy loss reductions with any size capacitor bank located at the optimum location for various reactive load factors have been calculated, and the results have been plotted in Figures 8.36 through 8.40. It is important to note the fact that, for all values of λ, when reactive load factors are 0.2 or 0.4, the use of a fixed capacitor bank with corrective ratios of 0.4 and 0.8, respectively, gives a zero energy loss reduction.

Figures 8.41 through 8.45 show the effects of various reactive load factors on the maximum energy loss reductions for a feeder with different load patterns.

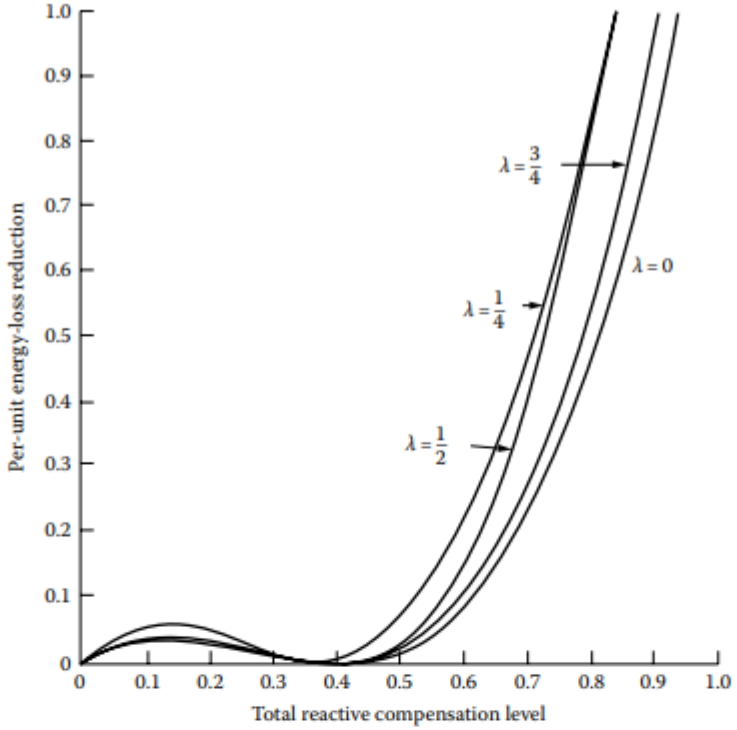

FIGURE 8.36 Energy loss reduction with any capacitor-bank size, located at optimum location ($F'_{LD} = 0.2$).

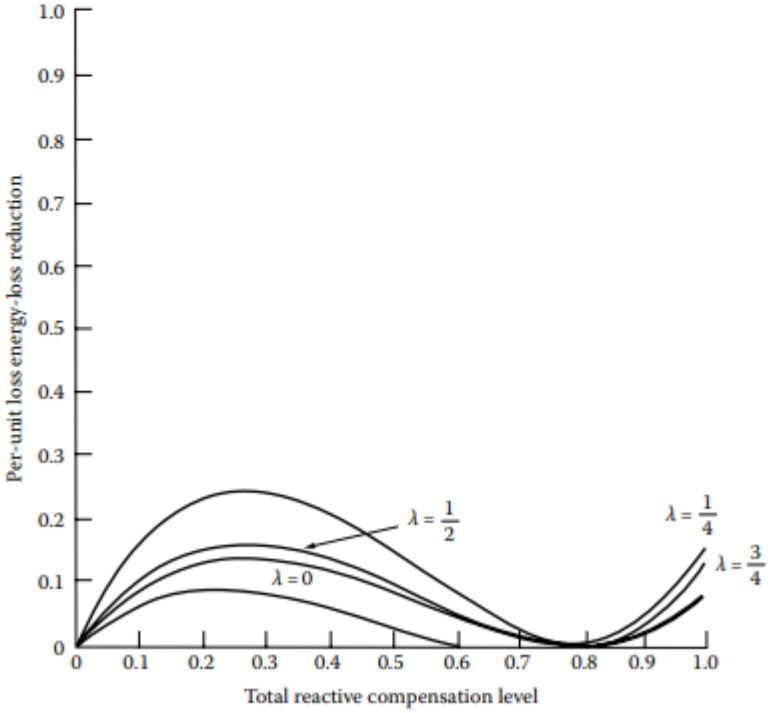

FIGURE 8.37 Energy loss reduction with any capacitor-bank size, located at the optimum location ($F'_{LD} = 0.4$).

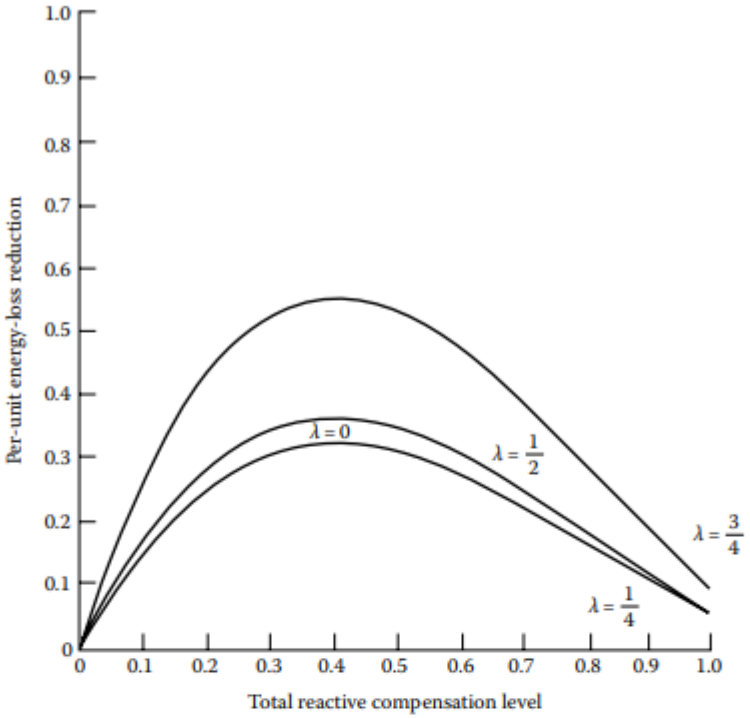

FIGURE 8.38 Energy loss reduction with any capacitor-bank size, located at the optimum location ($F'_{LD} = 0.6$).

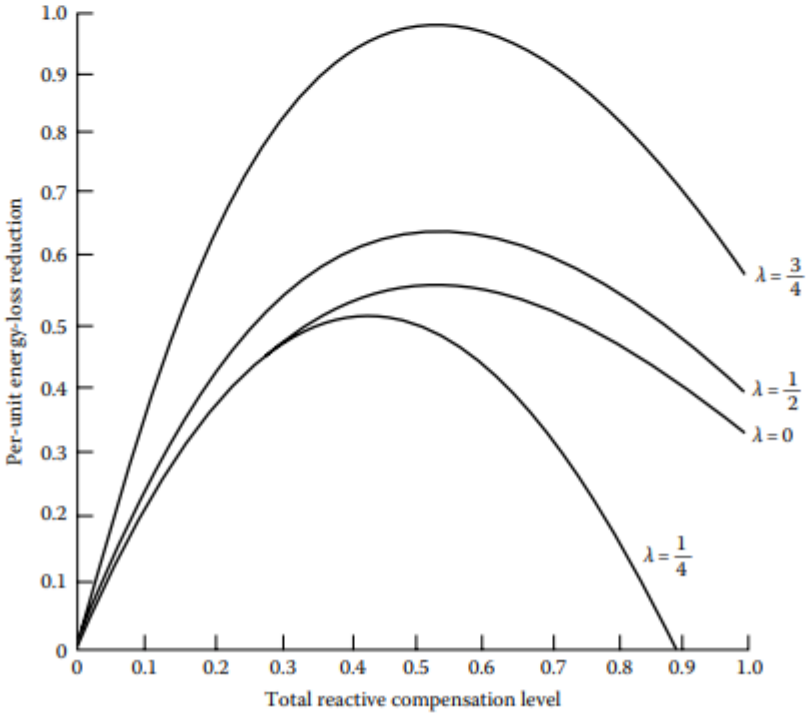

FIGURE 8.39 Energy loss reduction with any capacitor-bank size, located at the optimum location ($F'_{LD} = 0.8$).

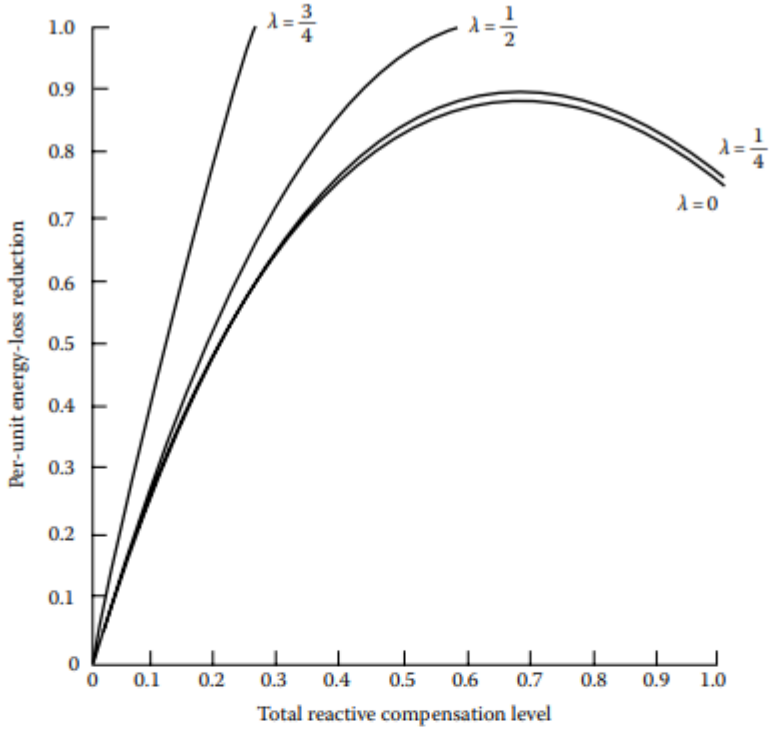

FIGURE 8.40 Energy loss reduction with any capacitor-bank size, located at the optimum location ($F'_{LD} = 1.0$).

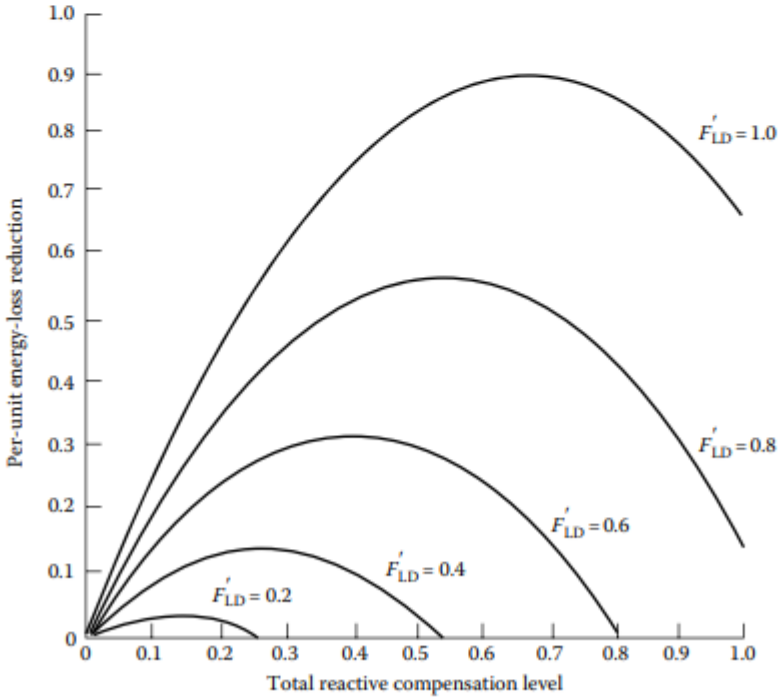

FIGURE 8.41 Effects of reactive load factors on energy loss reduction due to capacitor-bank installation on a line segment with uniformly distributed load ($\lambda = 0$).

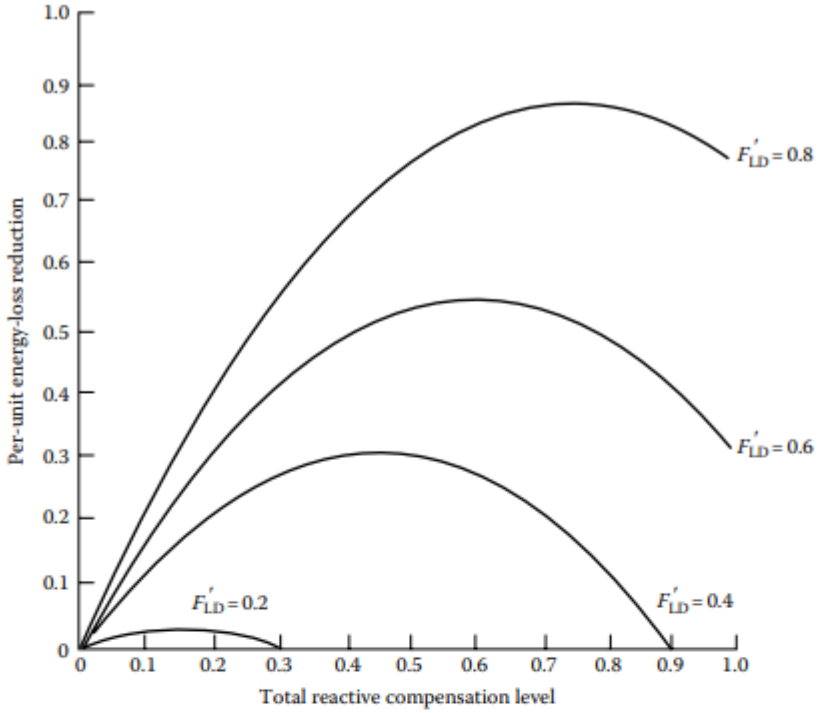

FIGURE 8.42 Effects of reactive load factors on energy loss reduction due to capacitor-bank installation on a line segment with a combination of concentrated and uniformly distributed loads (λ = 1/4).

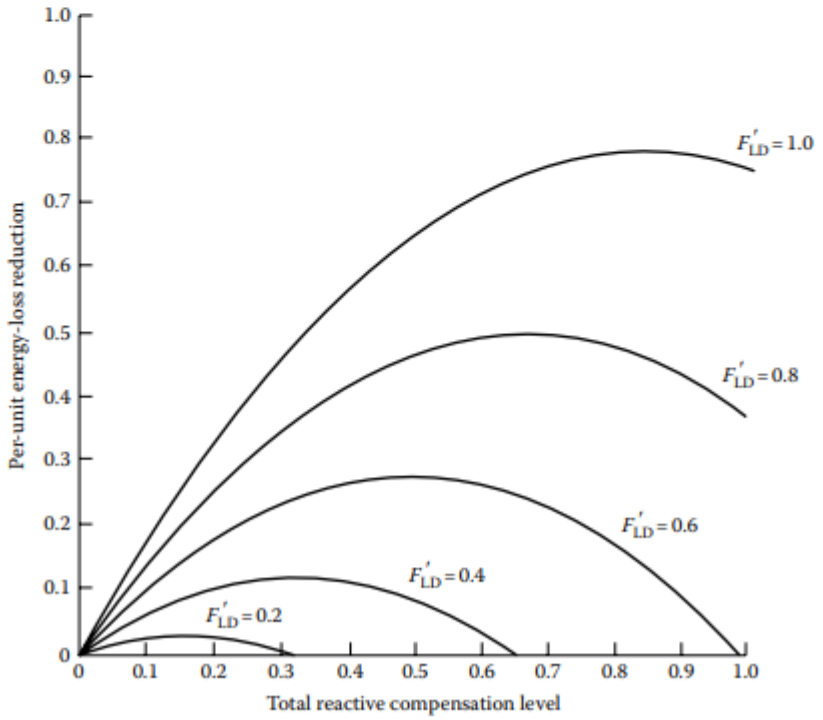

FIGURE 8.43 Effects of reactive load factors on energy loss reduction due to capacitor-bank installation on a line segment with a combination of concentrated and uniformly distributed loads (λ = 1/2).

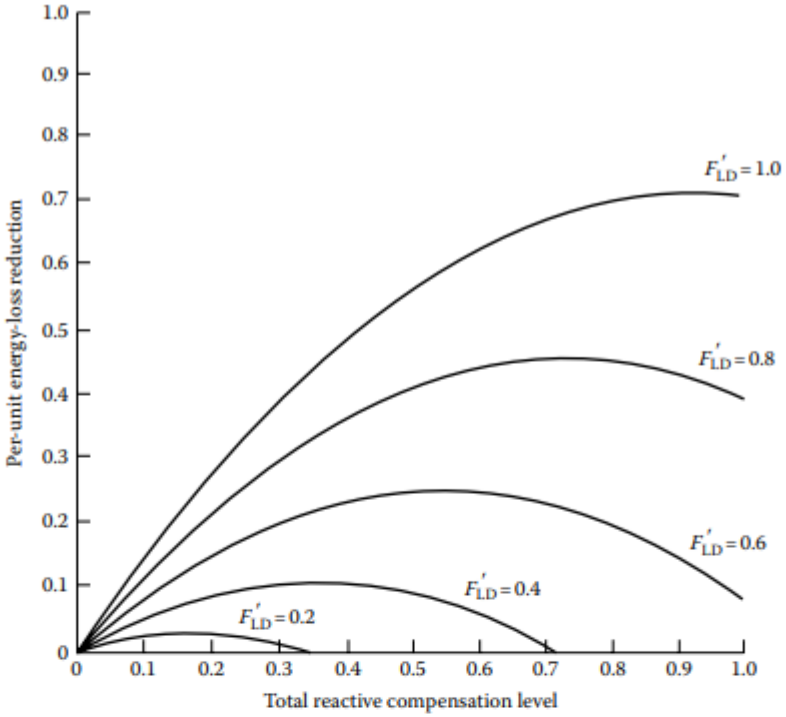

FIGURE 8.44 Effects of reactive load factors on loss reduction due to capacitor-bank installation on a line segment with a combination of concentrated and uniformly distributed loads ($\lambda = 3/4$).

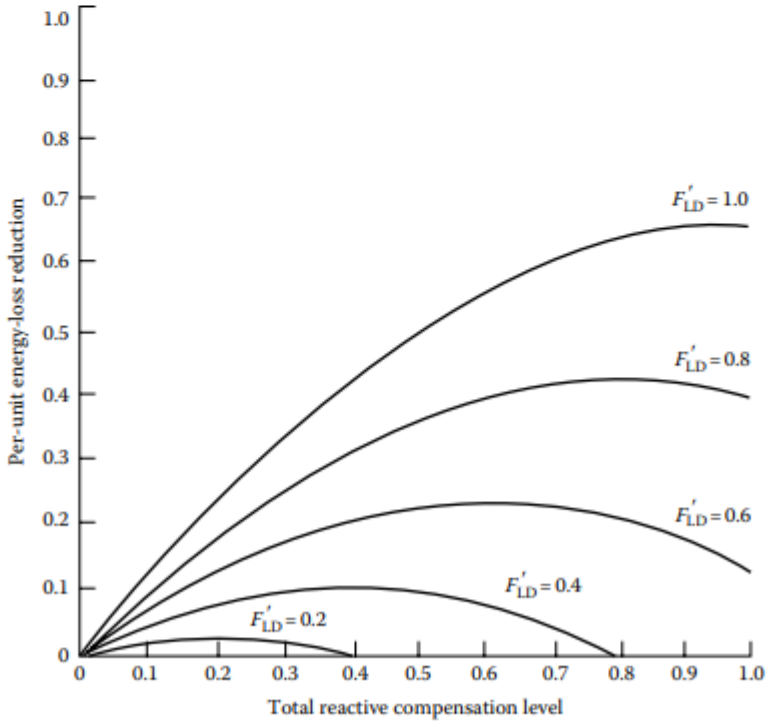

FIGURE 8.45 Effects of reactive load factors on energy loss reduction due to capacitor-bank installation on a line segment with a concentrated load ($\lambda = 1$).

8.8.4 Relative Ratings of Multiple Fixed Capacitors

The total savings due to having two fixed-shunt-capacitor banks located on a feeder with uniformly distributed load can be found as

$$\sum \$ = 3c_1\left(1-c_1+\frac{c_1^2}{4}\right)K_2+3c_2\left(1-c_2+\frac{c_2^2}{4}\right)K_2+3c_1\left(F'_{LD}-c_1+\frac{c_1^2}{4F'_{LD}}\right)K_1T$$
$$+3c_2\left(F'_{LD}-c_2+\frac{c_2^2}{4F'_{LD}}\right)K_1T \tag{8.98}$$

or

$$\sum \$ = 3[(c_1+c_2)(K_1+K_2T\,F'_{LD})]-\left(c_1^2+c_2^2\right)(K_2+K_1T)$$
$$+\frac{1}{4}\left(c_1^3+c_2^3\right)\left(K_2+\frac{K_1T}{F'_{LD}}\right) \tag{8.99}$$

where

K_1 is the a constant to convert energy loss savings to dollars, \$/kWh
K_2 is the a constant to convert power loss savings to dollars, \$/kWh

Since the total capacitor-bank rating is equal to the sum of the ratings of the capacitor banks,

$$C_T = c_1 + c_2 \tag{8.100}$$

or

$$c_1 = C_T - c_2 \tag{8.101}$$

By substituting Equation 8.101 into Equation 8.99,

$$\sum \$ = 3\left[C_T(K_1+K_2T\,F'_{LD})-\left(C_T^2+2c_2^2-2c_2C_T\right)(K_1T+K_2)\right.$$
$$\left.+\frac{1}{4}\left(C_T^3-3c_2C_T^2+3c_2^2C_T\right)\left(K_2+\frac{K_1T}{F'_{LD}}\right)\right] \tag{8.102}$$

The optimum rating of the second fixed capacitor bank as a function of the total capacitor-bank rating can be found by differentiating Equation 8.106 with respect to c_2, so that

$$\frac{\partial\left(\sum \$\right)}{\partial c_2} = -3(4c_2-2C_T)(K_2+K_1T)+\frac{3}{4}\left(-3C_T^2+6c_2C_T\right)\left(K_2+\frac{K_1T}{F'_{LD}}\right) \tag{8.103}$$

and setting the resultant equation equal to zero,

$$2c_2 = C_T \tag{8.104}$$

and since

$$C_T = c_1 + c_2 \tag{8.105}$$

then

$$c_1 = c_2 \tag{8.106}$$

The result shows that if multiple fixed-shunt-capacitor banks are to be employed on a feeder with uniformly distributed loads, in order to receive the maximum savings, all capacitor banks should have the same rating.

8.8.5 General Savings Equation for Any Number of Fixed Capacitors

From Equations 8.76 and 8.92, the total savings equation in a three-phase primary feeder with a combination of concentrated and uniformly distributed loads can be found as

$$\sum \$ = 3K_1\alpha c \sum_{i=1}^{n} x_i[(2-x_i)F'_{\mathrm{LD}} + x_i\lambda F'_{\mathrm{LD}} - (2i-1)c]T$$
$$+3K_2\alpha c \sum_{i=1}^{n} x_i[(2-x_i) + x_i\lambda - (2i-1)c] - K_3C_T \tag{8.107}$$

where

K_1 is the constant to convert energy loss savings to dollars, \$/kWh
K_2 is the constant to convert power loss savings to dollars, \$/kWh
K_3 is the constant to convert total fixed capacitor ratings to dollars, \$/kvar
x_i is the ith capacitor location, pu length
n is the total number of capacitor banks
F'_{LD} is the reactive load factor
C_T is the total reactive compensation level
c is the capacitor compensation ratio at each location
λ is the ratio of reactive current at the end of the line segment to the reactive load current at the beginning of the line segment

$$\alpha = 1/(1 + \lambda + \lambda^2)$$

T is the total time period during which fixed-shunt-capacitor banks are connected

By taking the first- and second-order partial derivatives of Equation 8.107 with respect to x_i,

$$\frac{\partial\left(\sum \$\right)}{\partial x_i} = 3\alpha c[2x_i(K_2 + K_1T\,F'_{\mathrm{LD}})(\lambda - 1) + 2(K_2 + K_1T\,F'_{\mathrm{LD}}) - (2i-1)c(K_2 + K_1T)] \tag{8.108}$$

and

$$\frac{\partial^2\left(\sum \$\right)}{\partial x_i^2} = -6\alpha c(1-\lambda)(K_2 + K_1TF'_{\mathrm{LD}}) < 0 \tag{8.109}$$

Setting Equation 8.108 equal to zero, the optimum location for any fixed capacitor bank with any rating can be found as

$$x_i = \frac{1}{1-\lambda} - \frac{(2i-1)c}{1-\lambda}\frac{K_2 + K_1 T}{K_2 + K_1 T F'_{LD}} \tag{8.110}$$

where $0 \leq x_i \leq 1.0$ pu length. Setting the capacitor bank anywhere else on the feeder would decrease rather than increase the savings from loss reduction.

Some of the *cardinal rules* that can be derived for the application of capacitor banks include the following:

1. The location of fixed shunt capacitors should be based on the average reactive load.
2. There is only one location for each size of capacitor bank that produces maximum loss reduction.
3. One large capacitor bank can provide almost as much savings as two or more capacitor banks of equal size.
4. When multiple locations are used for fixed-shunt-capacitor banks, the banks should have the same rating to be economical.
5. For a feeder with a uniformly distributed load, a fixed capacitor bank rated at two-thirds of the total reactive load and located at two-thirds of the distance out on the feeder from the source gives an 89% loss reduction.
6. The result of the two-thirds rule is particularly useful when the reactive load factor is high. It can be applied only when fixed shunt capacitors are used.
7. In general, particularly at low reactive load factors, some combination of fixed and switched capacitors gives the greatest energy loss reduction.
8. In actual situations, it may be difficult, if not impossible, to locate a capacitor bank at the optimum location; in such cases the permanent location of the capacitor bank ends up being suboptimum.

6.1 Power Factor

The cosine of angle between voltage and current in an a.c. circuit is known as **power factor.**

In an a.c. circuit, there is generally a phase difference ϕ between voltage and current. The term cos ϕ is called the power factor of the circuit. If the circuit is inductive, the current lags behind the voltage and the power factor is referred

to as lagging. However, in a capacitive circuit, current leads the voltage and power factor is said to be leading.

Consider an inductive circuit taking a lagging current I from supply voltage V; the angle of lag being ϕ. The phasor diagram of the circuit is shown in Fig. 6.1. The circuit current I can be resolved into two perpendicular components, namely ;

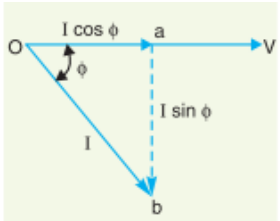

Fig. 6.1

(*a*) $I \cos \phi$ in phase with V

(*b*) $I \sin \phi$ 90° out of phase with V

The component $I \cos \phi$ is known as active or wattful component, whereas component $I \sin \phi$ is called the reactive or wattless component. The reactive component is a measure of the power factor. If the reactive component is small, the phase angle ϕ is small and hence power factor $\cos \phi$ will be high. Therefore, a circuit having small reactive current (*i.e.*, $I \sin \phi$) will have high power factor and *vice-versa*. It may be noted that value of power factor can never be more than unity.

(*i*) It is a usual practice to attach the word 'lagging' or 'leading' with the numerical value of power factor to signify whether the current lags or leads the voltage. Thus if the circuit has a p.f. of 0·5 and the current lags the voltage, we generally write p.f. as 0·5 lagging.

(*ii*) Sometimes power factor is expressed as a percentage. Thus 0·8 lagging power factor may be expressed as 80% lagging.

6.3 Disadvantages of Low Power Factor

The power factor plays an importance role in a.c. circuits since power consumed depends upon this factor.

$$P = V_L I_L \cos \phi \qquad \text{(For single phase supply)}$$

$$\therefore \quad I_L = \frac{P}{V_L \cos \phi} \qquad \ldots(i)$$

$$P = \sqrt{3}\, V_L I_L \cos \phi \qquad \text{(For 3 phase supply)}$$

$$\therefore \quad I_L = \frac{P}{\sqrt{3}\, V_L \cos \phi} \qquad \ldots(ii)$$

It is clear from above that for fixed power and voltage, the load current is inversely proportional to the power factor. Lower the power factor, higher is the load current and *vice-versa*. A power factor less than unity results in the following disadvantages :

(*i*) Large kVA rating of equipment. The electrical machinery (*e.g.*, alternators, transformers, switchgear) is always rated in *kVA.

Now, $$\text{kVA} = \frac{\text{kW}}{\cos \phi}$$

It is clear that kVA rating of the equipment is inversely proportional to power factor. The smaller the power factor, the larger is the kVA rating. Therefore, at low power factor, the kVA rating of the equipment has to be made more, making the equipment larger and expensive.

(*ii*) Greater conductor size. To transmit or distribute a fixed amount of power at constant voltage, the conductor will have to carry more current at low power factor. This necessitates

large conductor size. For example, take the case of a single phase a.c. motor having an input of 10 kW on full load, the terminal voltage being 250 V. At unity p.f., the input full load current would be 10,000/250 = 40 A. At 0·8 p.f; the kVA input would be 10/0·8 = 12·5 and the current input 12,500/250 = 50 A. If the motor is worked at a low power factor of 0·8, the cross-sectional area of the supply cables and motor conductors would have to be based upon a current of 50 A instead of 40 A which would be required at unity power factor.

(*iii*) Large copper losses. The large current at low power factor causes more I^2R losses in all the elements of the supply system. This results in poor efficiency.

(*iv*) Poor voltage regulation. The large current at low lagging power factor causes greater voltage drops in alternators, transformers, transmission lines and distributors. This results in the decreased voltage available at the supply end, thus impairing the performance of utilisation devices. In order to keep the receiving end voltage within permissible limits, extra equipment (*i.e.*, voltage regulators) is required.

(*v*) Reduced handling capacity of system. The lagging power factor reduces the handling capacity of all the elements of the system. It is because the reactive component of current prevents the full utilisation of installed capacity.

The above discussion leads to the conclusion that low power factor is an objectionable feature in the supply system

6.4 Causes of Low Power Factor

Low power factor is undesirable from economic point of view. Normally, the power factor of the whole load on the supply system in lower than 0·8. The following are the causes of low power factor:

(*i*) Most of the a.c. motors are of induction type (1ϕ and 3ϕ induction motors) which have low lagging power factor. These motors work at a power factor which is extremely small on light load (0·2 to 0·3) and rises to 0·8 or 0·9 at full load.

(*ii*) Arc lamps, electric discharge lamps and industrial heating furnaces operate at low lagging power factor.

(*iii*) The load on the power system is varying ; being high during morning and evening and low at other times. During low load period, supply voltage is increased which increases the magnetisation current. This results in the decreased power factor.

6.5 Power Factor Improvement

The low power factor is mainly due to the fact that most of the power loads are inductive and, therefore, take lagging currents. In order to improve the power factor, some device taking leading power should be connected in parallel with the load. One of such devices can be a capacitor. The capacitor draws a leading current and partly or completely neutralises the lagging reactive component of load current. This raises the power factor of the load.

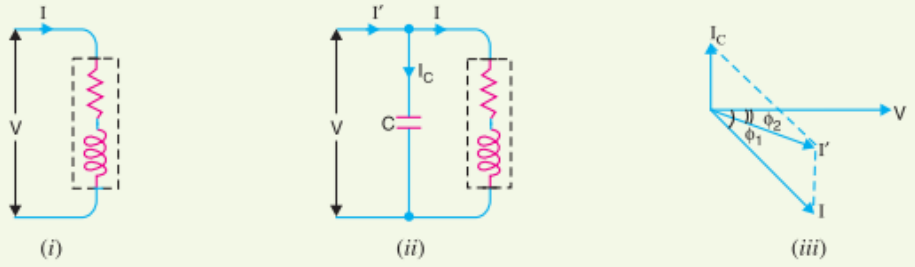

(*i*) (*ii*) (*iii*)

Fig. 6.3

Illustration. To illustrate the power factor improvement by a capacitor, consider a single *phase load taking lagging current I at a power factor $\cos \phi_1$ as shown in Fig. 6.3.

The capacitor C is connected in parallel with the load. The capacitor draws current I_C which leads the supply voltage by 90°. The resulting line current I' is the phasor sum of I and I_C and its angle of lag is ϕ_2 as shown in the phasor diagram of Fig. 6.3. (*iii*). It is clear that ϕ_2 is less than ϕ_1, so that $\cos \phi_2$ is greater than $\cos \phi_1$. Hence, the power factor of the load is improved. The following points are worth noting :

(*i*) The circuit current I' after p.f. correction is less than the original circuit current I.

(*ii*) The active or wattful component remains the same before and after p.f. correction because only the lagging reactive component is reduced by the capacitor.

$$\therefore \quad I \cos \phi_1 = I' \cos \phi_2$$

(*iii*) The lagging reactive component is reduced after p.f. improvement and is equal to the difference between lagging reactive component of load ($I \sin \phi_1$) and capacitor current (I_C) *i.e.*,

$$I' \sin \phi_2 = I \sin \phi_1 - I_C$$

(*iv*) As $\quad I \cos \phi_1 = I' \cos \phi_2$

$$\therefore \quad VI \cos \phi_1 = VI' \cos \phi_2 \qquad \text{[Multiplying by } V\text{]}$$

Therefore, active power (kW) remains unchanged due to power factor improvement.

(*v*)
$$I' \sin \phi_2 = I \sin \phi_1 - I_C$$

$$\therefore \quad VI' \sin \phi_2 = VI \sin \phi_1 - VI_C \qquad \text{[Multiplying by } V\text{]}$$

i.e., Net kVAR *after* p.f. correction = Lagging kVAR *before* p.f. correction – leading kVAR of equipment

6.6 Power Factor Improvement Equipment

Normally, the power factor of the whole load on a large generating station is in the region of 0·8 to 0·9. However, sometimes it is lower and in such cases it is generally desirable to take special steps to improve the power factor. This can be achieved by the following equipment :

1. Static capacitors. **2.** Synchronous condenser. **3.** Phase advancers.

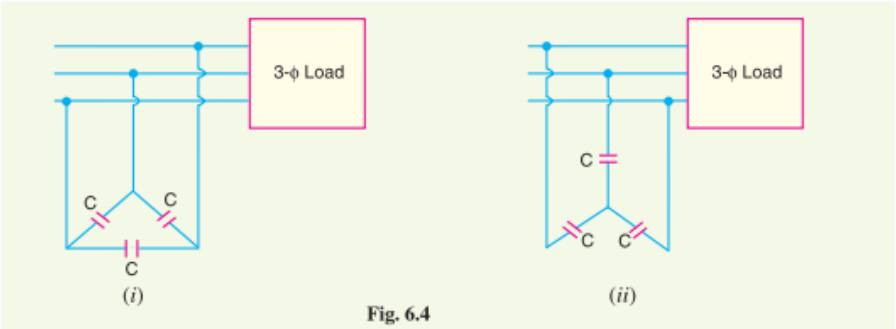

Fig. 6.4

1. Static capacitor. The power factor can be improved by connecting capacitors in parallel with the equipment operating at lagging power factor. The capacitor (generally known as static**

capacitor) draws a leading current and partly or completely neutralises the lagging reactive component of load current. This raises the power factor of the load. For three-phase loads, the capacitors can be connected in delta or star as shown in Fig. 6.4. Static capacitors are invariably used for power factor improvement in factories.

Advantages

(*i*) They have low losses.

(*ii*) They require little maintenance as there are no rotating parts.

(*iii*) They can be easily installed as they are light and require no foundation.

(*iv*) They can work under ordinary atmospheric conditions.

Disadvantages

(*i*) They have short service life ranging from 8 to 10 years.

(*ii*) They are easily damaged if the voltage exceeds the rated value.

(*iii*) Once the capacitors are damaged, their repair is uneconomical.

2. Synchronous condenser. A synchronous motor takes a leading current when over-excited and, therefore, behaves as a capacitor. An over-excited synchronous motor running on no load is known as *synchronous condenser.* When such a machine is connected in parallel with the supply, it takes a leading current which partly neutralises the lagging reactive component of the load. Thus the power factor is improved.

Fig 6.5 shows the power factor improvement by synchronous condenser method. The 3ϕ load takes current I_L at low lagging power factor cos ϕ_L. The synchronous condenser takes a current I_m which leads the voltage by an angle ϕ_m*. The resultant current I is the phasor sum of I_m and I_L and lags behind the voltage by an angle ϕ. It is clear that ϕ is less than ϕ_L so that cos ϕ is greater than cos ϕ_L. Thus the power factor is increased from cos ϕ_L to cos ϕ. Synchronous condensers are generally used at major bulk supply substations for power factor improvement.

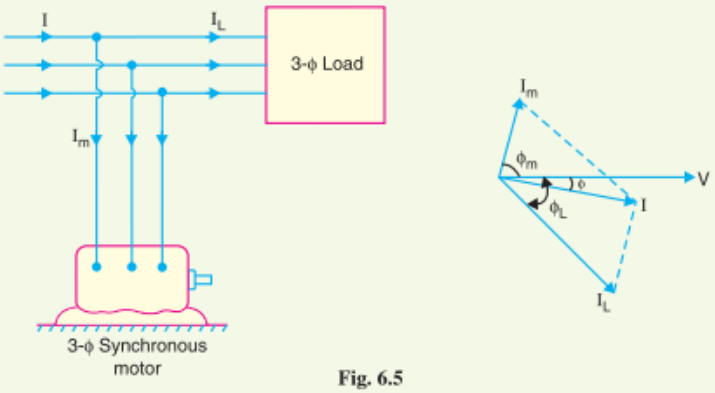

Fig. 6.5

Advantages

(*i*) By varying the field excitation, the magnitude of current drawn by the motor can be changed by any amount. This helps in achieving stepless † control of power factor.

(*ii*) The motor windings have high thermal stability to short circuit currents.

(*iii*) The faults can be removed easily.

Disadvantages

(*i*) There are considerable losses in the motor.

(*ii*) The maintenance cost is high.

(*iii*) It produces noise.

(*iv*) Except in sizes above 500 kVA, the cost is greater than that of static capacitors of the same rating.

(*v*) As a synchronous motor has no self-starting torque, therefore, an auxiliary equipment has to be provided for this purpose.

Note. The reactive power taken by a synchronous motor depends upon two factors, the d.c. field excitation and the mechanical load delivered by the motor. Maximum leading power is taken by a synchronous motor with maximum excitation and zero load.



Synchronous Condenser



Static Capacitor

3. Phase advancers. Phase advancers are used to improve the power factor of induction motors. The low power factor of an induction motor is due to the fact that its stator winding draws exciting current which lags behind the supply voltage by 90°. If the exciting ampere turns can be provided from some other a.c. source, then the stator winding will be relieved of exciting current and the power factor of the motor can be improved. This job is accomplished by the phase advancer which is simply an a.c. exciter. The phase advancer is mounted on the same shaft as the main motor and is connected in the rotor circuit of the motor. It provides exciting ampere turns to the rotor circuit at slip frequency. By providing more ampere turns than required, the induction motor can be made to operate on leading power factor like an over-excited synchronous motor.

Phase advancers have two principal advantages. Firstly, as the exciting ampere turns are supplied at slip frequency, therefore, lagging kVAR drawn by the motor are considerably reduced. Secondly, phase advancer can be conveniently used where the use of synchronous motors is unadmissible. However, the major disadvantage of phase advancers is that they are not economical for motors below 200 H.P.

6.7 Calculations of Power Factor Correction

Consider an inductive load taking a lagging current I at a power factor cos ϕ_1. In order to improve the power factor of this circuit, the remedy is to connect such an equipment in parallel with the load which takes a leading reactive component and partly cancels the lagging reactive component of the load. Fig. 6.6 (*i*) shows a capacitor connected across the load. The capacitor takes a current I_C which leads the supply voltage V by 90°. The current I_C partly cancels the lagging reactive component of the load current as shown in the phasor diagram in Fig. 6.6 (*ii*). The resultant circuit current becomes I' and its angle of lag is ϕ_2. It is clear that ϕ_2 is less than ϕ_1 so that new p.f. cos ϕ_2 is more than the previous p.f. cos ϕ_1.

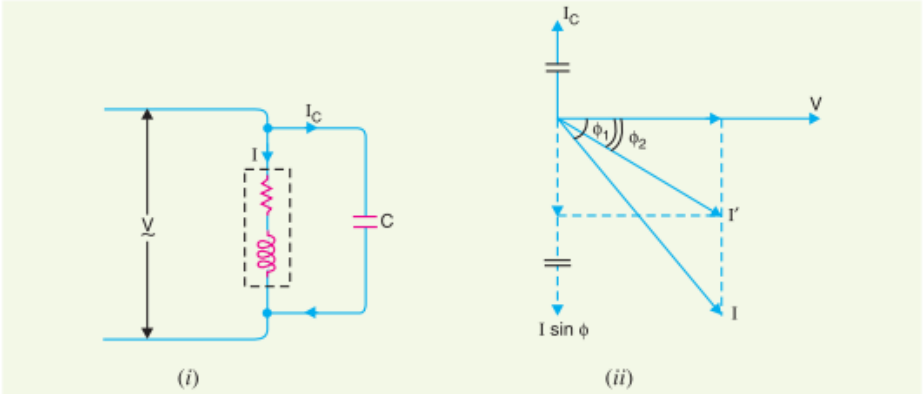

Fig. 6.6

From the phasor diagram, it is clear that after p.f. correction, the lagging reactive component of the load is reduced to $I' \sin \phi_2$.

Obviously, $I' \sin \phi_2 = I \sin \phi_1 - I_C$

or $I_C = I \sin \phi_1 - I' \sin \phi_2$

$\therefore$ Capacitance of capacitor to improve p.f. from cos ϕ_1 to cos ϕ_2

$$= \frac{I_C}{\omega V} \qquad \left(\because X_C = \frac{V}{I_C} = \frac{1}{\omega C}\right)$$

Power triangle. The power factor correction can also be illustrated from power triangle. Thus referring to Fig. 6.7, the power triangle OAB is for the power factor cos ϕ_1, whereas power triangle OAC is for the improved power factor cos ϕ_2. It may be seen that active power (OA) does not change with power factor improvement. However, the lagging kVAR of the load is reduced by the p.f. correction equipment, thus improving the p.f. to cos ϕ_2.

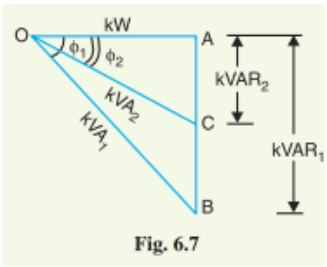

Fig. 6.7

Leading kVAR supplied by p.f. correction equipment

$= BC = AB - AC$

$= \text{kVAR}_1 - \text{kVAR}_2$

$= OA (\tan \phi_1 - \tan \phi_2)$

$= \text{kW} (\tan \phi_1 - \tan \phi_2)$

Knowing the leading kVAR supplied by the p.f. correction equipment, the desired results can be obtained.

Example 6.5 *A 3-phase, 50 Hz, 400 V motor develops 100 H.P. (74·6 kW), the power factor being 0·75 lagging and efficiency 93%. A bank of capacitors is connected in delta across the supply terminals and power factor raised to 0·95 lagging. Each of the capacitance units is built of 4 similar 100 V capacitors. Determine the capacitance of each capacitor.*

Solution :

Original p.f., $\cos \phi_1 = 0{\cdot}75$ lag ; Final p.f., $\cos \phi_2 = 0{\cdot}95$ lag

Motor input, P = output/η = 74·6/0·93 = 80 kW

$\phi_1 = \cos^{-1}(0{\cdot}75) = 41{\cdot}41^\circ$

$\tan \phi_1 = \tan 41{\cdot}41^\circ = 0{\cdot}8819$

$\phi_2 = \cos^{-1}(0{\cdot}95) = 18{\cdot}19^\circ$

$\tan \phi_2 = \tan 18{\cdot}19^\circ = 0{\cdot}3288$

Leading kVAR taken by the condenser bank

$= P(\tan \phi_1 - \tan \phi_2)$

$= 80\,(0{\cdot}8819 - 0{\cdot}3288) = 44{\cdot}25$ kVAR

Leading kVAR taken by each of three sets

$= 44{\cdot}25/3 = 14{\cdot}75$ kVAR ... (*i*)

Fig. 6.11 shows the delta* connected condenser bank. Let C farad be the capacitance of 4 capacitors in each phase.

Phase current of capacitor is

$$I_{CP} = V_{ph}/X_C = 2\pi f C V_{ph}$$
$$= 2\pi \times 50 \times C \times 400$$
$$= 1{,}25{,}600\ C \text{ amperes}$$

$$\text{kVAR/phase} = \frac{V_{ph}\, I_{CP}}{1000}$$
$$= \frac{400 \times 1{,}25{,}600\ C}{1000}$$
$$= 50240\ C \quad \text{... (}ii\text{)}$$

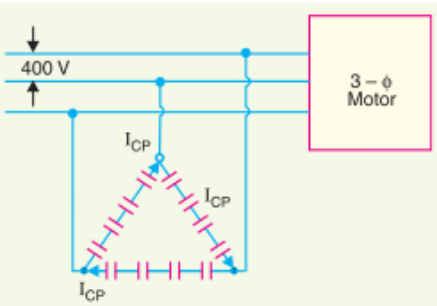

Fig. 6.11

Equating exps. (*i*) and (*ii*), we get,

$$50240\ C = 14{\cdot}75$$

$\therefore$ $C = 14{\cdot}75/50{,}240 = 293{\cdot}4 \times 10^{-6}$ F = 293·4 μ F

Since it is the combined capacitance of four equal capacitors joined in series,

$\therefore$ Capacitance of each capacitor = 4 × 293·4 = **1173·6 μF**

2 MARKS QUESTIONS AND ANSWERS

1. What are the differences between fixed and switched capacitors?

(June 2017-SUPPLE(R13)

Ans: A fixed capacitor is constructed in such manner that it possesses a fixed value of capacitance which cannot be adjusted. A fixed capacitor is classified according to the type of material used as its dielectric, such as paper, oil, mica, or electrolyte.

A switched capacitor is an electronic circuit element used for discrete-time signal processing. It works by moving charges into and out of capacitors when switches are opened and closed. Usually, non-overlapping signals are used to control the switches, so that not all switches are closed simultaneously.

2. Write short notes on power factor correction **(November/December 2016-REG(R13))**

.

Ans: **Methods of Power Factor Improvement**

Capacitors: Improving power factor means reducing the phase difference between voltage and current.

Synchronous Condenser: The 3 phase synchronous motor with no load attached to its shaft.

Phase Advancer: This is an ac exciter mainly used to improve pf of induction motor.

3. Draw the phasor diagram of shunt compensation

(November/December 2016-REG(R13))

.

Ans:

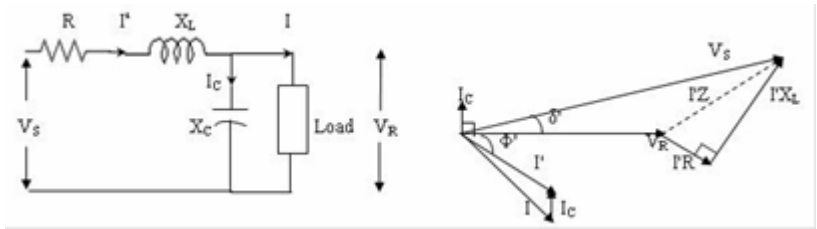

Figure: Single line diagram of a shunt compensated transmission line and its phasor diagram

4. Write the two-third rule for locating the shunt capacitors in distribution systems.

Ans:

$$C_T = \frac{2n}{2n+1} F_{LD^1}$$

It can be observed that if the total number of capacitor banks approaches infinity, then the optimum total capacitor rating becomes equal to the reactive load factor. If only one capacitor bank is used ,the optimum capacitor rating to provide for the maximum energy loss reduction is

$$C_{T=\frac{2}{3}} \; F_{LD^1}$$

This equation gives the two-third rule for locating the fixed shunt capacitors in distribution systems.

5. What are the causes of low power factor?

Ans:1. Most of the a.c. motors are of induction type (1φ and 3φ induction motors) which have low lagging power factor. These motors work at a power factor which is extremely small on Light load (0·2 to 0·3) and rises to 0·8 or 0·9 at full load.

2. Arc lamps, electric discharge lamps and industrial heating furnaces operate at low lagging power factor.

3. The load on the power system is varying ; being high during morning and evening and low at other times. During low load period, supply voltage is increased which increases the magnetisation current. This results in the decreased power factor.

6. What are the disadvantages of low power factor?

Ans:1. Large copper losses. 2. Poor voltage regulation. 3. Greater conductor size.
4. Large kVA rating of equipment.

7. What is a synchronous condenser?

Ans: An over-excited synchronous motor running on no load is known as synchronous condenser.

8. What is most economical power factor?

Ans: The value to which the power factor should be improved so as to have maximum net saving is known as the most economical power factor.

9. How will you meet the Increased kW Demand on Power Stations

Ans:1. By increasing the kVA capacity of the power station at the same power factor (say cos φ1). Obviously, extra cost will be incurred to increase the kVA capacity of the station.

2. By improving the power factor of the station from cos φ1 to cos φ2 without increasing the kVA capacity of the station. This will also involve extra cost on account of powerfactor correction equipment.

10. What are series capacitors and shunt capacitors?

Ans: Series capacitors, that is, capacitors connected in series with lines, have been used to a very limited extent on distribution circuits due to being a more specialized type of apparatus with a limited range of application.

Shunt capacitors, that is, capacitors connected in parallel with lines, are used extensively in distribution systems.

11. What is series compensation?

Ans: Series compensation is the method of improving the system voltage by connecting a capacitor in series with the transmission line. In other words, in series compensation, reactive power is inserted in series with the transmission line for improving the impedance of the system. It improves the power transfer capability of the line. It is mostly used in extra and ultra high voltage line.

12. What are the advantages of series compensation

Ans: Series compensation has several advantages like it increases transmission capacity, improve system stability, control voltage regulation and ensure proper load division among parallel feeders.

13. What is shunt compensation?

Ans: At buses where reactive power demand increases, bus voltage can be controlled by connecting capacitor banks in parallel to a lagging load.

Capacitor banks supply part of or full reactive power of load, thus reducing magnitude of the source current necessary to supply load. Consequently the voltage drop between the sending end and the load gets reduced, power factor will be improved and increased active power output will be available from the source.

14. What is the power loss due to load currents in the conductors of the single phase two-wire uni-grounded lateral with full capacity neutral?

Ans: The power loss due to load currents in the conductors of the single phase two-wire uni-grounded lateral with full capacity neutral is six times larger than the one in the equivalent three phase four-wire lateral.

$$P_{LS,1\phi} = 6\, P_{LS,3\phi}$$

15. What is the voltage drop in the single phase two-wire uni-grounded lateral with full capacity neutral?

Ans: The voltage drop in the single phase two-wire uni-grounded lateral with full capacity neutral is six times larger than the one in the equivalent three phase four-wire lateral

16. What is the power loss due to load currents in the conductors of the single phase lateral ?

Ans: The power loss due to load currents in the conductors of the single phase lateral is two times larger than the one in the equivalent three phase lateral.

17. What is the voltage drop in the single phase ungrounded lateral ?

Ans: The voltage drop in the single phase ungrounded lateral is approximately 3.46 times larger than the one in the equivalent three phase lateral.

18. What is a capacitor bank?

Ans: A total assembly of capacitor modules electrically connected to each other.

19. What are the connections of a Three-Phase capacitor Bank connections?

Ans: A three phase capacitor bank on a distribution feeder can be connected in(1)delta, (2)grounded-wye, or (3)ungrounded-wye.

20. What are the economic benefits that can be derived from capacitor installation?

Ans: 1.Released generation capacity.

2. Released transmission capacity.
3. Released distribution substation capacity.
4.Reduced energy(copper)losses
5.Reduced voltage drop and consequently improved voltage regulation.

10 MARKS QUESTIONS

1.(A) Explain the manual method of solution for radial distribution system(November/December 2016-REG(R-13)

(B) Derive the equation for load power factor for which the voltage drop is maximum

2. A 3 Phase, 500 H.P, 50 Hz, 11 kV star connected induction motor has a full load efficiency of 85% at a lagging p.f. of 0.75 and connected to a feeder. If it is desired to correct it to a p.f. of 0.9 lagging load. Determine the following: (i) The size of the capacitor bank. (ii) The capacitance of each unit if the capacitors are connected in star as well as delta.

(November/December 2016-REG(R-13)

3. (A) Explain the procedure employed to determine the best capacitor location. (June 2017-SUPPLE(R-13))

(B)A 40 kW induction motor has power factor 0.95 and efficiency 0.85 at full1oad, power factor 0.7 and efficiency 0.65 at half-load. At no-load, the current is 20% of the full-load current and power factor 0.2. Capacitors are supplied to make the line power factor 0.9 at half-load. With these capacitors in circuit, find the line power factor at: (i) Full load. (ii) No-load.

4.(A) Explain the role of shunt and series capacitors in power factor correction. Compare their performance in power factor correction. (June 2017-SUPPLE(R-13))

(B)Discuss the need of power factor improvement in distribution system.

5.(A) Explain the effect of shunt compensation on distribution system. (June 2017-SUPPLE(R-09))

(B) A synchronous motor improves the power factor of a load of 300 kW from 0.8 lagging to 0.9 lagging. Simultaneously the motor carries a load of 150 kW. Determine: (i) The leading kVAR taken by the motor. (ii) kVA rating of the motor. (iii) Power factor at which the motor operates.

6. Show that power loss due to load currents of the two phase, 3 wire lateral with full capacity neutral is exactly equal to 2.25 times larger than the one in which equivalent three phase lateral is used. Also prove that VD pu, 2 =2.1xVDpu, 3 for the above system. (November 2012-REG-(R09))

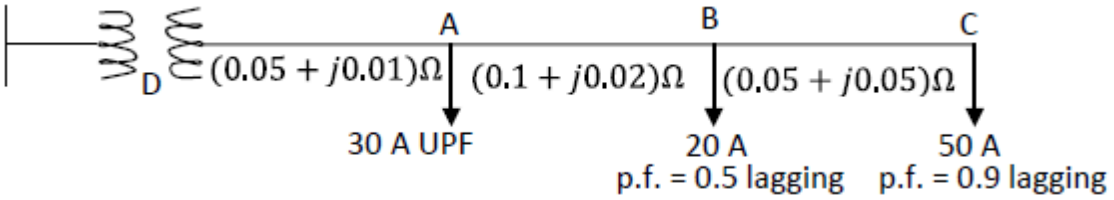

7. Consider a three phase, 3 wire, 440 V secondary system with balanced loads at A, B and C shown in figure. Determine: (December/January 2013/14-REG(R09))

(i) Total voltage drop.

(ii) Real power / phase for each load.

(iii) Reactive power / phase for each load.

(iv) The kVA output and load p.f. of the distribution transformer

8.(A) Explain the disadvantages of low power factor.

(B) A single-phase motor connected to a 240V, 50 Hz supply takes 20 A at p.f. of 0.75 lag. A capacitor is shunted across the motor terminals to improve the p.f to 0.9 lag. Determine the capacitance of the capacitor to be used.

EDSA

UNIT 5

DISTRIBUTION AUTOMATION

Distribution automation, distribution management systems, distribution automation system functions, Basic SCADA system, outage management, decision support applications, substation automation, control feeder automation, database structures and interfaces.

Distribution automation:

WHY DISTRIBUTION AUTOMATION? :

Distribution companies implementing distribution automation (DA) are receiving benefits from many areas such as providing a fast method of improving reliability, making the whole operating function more efficient, or simply extending asset life. Acceptance of distribution automation across the distribution industry is varied and not universal, due to the limited benefit-to-cost ratios of the past. The legacy of past management perceptions that more efficient control of distribution networks was neither required nor a worthwhile investment and is changing as a result of deregulation and the industry's experience with new, cost-effective control systems. Automation is first implemented at the top of the control hierarchy where integration of multifunctions gains efficiencies across the entire business. Implementation of downstream automation systems requires more difficult justification and it is usually site specific, being targeted to areas where improved performance produces measurable benefits. The benefits demonstrated through automating substations are now being extended outside the substation to devices along the feeders and even down to the meter. The utilities implementing DA have produced business cases* supported by a number of real benefits selected to be appropriate to their operating environment. The key areas of benefits down the control hierarchy† are summarized in Table 1.1.

TABLE 1.1
Key Automation Benefit Classifications by Control Hierarchy Layer

Control Hierarchy Layer	Reduce O&M	Capacity Project Deferrals	Improved Reliability	New Customer Services	Power Quality	Better Info for Engr. & Planning
1. Utility	✓			✓		✓
2. Network	✓	✓	✓		✓	✓
3. Substation	✓	✓	✓		✓	✓
4. Distribution	✓	✓	✓		✓	✓
5. Customer	✓	✓	✓	✓	✓	✓

Reduced Operation and Maintenance (O&M) Costs:

Automation reduces operating costs across the entire utility, whether from improved management of information at the utility layer or from the automatic development of switching plans with a distribution management system (DMS) at the network layer. At the substation and distribution layers, fast fault location substantially reduces crew travel times, because crews can be dispatched directly to the faulted area of the network. Time-consuming traditional fault location practices using line patrols in combination with field operation of manual switches and the feeder circuit breaker in the primary substation are eliminated. Automation can be used to reduce losses, if the load characteristics justify the benefit, by regularly remotely changing the normally open points (NOPs) and dynamically controlling voltage. Condition monitoring of network elements through real-time data access in combination with an asset management system allows advanced condition and reliability-based maintenance practices to be implemented. Outages for maintenance can be optimally planned to reduce their impact on customers.

1.5 WHAT IS DISTRIBUTION AUTOMATION?

The utility business worldwide has many perceptions of what is distribution automation, ranging from its use as an umbrella term covering the entire control process of the distribution enterprise to the deployment of simple remote control and communication facilities retrofitted to existing devices. Thus, for clarity, the umbrella term will be treated as the DA concept under which the other generally used terms of distribution management systems and distribution automation systems will be treated.

1.5.1 DA Concept

The DA concept simply applies the generic word of automation to the entire distribution system operation and covers the complete range of functions from protection to SCADA and associated information technology applications. This concept melds together the ability to mix local automation, remote control of switching devices, and central decision making into a cohesive, flexible, and cost-effective operating architecture for power distribution systems. This is shown pictorially in Figure 1.6.

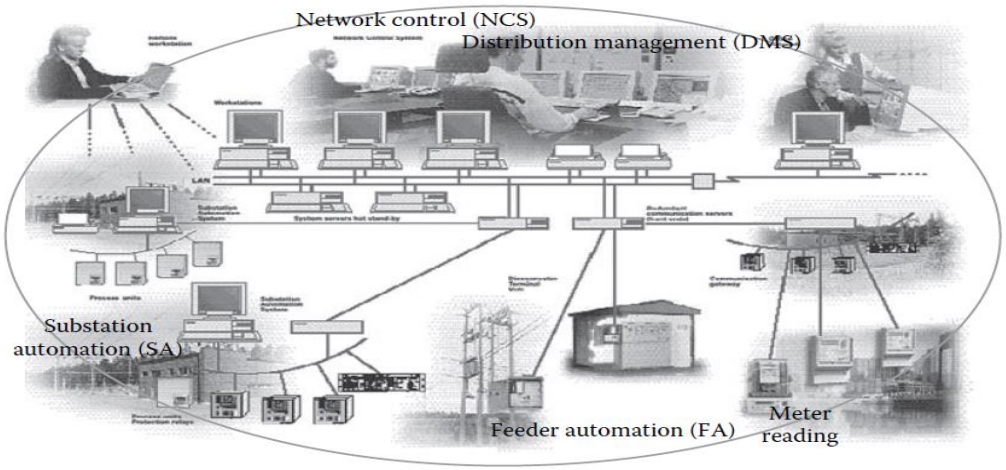

FIGURE 1.6 Distribution concept as an umbrella term. (Courtesy of ABB.)

In practice, within the DA concept there are two specific terms that are commonly used in the industry.

Distribution Management System. The DMS has a control room focus, where it provides the operator with the best "as operated" view of the network. It coordinates all the downstream real-time functions within the distribution network with the nonreal-time (manually operated devices) information needed to properly control and manage the network on a regular basis. The key to a DMS is the organization of the distribution network model database, access to all supporting IT infrastructure, and applications necessary to populate the model and support the other daily operating tasks. A common HMI* and process optimized command structure is vital in providing operators with a facility that allows intuitive and efficient performance of their tasks.

Distribution Automation System. The DA system fits below the DMS and includes all the remote-controlled devices at the substation and feeder levels (e.g., circuit breakers, reclosers, autosectionalizers), the local automation distributed at these devices, and the communications infrastructure. It is a subsystem of the DMS essentially covering all real-time aspects of the downstream network control process. This book concentrates on this aspect of distribution control and automation; thus, a more detailed discussion of automation at this level is appropriate.

1.6 DISTRIBUTION AUTOMATION SYSTEM

Distribution automation covers a wide range of implementations, from simple retrofitted remote control, or the application of highly integrated intelligent devices, to the installation of complete systems. The term *automation* itself suggests that the process is self-controlling. The electrical power industry has adopted the following definition:

> A set of technologies that enable an electric utility to remotely monitor, coordinate and operate distribution components in a real-time mode from remote locations.*

Interestingly, this definition does not mention an automatic function. This has to be inferred in the word *coordinate*. All protective devices must be coordinated to automatically perform the protection function satisfactorily by correct discriminatory isolation of the fault. Isolating the fault is only a portion of the possible functions of DA, because operation of the network would be improved if, having isolated the fault, as much of the healthy network as possible was re-energized. Further, the term *real-time* suggests that the automation system will operate in the 2-second response time frame typical in large SCADA control. This is overly ambitious for some parts of the distribution network where communication delays are significant. It is also not necessary or cost-effective for all DA functions where response times can be on a demand or demand interval basis. The terms of either *real-time* or *demand-time* provide flexibility to implement response times appropriate to achieving the operating goals for the network in a cost-effective manner. The one statement in the definition that differentiates DA from traditional protection-based operation (automatic) is that the relevant distribution components can be controlled from a remote location. This then necessitates integration of a communication infrastructure within the DA architecture. This is the key critical facility that offers increased information and control to the decision making required for smarter operation of the distribution network. Implementation and cost-effective integration of communications within the controlled distribution device and central control must be carefully planned.

DA, as stated earlier, also supports the central control room applications that facilitate the operations decision-making process for the entire distribution network of remotely controlled and manually operated devices — applications that are incumbent within the distribution management system. The number of the distribution assets not under remote control is in the majority for any distribution network. The proper management of these assets is vital to the business and requires the added facility offered within a DMS. These applications require support from corporate process systems such as the customer information system (CIS) and the geographical information system (GIS), which reside at the top layer of the control hierarchy.

Irrespective of which of the two control layers DA is applied to, there are three different ways to look at automation:

1. Local automation — switch operation by protection or local logic-based decision-making operation
2. SCADA (telecontrol) — manually initiated switch operation by remote control with remote monitoring of status, indications, alarms, and measurements
3. Centralized automation — automatic switch operation by remote control from central decision making for fault isolation, network reconfiguration, and service restoration

Any DA implementation will include at least two of these functions because communications must be a part of the implementation. There are, though, utilities that will claim to have operational distribution automation due to their early implementation of reclosers without or in combination with self-sectionalizing switches. The absence of communication to these devices does not fulfill the accepted definition of DA. Many utilities with such implementation do admit the need to have communication to these switching devices in order to know whether or not the device has operated.

Automation Decision Tree. The selection of the ways to automate a switching device can be illustrated through the decision tree in Figure 1.7. Once the primary device has been selected based on its required power delivery and protection duty in the distribution network, the degree of automation can be determined.

The implementation of automation to any manual switch can be described as a number of steps and alternative paths that lead to the degree and type of the control architecture. Some of the paths are optional but many are obligatory if automation is to be implemented.

Step 1: This is the basic step to provide a switch with a mechanical actuator, without which nonmanual operation would not be possible. Historically, switches have always been operated manually, but stored energy devices or powered actuators have been added to ensure that switch operation is independent of the level of manual effort and to provide consistency in operating speed. Safety is increased because the operator tends to be further away from the switch.

Step 2: Although the installation of an actuator will allow local manual operation, which is mandatory, simply by using pushbuttons, the main purpose is to facilitate the operation by local automation or by remote control.

Step 3: Once an electronic control unit has been installed for the actuator, one of the two main automation functions can now be selected. In the most simple choice at this step, the local automation can be interfaced to a communications system to allow control remotely. Alternatively, local intelligence can be implemented, allowing the device to operate automatically under some preset arrangement. A typical example of this alternative at step 3 would be a recloser without communications.

Step 4: This step builds on the two choices made at the previous step. Basically, remote control is added to local automation so that the operator will be informed of any operation of the device under local automation and can either suppress this local action or make the decision remotely. Local manual operation to override the intelligence is a mandatory feature. In the alternative path in step

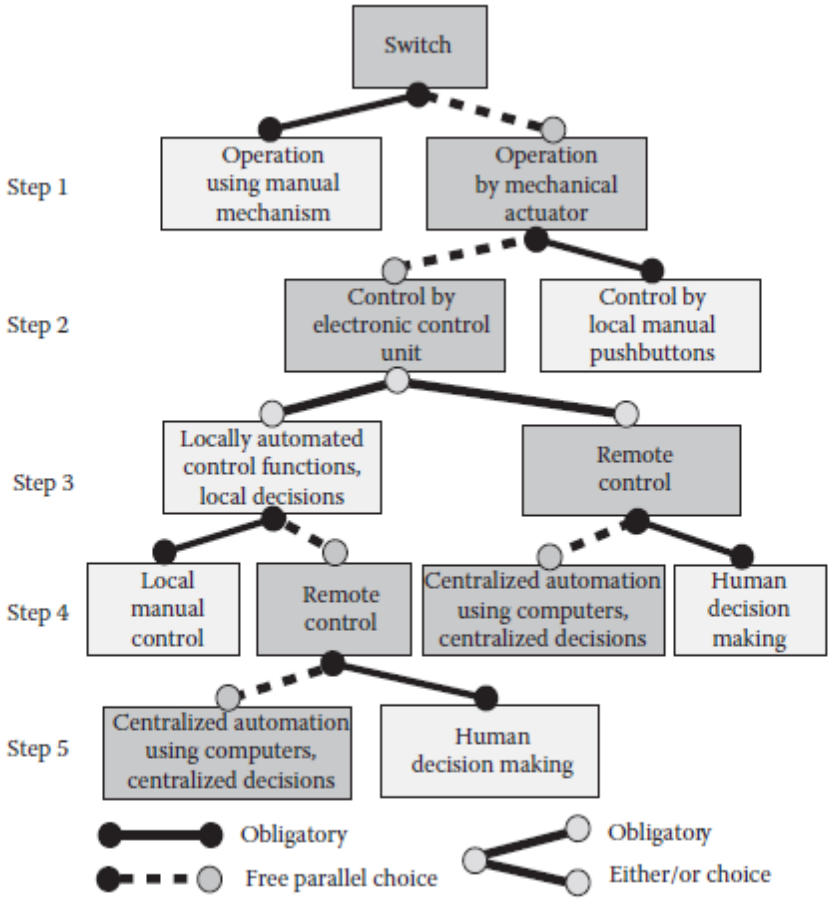

FIGURE 1.7 Decision tree showing the logical steps to the implementation of local or central automation of a primary switch.

3, where remote control was selected, two forms of decision making are possible, either a remotely located central process that incorporates a systemwide perspective or manually initiated remote control (human decision making).

Step 5: The final step applies the same options from step 4, remote control to the local automation. Although the ability to add central decision making to local automation offers the most advanced automation strategy, it is not commonly practiced because it is found sufficient and simpler to use remote control of intelligent devices.

The results of this decision tree in terms of meeting the basic definition of distribution automation are as follows:

- Switches must have remote-control operation capability.
- Decision making is implemented, either located locally in intelligent secondary devices (IEDs) centrally in a DA server, in combination with both local and central decision making or through human intervention remotely.
- Local operation must be possible either mechanically or by pushbutton.

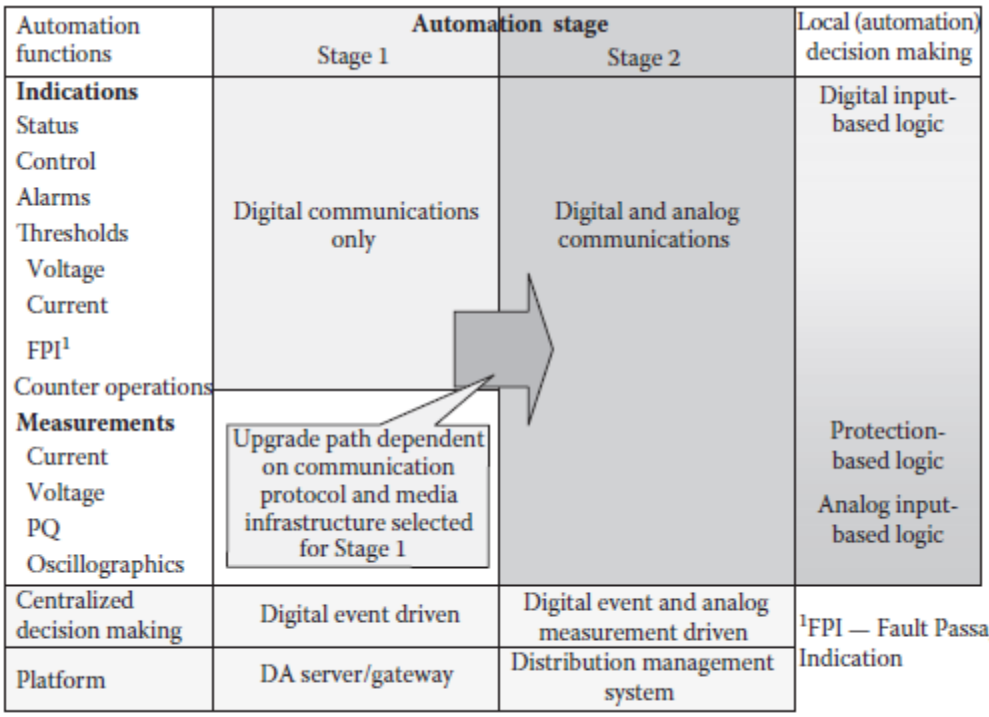

FIGURE 1.8 Stages of distribution automation for extended control.

Stages of Automation. The selection of automation level illustrated through the decision tree in the previous section can be viewed from a different perspective, taking into account the burden on the communication media. The more sophisticated the remote monitoring and automation requirements, the higher the burden and complexity of the messaging. This consideration has given rise to two different approaches to distribution automation (Figure 1.8), particularly for extended control down the feeder, where communications are predominantly radio based.

Stage 1: This is designated as meeting the basic requirements of distribution automation providing remote status and control functions. Remote status indication and control of switches has been the most justifiable stage of implementation of distribution automation outside the substation. This can be achieved by transmission of digital signals only. Other binary information such as alarms, FPI contact closing, and values above or below a threshold can be communicated digitally. Communication of digital values significantly lessens the complexity of the communication by reducing the data package length. Low-power radio systems have been developed and deployed to meet the needs of basic remote control.

Stage 2: This stage adds the transmission of analog measurements to status and control commands. This additional information moves the functionality of extended control close to that employed at the substation level; however, the burden on communications is increased and the capability of protocols used by

full SCADA systems is required. To reduce this burden, high-level protocols must have both unsolicited reporting by exception* and dial-up† capability.

Local automation can be applied under both stages and is only dependent on the sophistication of the power sensors and the IED. The restriction of only reporting status does not interfere with an analog/protection-based local decision process.

The degree of central decision making will depend on not only the amount and detail of the information passed to the server but the data transmission speed capabilities of the communication infrastructure.

There is not necessarily a natural upgrade path from one stage to another, because there could be a limitation in the protocol and communication infrastructure as a result of optimization for stage 1. The selection of the infrastructure for the first stage must consider whether an upgrade to stage 2 will be required within the payback period of the implementation.

Automation Intensity Level (AIL). AIL is a term employed to define the penetration of automation along the feeder system outside the substation. Two measures are commonly used: either the percentage of the number of manual switches placed under remote control, typically 5–10%, or the number of switches automated per feeder. Typically, the latter is designated as 1.0, 1.5, 2.0, 2.5, etc., where the half switch represents the normally open point shared by two feeders. One and a half switches per feeder denotes automating the open point and a midfeeder switch — an AIL that produces maximum improvement for the investment, because increasing AIL produces reducing marginal improvements to system performance. This is illustrated in Figure 1.9 for a set of actual feeders, the AIL being shown in both types of measure described above. A definite breakpoint occurs around an AIL of 1.5.

Distribution Automation in Brief:

It is an integrated system concept for the digital automation of distribution sub-station, feeder and user functions. It includes control, monitoring and protection of the distribution system, load management and remote metering of consumer loads.

The distribution automation contains:

- Computer Hardware
- Computer Software
- Remote Terminal Units (RTUs)
- Communication Systems
- Consumer Metering Devices.

The benefits of DA are:

- Improved quality of supply
- Improved continuity of supply
- Voltage level stability
- Reduced system losses
- Reduced investment

The distribution automation system provides automatic reclosing of relays, automatic feeder switching and provides remote monitoring and controlling of distribution equipment (transformers, capacitors, breakers, sectionalizers, communication nodes etc.) from sub-station up to and including the consumer interface. It affords the utility in minimizing outage time and ultimately, better consumer service and lowering of the total delivered cost of electricity. It allows operation of the system with less capacity margin. The technical aspects of distribution automation are complex and need a thorough examination for their planning.

The various functions DA can be:

- Electrical network analysis
- Work management
- Trouble call analysis
- Consumer load monitoring
- Intelligent remote metering e.g. automatic meter reading etc.
- Automated capacitor control
- Sub-station automation
- Intelligent electric devices
- Advanced remote terminal units
- Computerized power distribution relays
- Power quality monitoring
- Automated Mapping (AM)/Facilities Management (FM)/Geographical Information System (GIS).
- Energy Management

1.7 BASIC ARCHITECTURES AND IMPLEMENTATION STRATEGIES FOR DA

1.7.1 ARCHITECTURE

The basic architecture for distribution automation comprises three main components: the device to be operated (usually an intelligent switch), a communication system, and a gateway often referred to as the DA gateway — Figures 1.10a and 1.10b.

This configuration can be applied to both substation and feeder automation. In primary substation applications, the gateway is the substation computer capturing and managing all the data from protective devices and actuators in the switchgear bays. It replaces the RTU as the interface to the communication

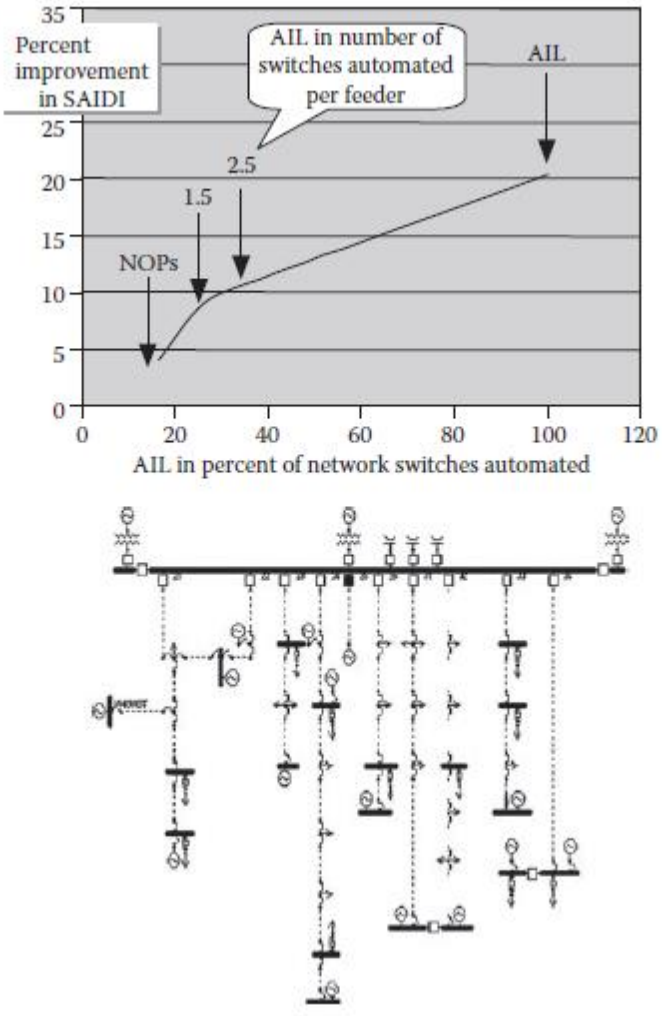

FIGURE 1.9 Marginal outage duration improvement with increase in AIL

system, which receives and sends information to the central control. Similarly, in feeder automation applications, the gateway manages the communication to multiple intelligent switches, acting as regards central control as a data concentrator. This, in effect, creates virtual locations for each switch and relieves central control of the need to establish every switch as a control point. The latter configuration is, of course, possible and used for automation where a few switches are remotely controlled, hybrid configurations where the substation computer or, in cases where there is no substation automation, the substation RTU acts as the gateway for all switches located on feeders emanating from the substation. The gateway can also be used to establish local areas of control where a more optimum communication infrastructure for extended control can be established separately from the SCADA system. The gateway becomes the conversion point from one infrastructure (protocol and communication system) to another. The gateway can also be extended from a simple data concentrator to one with limited graphical

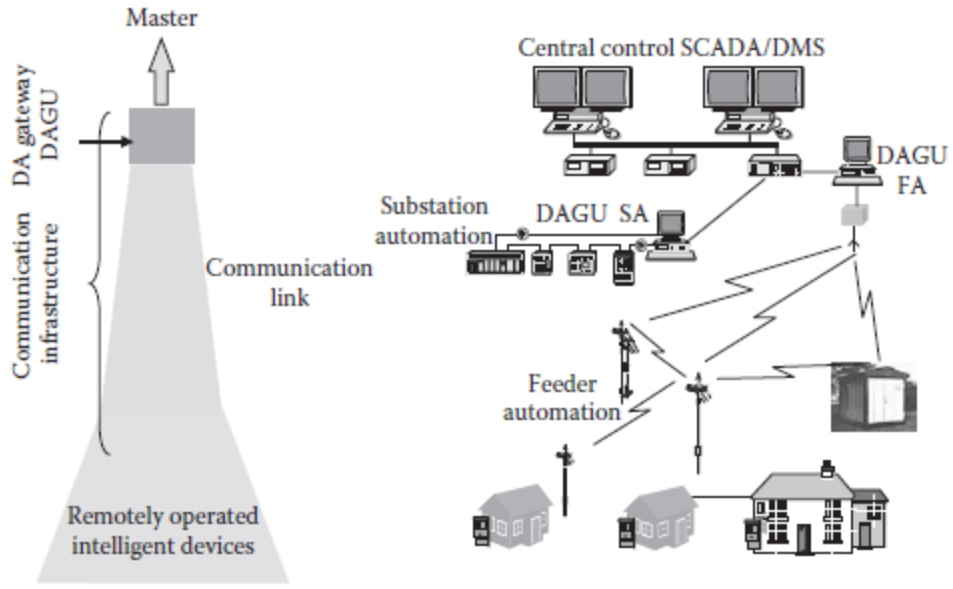

(a) Generalized architecture (b) Typical distribution automation components

FIGURE 1.10 (a) Generalized architecture and (b) major components of a DA system. (Courtesy of ABB.)

user interface to allow local control or even communicating selected information to multiple masters.

1.8 DEFINITIONS OF AUTOMATED DEVICE PREPAREDNESS

The implementation of DA is not only a function of the architecture and the level of automation required by the business case, but it is also influenced by the procurement practices at the distribution level. Distribution equipment has always been considered a volume product or component business rather than a system business. This has driven the procurement of DA to the component level in the majority of cases, particularly at the feeder level. Utilities tender for separate components such as IEDs to be installed in control cabinets, switches with actuators and a specified IED, communications (low-power radio, GSM, etc.). Each device must comply with an inferred system specification such as communication protocol and satisfactory operation over a particular communication medium. In addition, it may be required that the devices operate satisfactorily with the installed (legacy) SCADA system that will provide the control interface. Correctly configured and prepared devices allow the utility to implement independently the whole DA project. Application of this concept in an industry where standards are limited and where extension to the standards has been allowed resulted in many interoperability errors between components from different suppliers, which have to be resolved in the field. In system supply contracts such as a large SCADA system, a significant part of any system is configured in the factory and undergoes FAT* before shipping to the field for installation and SAT.† This procedure is not possible if a component procurement procedure is used, because the utility has taken the system responsibility. To avoid interoperability problems, pilot or proof-of-concept projects are used to iron out any incompatibilities. This allows the utility to select a number of devices that have been verified within the selected DA infrastructure for volume component procurement.

Interoperability errors can be reduced if a more precise definition of the preparedness of a device is made. The following levels of preparedness are proposed.

- *Automation infeasible device (AID)* — This describes a primary device for which it is either technically or economically infeasible to install an actuator for remote control. It applies to older switching devices

that mechanically could not support nonmanual operation. Most typical of these are old ring main units.

- *Automation prepared device (APD)* — This describes a primary switching device that has been designed specifically to be automated, thus it has provision for an actuator to be easily attached as part of the original design. It can be supplied without the actuator for later retrofitting. The device may also be designed to have an integral control facility (internal box or external cabinet). This control may or may not be populated with an intelligent electronic device, power supply, and provision for the communications transceiver. This control facility maybe be populated by a third party or supplied later as a retrofit.
- *Automation ready device (ARD)* — This refers to an automation prepared device that has been fully populated with all the necessary control equipment to allow it to operate in a DA scheme as specified by the customer (correct protocols for the communications media specified). It will also be protection prepared if required to operate independently within the network (i.e., recloser).
- *Automation applied device (AAD)* — This is an ARD that has the communications receiver installed and configured to work in the DA system of which it is part. Local automation logic is included where appropriate.
- *Automated distribution system (ADS)* — This describes the complete DA system, including all intelligent switching devices, communications infrastructure, gateways, integration with central control systems (SCADA), and the implementation of automation logic.

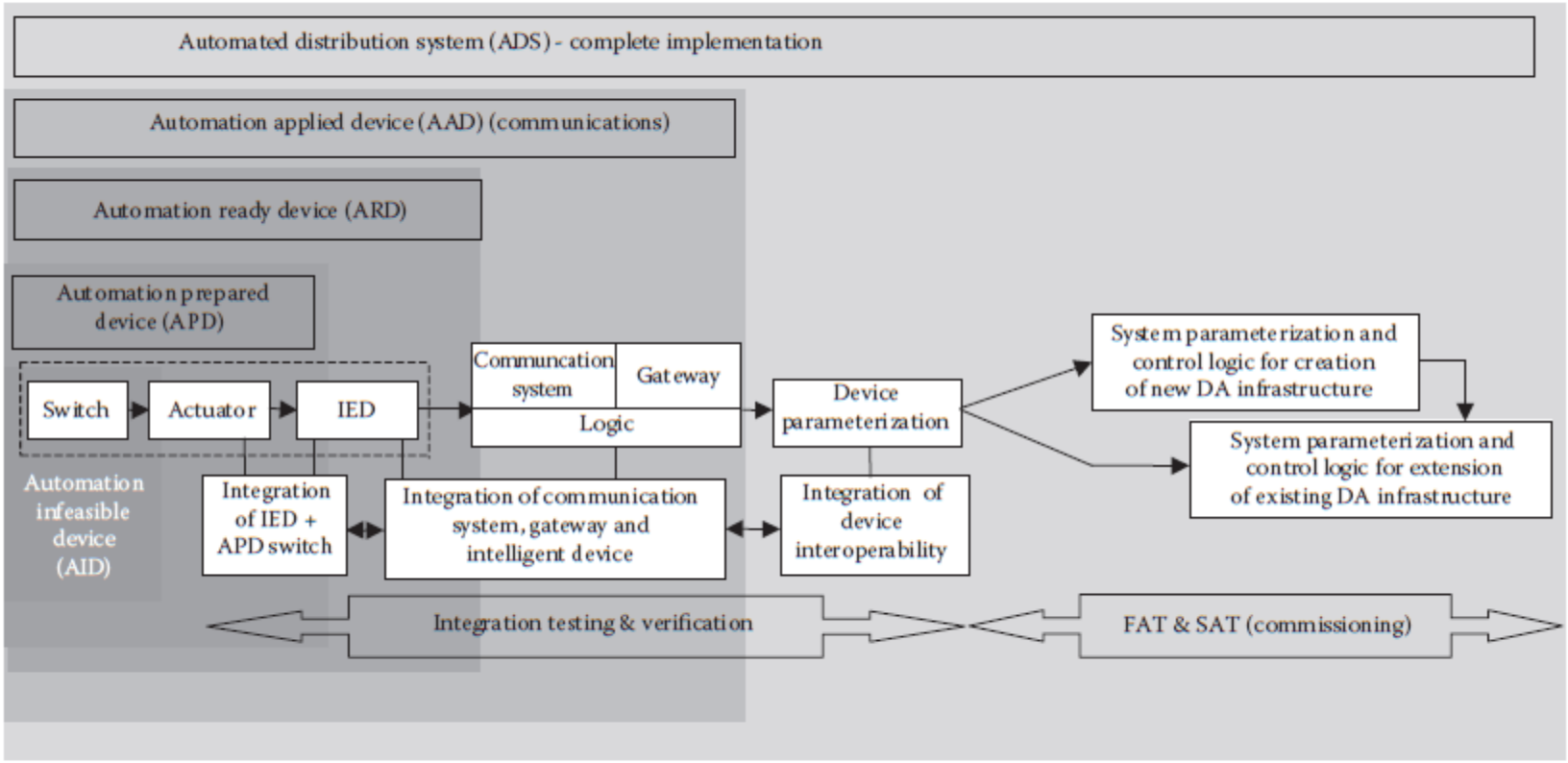

FIGURE 1.12 DA integration testing and verification requirements for different levels of automation preparedness.

2.4 EVOLUTION OF DISTRIBUTION MANAGEMENT SYSTEMS

Distribution companies had, before the advent of integrated DMSs, managed their networks through four key functions reflected by the organization of work within the company. These functions (Table 2.1) implemented independent applications to serve their own needs, thus creating the classic islands of control or work process.

Current distribution management systems are extensions of segments of these different applications specifically packaged for use in the control room and accommodating the unique characteristics of distribution networks. Although present DMSs are now converging on a common functionality, the evolution to this point has taken different paths. The starting point of the path is dependent on the dominant driver within the utility. Typical evolutionary paths seen in the industry are illustrated in Figure 2.2. The important element of the creation of the DMS structure is the ability to share data models and interface different data sources to form an integrated system that serves the needs of the operator. To

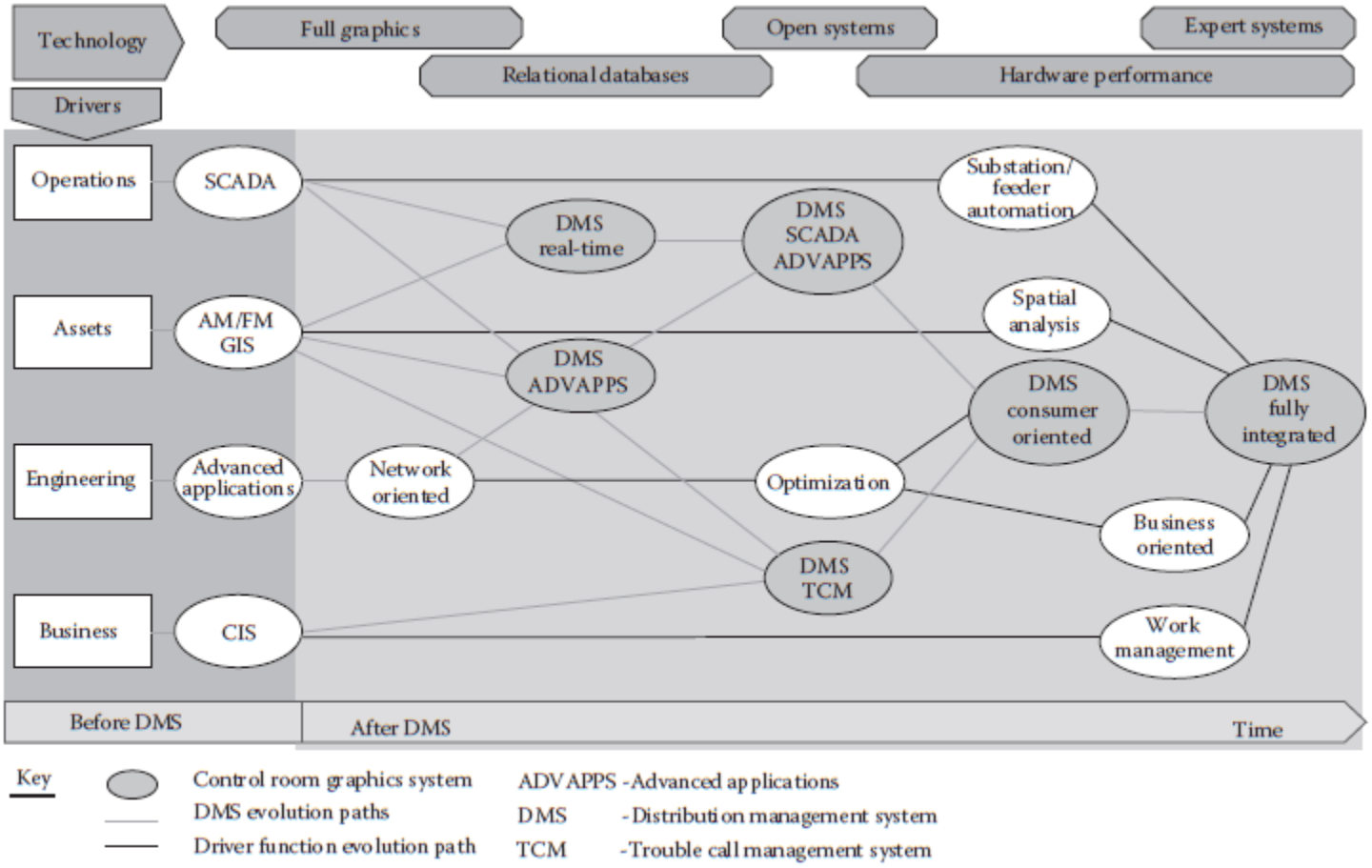

FIGURE 2.2 Typical DMS evolution paths.

achieve this, the system must be intuitive, imitating the traditional control room process with speed and simplicity of command structure.

The paths in Figure 2.2 merely demonstrate that DMS configurations and implementation strategies will vary depending on the "champion" within the organization. Trouble call management systems (TCMSs), for example, were driven by the need for the customer facing part of the utility to improve customer satisfaction. This was achieved by inferring, from a buildup of customer calls, where the fault was and then being able to respond to subsequent calls with information about the actions the utility was doing to restore power. TCMSs were not strictly real-time systems and could operate without SCADA. They were a pure IT solution to outage management (OM) and could be classified as customer-oriented DMSs. In contrast SCADA systems are real-time systems, but without the addition of a distribution graphical connectivity model of the whole network, they cannot be classified as DMSs due to the restrictive real-time cover of the network. The inclusion of a graphical model of the manually operated portion of the network allowed full operational management in terms of electrical load. This approach, lacking any customer representation, could be termed noncustomer oriented. Clearly, the bringing together of all the functions into an integrated system would achieve a system that was both customer oriented while allowing optimum utilization of the network assets. Common to all DMS configurations is the need for a detailed model of the network in terms of connectivity and operating diagrams. The latter, in the majority, take the form of geographic or geo-schematic continuous diagrams imitating existing wall maps or diagrams; however, there are still implementations that reflect existing operating practices using pages for each feeder loop and source substation. Thus, a fundamental requirement of all modern DMSs is that of a continuous world map with fast navigation and sizing. This full graphical system forms the vital part of the control room operations management (CROM) function used by operators to successfully perform their tasks. A sampling of key functions implemented (Figure 2.2) in early distribution management systems shows the importance of this function.

A full DMS is the focus of new management systems. It resides at the intersection of vertical integration (real power delivery process) and horizontal integration (corporate IT systems) of utility enterprise systems. Vertical integration is the domain of the operation's organization of the utility, and extended control of the network beyond traditional SCADA is within their responsibility. The horizontal integration element provides the source of corporate asset data (material and personnel) needed to support a full DMS implementation. A DMS requires interfaces with many different enterprise activities within the utility (Figure 2.4).

Implementation of a full DMS touches so many of the activities of the enterprise that justification can be lengthy. The more legacy systems within the enterprise to be interfaced or discarded, the more onerous the decision process. Justification is difficult, and a phased approach is usually adopted. It requires that a DMS must be modular, flexible, and open with a final solution as a seamlessly (to the user) integrated application to operate remote-controlled switching devices.

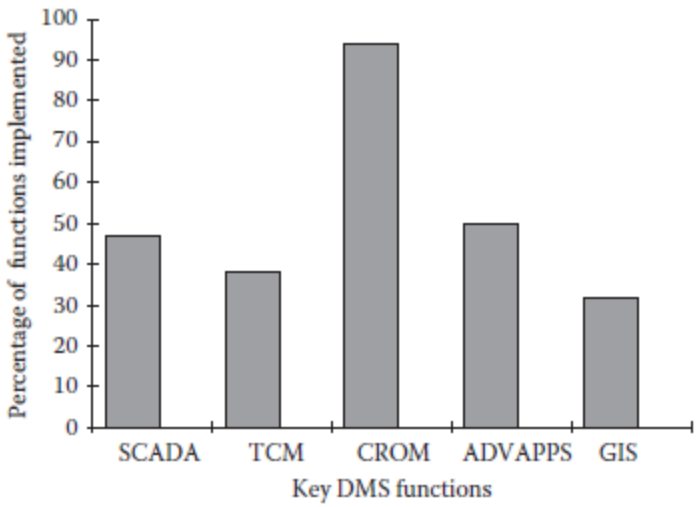

FIGURE 2.3 Implementation of key DMS functions in terms of percentage at responding utilities (SCADA — Supervisory Control and Data Acquisition; TCM — Trouble Call Management; CROM — Control Room Operations Management; ADVAP — Advanced Applications; GIS — Geographical Information System. CRM provides the operators view of the network used by TCM, ADVAP and SCADA).

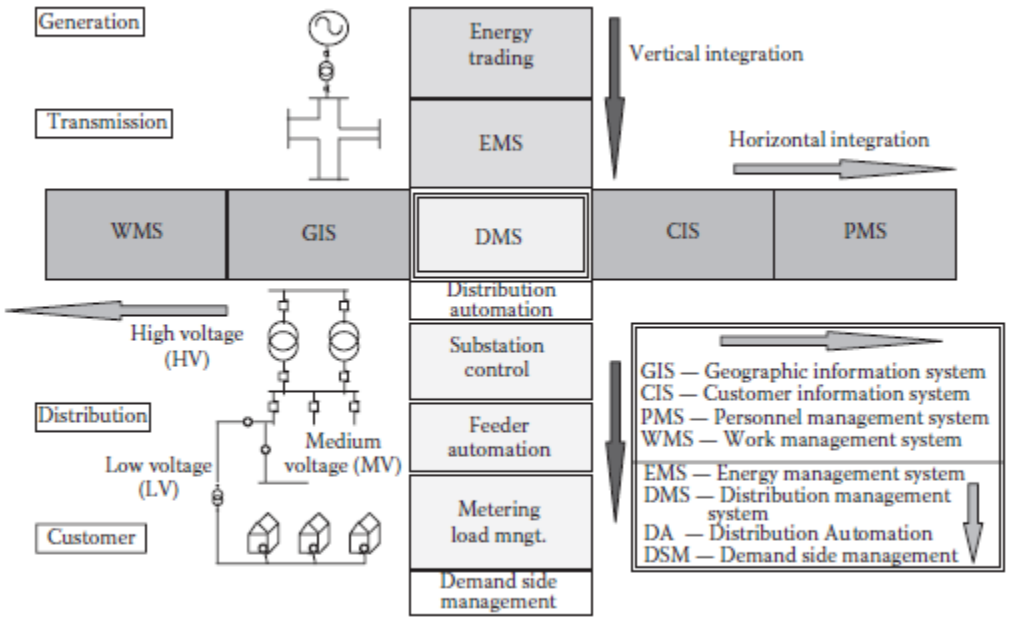

FIGURE 2.4 Horizontal and vertical integration in distribution management systems.

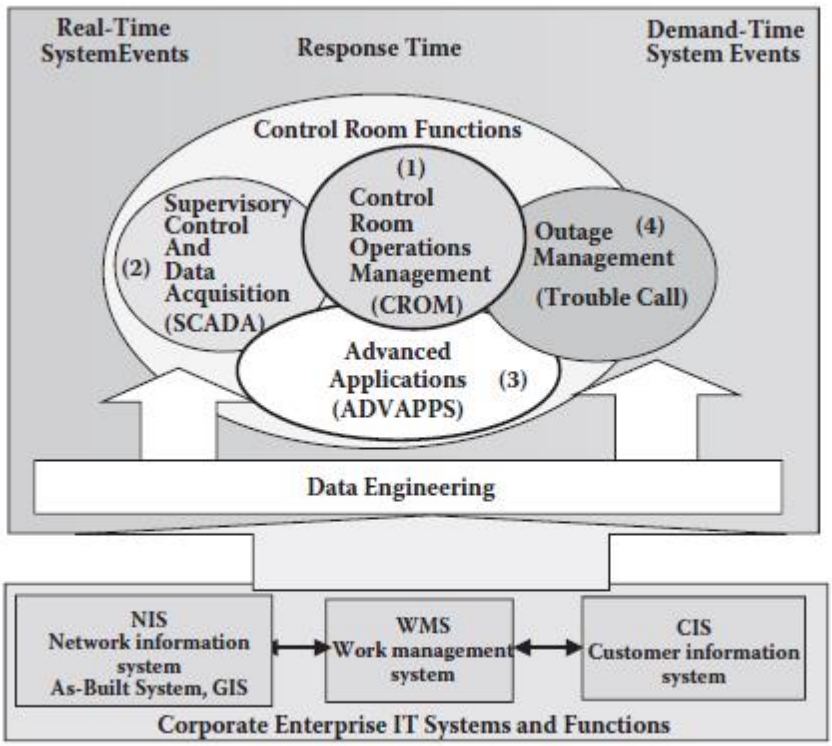

FIGURE 2.5 Key high-level distribution management system functions.

2.5 BASIC DISTRIBUTION MANAGEMENT SYSTEM FUNCTIONS

A modular DMS for network control and automation is described by four main functions, each with the ability to be fully integrated with the other yet to have the possibility to operate independently (Figure 2.5). The DMS is supported by other separate applications within the corporate information technology strategy.

(1) Control room operations management (CROM)* — CROM is the user environment vital to a DMS and is an umbrella function covering the facilities provided to the operator in the control room through the operator's console (HMI).† The following are typical CRM functions:

- Control room graphics system (CRGS) for network diagram display
- Interface to SCADA (in fully integrated systems, traditional SCADA is expanded to provide the CROM function)
- Switching job management

- Access to advanced applications (ADVAPPS) including trouble call (TCMS) or outage management
- Interface to the data engineering application for DMS data modifications and input from enterprise IT systems (EIT)

The foundation of the DMS is the MV/LV network connectivity database, which is assumed to be part of the CROM because it has very little real-time element. This is a pictorial and data representation displayed through the control room graphics system forming the human-machine interface for the system in the form of a universal operator's console. Full graphics, windowing, and multifunction platforms support access to all functions under the control of operators with different authority levels within the DMS. It has the editing capability to allow maintenance of the control room diagram and MV network connectivity database. The current "as operated" state and also the facility to effect incremental update to the normal "as built" state are prerequisites. Full tagging, topology analysis, and safety checks must be supported through dynamic coloring and tracing. Having stated that CROM includes the distribution network model, the actual connectivity model may reside in any one of the other three key functions depending on how the DMS is configured. The types of graphic displays implemented within the CROM function vary to meet individual customer's requirements. Often, the physical displays used in the control room prior to implementing a DMS are repeated. For example, utilities using vast wall diagrams representing their entire network in geo-schematic form require world maps with excellent navigation features (pan, zoom, and locate), whereas those using multiple feeder maps reproduce them as a set of pages. The trend, however, is to use a combination of representations in a continuous world map form (pure geographic, geo-schematic, orthogonal schematic operating diagrams, or a combination of any) and individual pages for substations.

(2) Supervisory control and data acquisition — This provides the monitoring and control of the distribution system in real-time. Traditional SCADA extends down to the HV/MV distribution substation (primary substation) MV feeder circuit breaker with control room displays limited to substation single schematics. Under the concept of a DMS, traditional SCADA is being extended to include representation of the entire MV network in the form of a connectivity model and control of feeder devices outside substations (FA). The foundation of a SCADA system is the data acquisition system for gathering data from remote locations and the central real-time database that is the repository of this data to be processed and displayed for the operator's use.

(3) Advanced applications — Analytical applications that rely on the MV connectivity database provide the operator with a means to evaluate in real-time and study the loading and voltage conditions (load flow) of the system in advance of a switching sequence. The consequences of any network configuration on fault levels (short circuit) can also be determined with basic applications familiar to planning engineers. The potential for applying advanced applications to other problems is considerable, such as the use of expert systems to determine preferred

restoration sequences. Fast optimization and search techniques hold the key to developing the best system reconfiguration for minimum losses and supply restoration. As privatization emphasizes the business issues, applications that concentrate on meeting the contract constraints of the network business within the engineering limits will be required. The network model is again fundamental to these applications, and if the model is not held within ADVAPPS, it relies on a synchronized copy from either the SCADA or outage management (OM) functions. These applications are considered decision support tools.

(4) Outage management — Outage management spans a number of functions and can encompass the entire process from taking a customer's call, diagnosing the fault location, assigning and dispatching the crew to confirm and repair the fault (job management), preparing and executing switching operations to restore operations, and closing the outage by completing all required reports and statistics on the incident. During this process, additional trouble calls from customers should be coordinated with the declared fault if appropriate or another incident is initiated. When the call-taking function is included, the term *trouble call management* is often used. TCM systems have been implemented as stand-alone applications without interfaces to SCADA when the CROM has been implemented in advance, because it relies on the CRGS and the MV network model database. A DMS with full TCMS implementation implies the idea of a consumer-oriented DMS. Some of the OM functions can be regarded as included in the ADVAPPS area, because it relies on fast network topology and network analysis.

The box marked "Data engineering" in Figure 2.5 represents a vital component of any DMS. This activity populates the required data into the DMS. It must have either stand-alone functionality to populate data for the real-time and advanced applications together with supporting data requirements for the graphic displays or an interface to accept as-built data from a GIS. Data from the latter source have to be augmented with additional data required by the real-time system (SCADA).

This definition of DMS functionality into minimum stand-alone modules allows assembly of different DMS configurations that have been implemented by the industry, each having varying capability, each expandable in stages to a full implementation. The key to all functions is that a connectivity model must be resident in the first module to be implemented and that the model must be capable of supporting the performance requirements of successive functions.

Typical combinations of these key functions that can be found today in the industry are shown in Figure 2.6.

As an example, utilities with recently upgraded traditional SCADA systems are implementing new control room management systems to improve the efficiency of operations of the MV network. Those under pressure to improve their image to customers are adding the trouble call management function, often as a stand-alone system loosely interfaced to existing SCADA. The combinations are many and varied, being purely dependent on the function(s) for which the utility is able to develop an acceptable business case.

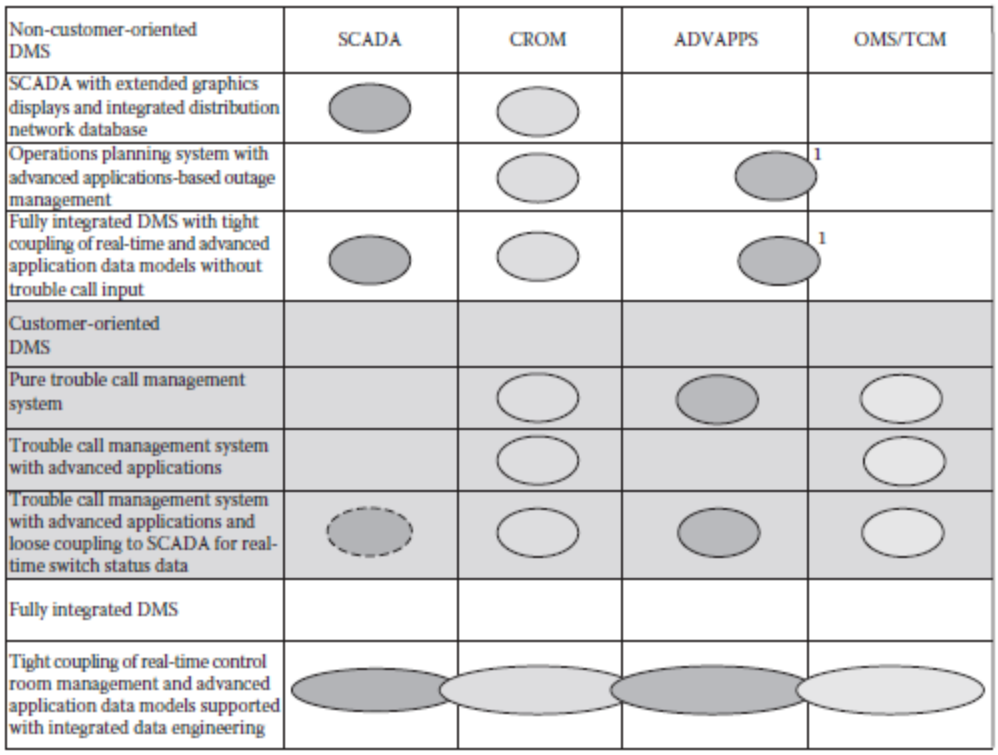

FIGURE 2.6 Typical configurations and resultant capabilities that have been used under the heading of distribution management systems (Note 1 indicates that the outage management function is performed within the advanced applications distribution network model without direct input of trouble calls).

It can be seen that the real-time requirements and those of manual operation must be carefully accommodated to allow seamless navigation between the functions by the operator. The ADVAPPS should be able to straddle both environments on demand and use both real-time and demand-time (trouble calls) data to maximize the quality of decisions.

It is evident that as the full DMS functionality is implemented, overlaps between applications within the functions will occur; thus, the architecture of the ultimate DMS must achieve a near seamless integration of the following:

- Operation of the real-time and manual controlled portions of the network considering
  - SCADA
  - Crew and job management
  - Switching scheduling and planning
  - Operating diagram maintenance and dressing (notes and tagging)
  - Economic deployment of network resources
  - Temporary and permanent changes to the network
  - Introduction of new asset and plant on the network
- Timely synchronization of as-operated and as-built network facility databases
- Data sources outside the control room such as GIS, personnel, work management, trouble call taking, and personnel (crew) management systems
- Asset management systems
- Common data engineering for all portions and components of the network within the DMS

SCADA

2.6 BASIS OF A REAL-TIME CONTROL SYSTEM (SCADA)

The basis of any real-time control is the SCADA system, which acquires data from different sources, preprocesses, it and stores it in a database accessible to different users and applications. Modern SCADA systems are configured around the following standard base functions:

- Data acquisition
- Monitoring and event processing
- Control
- Data storage archiving and analysis
- Application-specific decision support
- Reporting

2.6.1 DATA ACQUISITION

Basic information describing the operating state of the power network is passed to the SCADA system. This is collected automatically by equipment in various substations and devices, manually input by the operator to reflect the state of any manual operation of nonautomated devices by field crews, or calculated. In all cases, the information is treated in the same way. This information is categorized as

- Status indications
- Measured values
- Energy values

The status of switching devices and alarm signals are represented by status indications. These indications are contact closings connected to digital input boards of the remote communication device* and are normally either single or

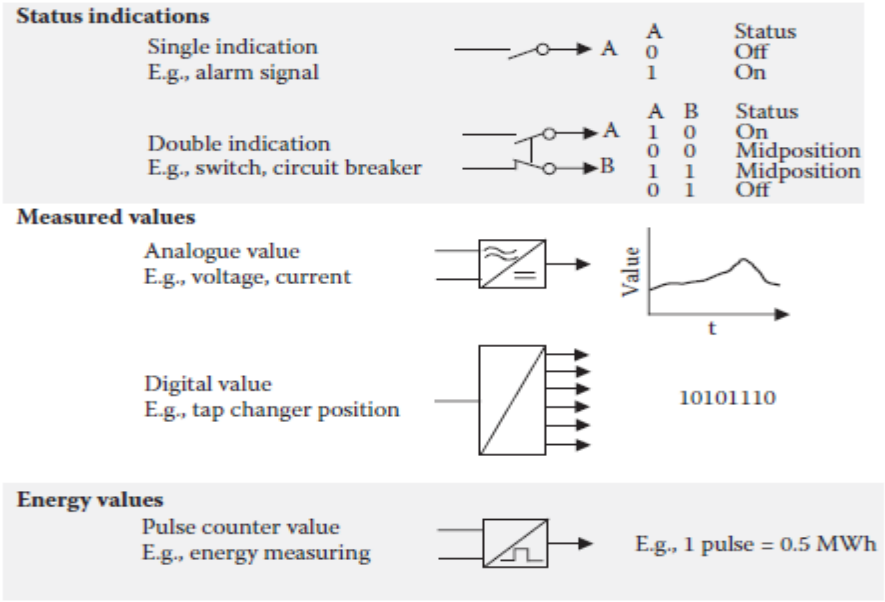

FIGURE 2.7 Examples of acquired data types. (Courtesy of ABB.)

double indications (Figure 2.7). Simple alarms are represented by single status indications, whereas all switches and two-state devices have double indication. One bit represents the close contact, and the other bit the open contact. This permits the detection of false and intermediate values (00 or 11 state), which would be reflected by a stuck or incomplete switch operation, resulting in a mal-operation alarm. Also, errors in the monitoring circuits will be detected.

Measured values reflect different time varying quantities, such as voltage, current, temperature, and tap changer positions, which are collected from the power system. They fall into two basic types, analog and digital. All analog signals are transformed via an A/D converter to binary format; because they are treated as momentary values, they have to be normalized before storing in the SCADA database. The scanning (polling) of metered values is done cyclically or by only sending changed values respecting deadbands (report by exception) and recorded on a change-of-value philosophy. Digitally coded values are typical of different settings such as tap changer positions and health checks from IEDs.*

Energy values are usually obtained from pulse counters or IEDs. RTUs associated with pulse meters are instructed to send the pulse information at predefined demand intervals or, if required, intermediate points. At the prespecified time interval, the contents of the continuous counter for the time period is passed on and the process repeated for the next interval.

2.6.2 Monitoring and Event Processing

The collection and storage of data by itself yields little information; thus, an important function established within all SCADA systems is the ability to monitor all data presented against normal values and limits. The purpose of data monitoring varies for the different types of data collected and the requirements of individual data points in the system. Particularly if it is a status indication change or limit violation, it will require an event to be processed.

Status monitoring requires that each indication be compared with the previous value stored in the database. Any change generates an event that notifies the operator. To expand the information content, status indications are assigned a normal condition, thus triggering a different alarm with an out of normal condition message. Status indication changes can be delayed to allow for the operating times of primary devices to avoid unnecessary alarm messaging.

Limit value monitoring applies to each measured value. When the status changes, an event is generated, but for this to happen, the change must exceed some limit value. Different limit values with associated deadbands (Figure 2.8) can be set above and below the normal, each limit being used to signify different levels of severity producing a corresponding alarm category. Deadbands associated with the measuring device around each limit prevent small fluctuations activating an event. Also, they reduce the transmission traffic under report-by-exception because the RTU signal is blocked unless the parameter variation is greater than the deadband from the previous measurement. Deadbands can be specified at individual collection points (RTU) for each measured value. A delay function similar to that used in status monitoring is also implemented. A good practical example for the use of limit deadbands is to avoid extensive alarming caused by waves in a hydro reservoir when the water level is on the limit value.

In order for complex power system disturbances to be correctly analyzed, a very accurate time-stamping of events is necessary. Some RTUs have the availability to time-stamp events down to millisecond level and send information with this time-stamp to the SCADA master. In this case, it is a necessity that all RTU clocks are synchronized with the SCADA master, which in turn must be synchronized with a standard time clock. This type of data forms the sequence of events (SOE) list.

Trend monitoring is another monitoring method used in SCADA systems. It is used to trigger an alarm if some quantity is changing in magnitude either too quickly or in the wrong direction for satisfactory operation of the device or network (e.g., a rise in voltage by, say, 7% in a minute may indicate an out-of-control tap changer).

The need to continually provide the operator with information among a multitude of collected data has resulted in the idea of applying quality attributes

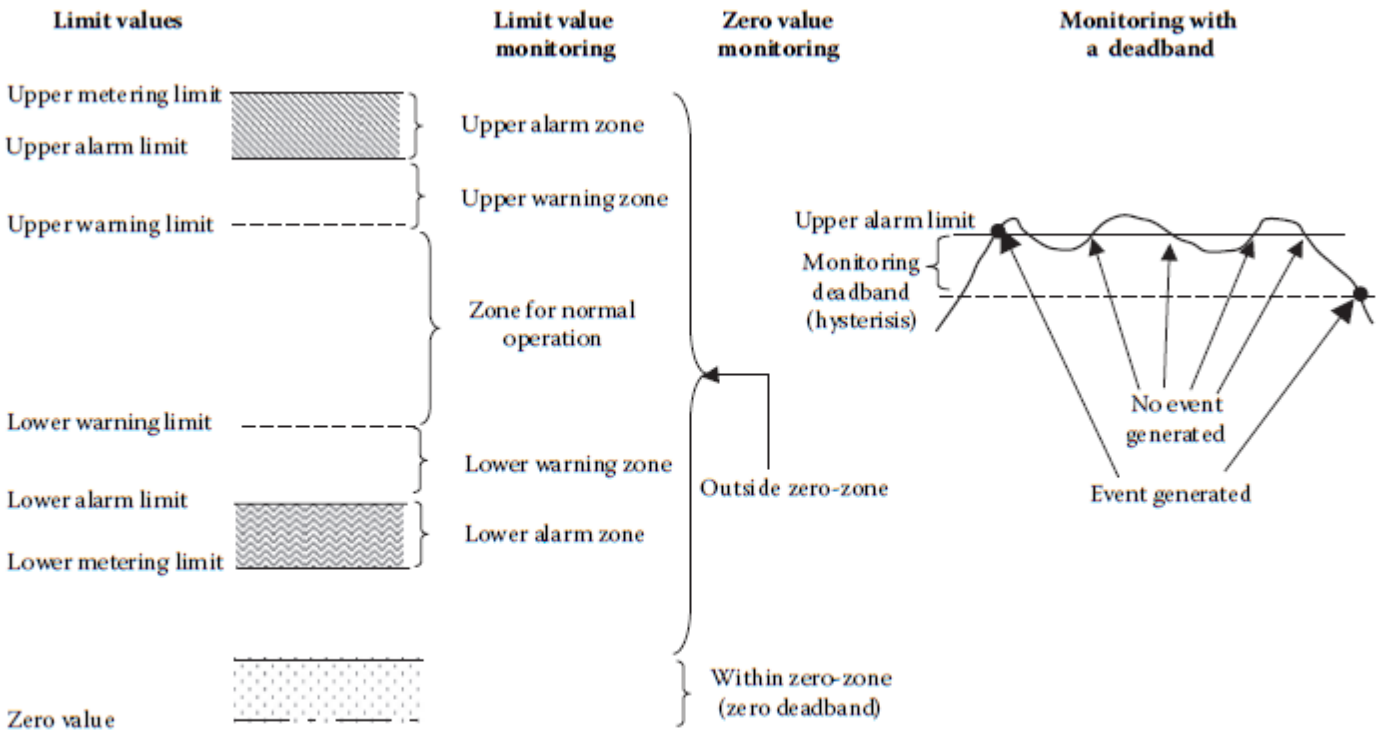

FIGURE 2.8 A typical limit diagram for a monitored quantity, like voltage, that should remain within certain bounds above zero, and the concept of deadband to limit event generation from small fluctuations of the quantity. (Courtesy of ABB.)

to data, which in turn invokes a method of flagging the data either in a particular color or symbol in the operator's display console. The following are typical attributes:

- Nonupdated/updated — data acquisition/manual/calculated
- Manual
- Calculated
- Blocked for updating
- Blocked for event processing
- Blocked for remote control
- Normal/non-normal state
- Out-of-limit, reasonable/alarm/warning/zero
- Alarm state
- Unacknowledged

Event processing is required for all events generated by the monitoring function or caused by operator actions. This processing classifies and groups events so that the appropriate information can be sent to the various HMI functions to represent the criticality of the alarm to the operator. Event processing is a crucial function within the control system and significantly influences the real-time performance, particularly during alarm bursts. The result of event processing is event and alarm lists in chronological order. In order to assist the operator, events are classified into a number of categories, the most significant being alarms, which generate an alarm list. The following categories are the most usual:

- Unacknowledged and persistent alarm categories determine a particular alert on the display such as flashing of the color presentation, and in some cases an audible signal is generated. The unacknowledged alarm remains until operator acknowledgment is made. The persistent alarm category remains until the state disappears (usually through operator action) or is inhibited.
- An event associated with a particular device type in which an attribute is assigned for each data point such as a bus voltage or relay protection operation.
- Reason for the event occurring by assignment to the monitoring function (e.g., spontaneous tripping of a circuit breaker or recloser, a manual or control command).
- A priority assigned for ranking all events into different priority groups often determined by combining the device type and the reason for the event.

The whole purpose of these classifications is to filter important events from less-important events, so in times of multiple activities, the operator is assisted in resolving the most important issues first.

2.6.3 Control Functions

Control functions are initiated by the operators or automatically from software applications and directly affect power system operation. They can be grouped into four subclasses.

Individual device control, which represents the direct open/close command to an individual device.

Control messages to regulating equipment that requires the operation, once initiated by the control room, to automatically be conducted by local logic at the device to ensure operation remains within predetermined limits. Raising or lowering tap changer taps is a typical example or sending of new set points to power generators.

Sequential control covers the automatic completion of a linked set of control actions once the sequence start command has been initiated. A set of sequential switching steps to restore power through a predefined backup configuration typifies sequential control.

Automatic control is triggered by an event or specific time that invokes the control action. Automatic control of voltage through on load tap changing responding automatically to the voltage set point violation is a common example. Time switched capacitor banks are another.

The first three control categories above are initiated manually except when sequential control is initiated automatically. Manually initiated control actions can be either always on a select-confirm-before-operate basis or immediate command.

2.6.4 Data Storage, Archiving, and Analysis

As stated earlier, data collected from the process are stored in the real-time database within the SCADA application server to create an up-to-date image of the supervised process. The data from RTUs are stored at the time received, and any data update overwrites old values with new ones.

Performance statistics captured by SCADA systems are extremely important in supplying customers and the regulator with actual figures on power quality of segments of the network as well as the network as a whole. The stored sequence of events (SOE) list provides the basis for developing these statistics.

This time tagged data (TTD) is stored in the historical database at cyclic intervals, e.g., scan rates, every 10 seconds or every hour. Normally, only changed data are stored to save disk space. Data can be extracted at a later date for many forms of analysis such as planning, numerical calculations, system loading and performance audits and report production.

Post-mortem review (PMR) is another important area and is usually performed soon after an interruption or at a later date using the historical database. To facilitate PMR, the data are collected by making cyclic recording of either selected sets of values within the PMR group or by recording all data. This segregation of data allows each PMR group to be assigned the appropriate collection cycle time and

associate it with the interruption cause event, making it possible to "freeze" the associated data before and after the interruption event for later analysis.

This requirement for data mining is driving more sophisticated data archiving functions with adaptable ways to select data and events to be stored. These historians, utility data warehouses, or information storage and retrieval (ISR) systems with full redundancy and flexible retrieval facilities are now an integral part of any DMS. They are normally based on commercial relational databases like Oracle.

2.6.5 Hardware System Configurations

SCADA systems are implemented on hardware comprised of a multichanneled communications front end that manages the data acquisition process from the RTUs. This traditionally has been achieved by repeated polling of RTUs at short intervals (typically, every 2 seconds). The data received are then passed to the SCADA server, over a local area network,* for storage and access by operators and other applications. Control is invoked through operator consoles supporting the HMI command structure and graphic displays. The mission criticality of SCADA systems demands that redundancy is incorporated, thus hot standby front ends and application servers based on dual LAN configurations are standard. The general configuration of a typical SCADA system is shown in Figure 2.9.

The front ends support efficient communications arrangements over a wide area network† to the RTUs, for the collection of process data and the transmission of control commands that can be optimized for both security and cost. Communication front ends support a variety of configurations. The most popular in use today are as follows:

- Multidrop is a radial configuration where RTUs are polled in sequence over one communications channel. This results in a cheaper solution at the expense of response time.
- Point-to-point dedicates one communication channel to one RTU. It is commonly used for either major substations or data concentrators having RTUs with large I/O requirements. This configuration gives high response levels with the added expense of many communication channels. In applications requiring very high reliability, an additional communication path is added to form a redundant line point-to-point scheme.
- Loop operates in an open loop configuration supplied from two communication front ends, each channel being of the multidrop type. The advantage is one of reliability, because the loss of any communication

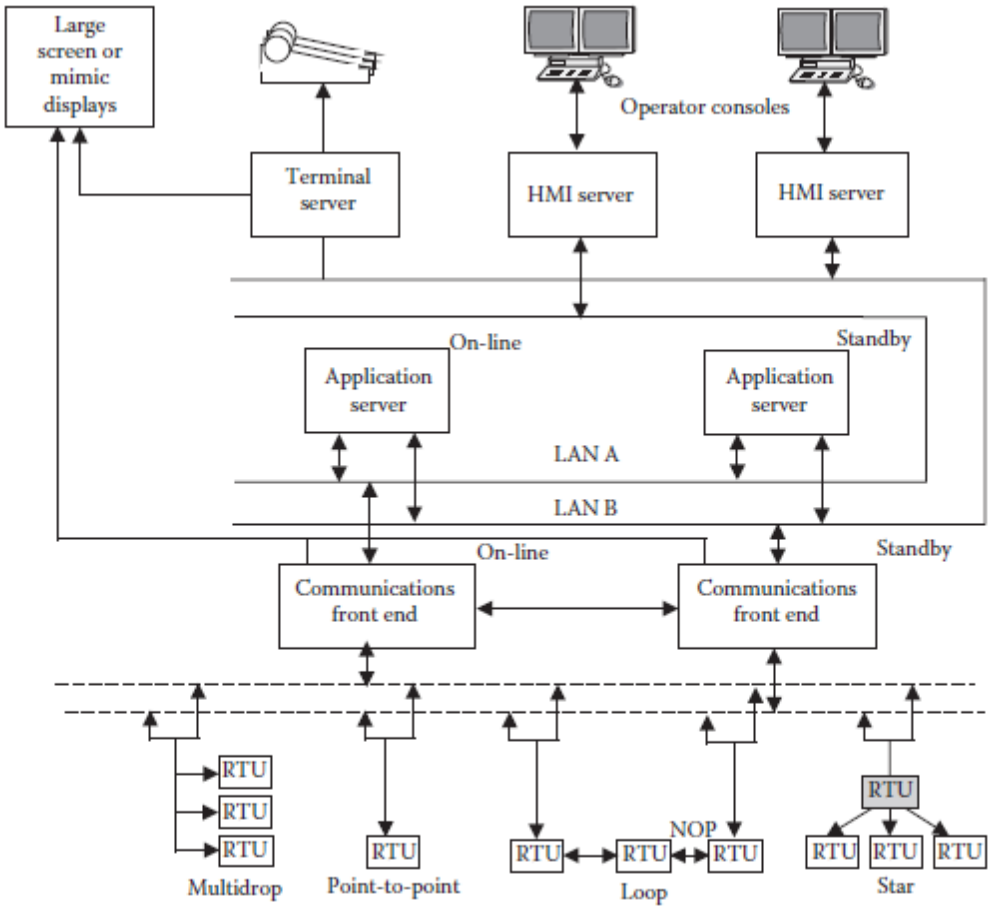

FIGURE 2.9 Configuration of a typical SCADA system. (Courtesy of ABB.)

segment path can be overcome by switching the normally open point (NOP).

- Star configuration is a combination of point-to-point to data concentrator RTU, which controls data access to slave RTUs configured as point-to-point or multidrop. Such configurations are used in distribution automation where a mixed response time can be economically engineered.

The central system comprising of everything above the communications front end is called the "master station." In the industry, there exist many communications protocols and their variants in use between the master station and the RTUs. Most protocols* are based on centralized polling of the RTUs.

SCADA in BRIEF:

The application areas of SCADA can essentially be categorized into the following groups:

- Small SCADA systems with a selected number of functions, e.g. for distribution networks and for electrical networks of industrial complexes.
- Medium-size SCADA and EMS with the full spectrum of functions for distribution and subtransmission networks, and selected functions for generation.
- Large-scale SCADA and EMS with an extensive and sophisticated range of functions for transmission networks and generation.

The various components of SCADA are shown in Fig. 5.12.

When interfacing and RTU to existing equipment, the following aspects may be considered.

- Availability of potential free contacts and motor drives or actuators.
- Wiring and marshalling.
- Interposing relays may eventually be required.
- Measurement transducers.
- Buffered power supply.

When building a new sub-station, the integration of the RTU functions into a microprocessor based station control system is desirable, since multiple cabling between the signal sources and the different systems for protection, local control and remote control can be avoided.

Hardware and Software

A typical SCADA system comprises the hardware and the software.

Hardware

The hardware may consist of:

- User-friendly man-machine interface
- Work-station
- Servers having a particular function
- Communication sub-system
- Peripherals
- RTUs.

All the above components communicate with each other via a Local Area Network (LAN) with internationally standardised protocols.

A flexible redundancy is provided, assigning hot stand-by servers to any server fulfilling time critical functions.

Software

A thorough understanding of available packages, operating systems, database access standards, user interface standards and systems integration techniques is essential to provide solutions to meet specific requirements. Also vital are high calibre staff and established policies, procedures and techniques for software engineering, project management and quality assurance.

Generally, experienced inhouse groups or external services are capable of maintaining and enhancing application programmes for distribution automation such as for SCADA, AM/FM/GIS, CIS etc. Procurement of new programmes and major upgrades are often assisted by specialized consultants. There are national and international suppliers' markets for a broad range of softwares. An international standard, SPICE, enables the purchaser to assess the relative capabilities of software suppliers and the risk involved in selecting them. Artificial Intelligence (AI) methodology is different from usual programming and normally, special skills are needed for applying AI tools or shells and setting-up and maintaining the knowledge base. This situation will be improved once the application of AI techniques becomes common and the skills of the maintenace teams are developed.

2.6.6 SCADA System Principles

It must be understood that performance has been at the heart of all SCADA systems due to the historical limitation of communication speeds. The slow speed affects the data acquisition function, which has formed the foundation of system architecture of all traditional SCADA systems for distributed processes. Because of this traditionally very limited bandwidth of data transmission, the whole design of two asynchronous and independent cycles of data processing in SCADA has been formed. It would be impossible for the SCADA applications to receive the information from metered values and indications with reasonable response times directly in the substation when only 50 baud (bits per second) was available for communication. Therefore, the data acquisition cycle collects data as fast as the communication allows and mirrors the state of the process into a real-time database. Presentation of process state to the operators is made from this database as described in an earlier section. All applications work on this mirrored image of the process, thus being totally independent of the data acquisition function.

A particularity of the slow baud rates and high security demands is that RTU protocols were designed with very special features. At very low speed, every single bit counts, and therefore bit-synchronous protocols were the norm in the beginning of remote control. Some of these old protocols still survive and have to be interfaced in new systems today. The disadvantage of bit-synchronous protocols is that they require special hardware and special interpretation routines. In modern systems and in new protocol standards, byte-oriented protocols are used. These protocols have more overhead (more frame bits per "true" information bits), but they can be handled with normal (and much cheaper) line cards and modems.

The same basic design that formed SCADA from the beginning holds true today, even if much higher bandwidths based on modern PLC and fiber-optic cables are available. The only difference today is that the mirrored image of the process is much "closer" (in time) to the real process. It is now unusual to find point-to-point communication to the substations with lower than 2400 baud, and an increasing use of wide area network communication with much higher communication speeds has taken place.

In contrast, an industrial control system has the completely opposite design compared to that for network control, because of the limited geographical distribution of industrial processes. In this case, it is usually no problem to obtain high-bandwidth communication all the way down to the controllers and measurement points in the process. The central database is only a complication for the presentation functions and the higher-level applications because they access the process data directly from the measurement points — from the process itself.

Based on the above discussion and for historical reasons, it is easy to understand that specifications have concentrated on the calculation of data acquisition response times and bandwidth requirements. Such assessment will demonstrate how accurately the system is able to mirror the process and how precise the result of the higher-level applications will be, taking into account the configuration of

the data acquisition* system. The data acquisition can be configured in a number of ways, which will be described in the following sections.

2.6.7 Polling Principles

Two main types of polling of RTUs are found in network control systems: cyclic and report-by-exception.

Cyclic. The measurands and indications are allocated to different polling cycles (scan rate), typically on a number of seconds level, e.g., every 2–4 seconds for high-priority data and each 10 seconds for less-important points. The front end will request information from the RTUs in these cycles, and the RTUs will answer with all data allocated to this level. The central SCADA system will check if the data are changed from the last cycle and, if so, update the real-time database and start other dependent applications. The communication channel is idle between polling cycles.

Commands and set points are sent from the SCADA servers when requested by the operators. If command requests are given high priority; they will interrupt any sending of telemetered data from the RTUs, otherwise, the sending of commands will have to wait until the line is free.

Cyclic polling will, of course, give very consistent response times that are independent of how much the process really changes; i.e., the data acquisition response times are always, even during big disturbances, the same as under normal conditions. The SCADA servers will be more heavily loaded during disturbances because change detection and all event activation takes place in SCADA for cyclic polling schemes.

Report-by-Exception (RBE). In the report-by-exception principle, the RTU only sends information when a telemetered value has changed (for measurands over a deadband). The front end polls the RTUs continuously, and the RTU will answer either with an empty acknowledgment when no data are available or with data if a data point has changed. Because not all data points are sent, in each telegram, data points under report-by-exception schemes require identifiers.

In report-by-exception schemes, the line is immediately polled again after the RTU has answered. This means that the communication line is always 100% loaded. With higher communication speeds, the lines are still 100% loaded, but the response times are improved.

Commands and set points will be sent on request from the SCADA system as soon as a new poll is initiated; i.e., the command replaces the next poll. This means that commands and set points are sent more consistently in a report-by-exception system because the waiting time for ongoing inward information is shorter.

Priority schemes can also be applied by report-by-exception. Objects can be allocated different priorities depending on their importance. Normally, indications and very important telemetered values, e.g., frequency measurements for automatic generation control (AGC) and protection operation, are allocated to priority

1, normal telemetered values like active and reactive power flows to priority 2, and sequence of events data to priority 3. The polling scheme is designed to first request highest priority information on all RTUs before priority 2 is requested and so on. This is important in multidrop configurations in order to achieve good response times for important information, e.g., status for breakers, from all RTUs on the same line.

Report-by-exception polling gives much faster response times for telemetered information in almost all circumstances. During high-disturbance situations, the report-by-exception will be marginally slower than cyclic polling because more overhead in the telegrams is required to identify the data.

Unbalanced polling is when the polling request, i.e., the initiative for communication, always comes from the Front-End computers — the master. With balanced protocol, the RTU can send a request to the front end to poll when something has changed in the RTU. Balanced protocols are typically used in networks with low change rates, many small RTUs, and low requirement on response times, e.g., in distribution medium-voltage networks, for Feeder Automation, and with dial-up connections.

Some protocols allow the downloading of settings to RTUs, thus avoiding the need to visit the site to conduct such modifications. Downline loading is normally handled in the file transfer part of the protocol. The format of the downloaded file is vendor specific and no standardization is proposed for these parts.

Use of Wide Area Networks for Data Acquisition. There is now a clear trend in SCADA implementations for the use of wide area network (WAN) and TCP/IP communication for data acquisition from RTUs. The communication principle applied on the WAN is packet switched communication. Standard RTU protocols based on TCP/IP have been defined, e.g., IEC 60870-5-104 for these types of networks. The reason for this trend is that the customers are installing much more communication capacity all the way to the substations, e.g., by installing fiber optics in the power line towers and direct laid with new cable networks. Packet-switched technologies use this additional communication capacity more efficiently, and the spare capacity can be used for many other purposes by the utilities, e.g., selling telecommunication services.

In a packet-switched network, the communication routes are not fixed. The individual packets of data search for the best possible communication path. This means that different packages can take different routes even if they belong to the same logical telegram, and the complete information is only assembled at the receiving end of the communication. Precise response times in such networks are not possible to define. However, with stable communication and enough spare capacity on the WAN, the response times will be sufficient for all practical purposes.

One result of packet-switched communication is that time synchronization of RTUs over the communication lines will not be accurate because of the unpredictability of transmission times. Time synchronization of RTUs in these types of networks is normally done locally, usually with GPS.

Sending of set points for closed loop control applications might also be a problem in packet-switched networks. The closed loop regulation characteristics

will be influenced when the delay times vary. In these applications, special consideration has to be taken to keep data sending and receiving times constant, e.g., by defining a certain number of predefined and fixed spare routes in the network that the communication can be switched between if communication problems occur on the normal route, e.g., through the breakdown of a communication node.

WAN communication does not require front ends and uses a standard commercial router directly connected to the (redundant) LAN of the control center. The router will put the data together based on the received packages and send the RTU telegrams to the SCADA servers. The same principles for polling apply to WAN as for point-to-point connections.

2.7 OUTAGE MANAGEMENT

Outage management is one of the most crucial processes in the operation of the distribution network, having the goal to return the network from the emergency state back to normal. This process involves three discrete phases:

1. Outage alert
2. Fault location
3. Fault isolation and supply restoration

Various methods have been developed to assist the operator and depend on the type of data available to drive this process (Figure 2.10).

Utilities with very limited penetration of real-time control (low AIL) but good customer and network records use a trouble call approach, whereas those with good real-time systems and extended control are able to use direct measurements from automated devices. The former solution is prevalent in the United States for primary networks (medium voltage) where distribution primary substations are smaller. Except for large downtown networks, the low-voltage (secondary) feeder system is limited with, on the average, between 6 and 10 customers being supplied from one distribution transformer. This system structure makes it easier to establish the customer-network link, a necessity for trouble call management systems if outage management is to yield any realistic results. In contrast, European systems with very extensive secondary systems (up to 400 consumers per distribution transformer) concentrate on implementing SCADA control; thus, any MV fault would be cleared and knowledge of the affected feeder known before any customer calls could be correlated. In this environment, to be truly effective, a trouble call approach would have to operate from the LV system, where establishing the customer network link is more challenging. In these cases, trouble call response was aimed at maintaining customer relations as a priority over fault location, which is achieved faster through a combination of system monitoring applications (SCADA, FA, and FPIs*) and advanced applications.

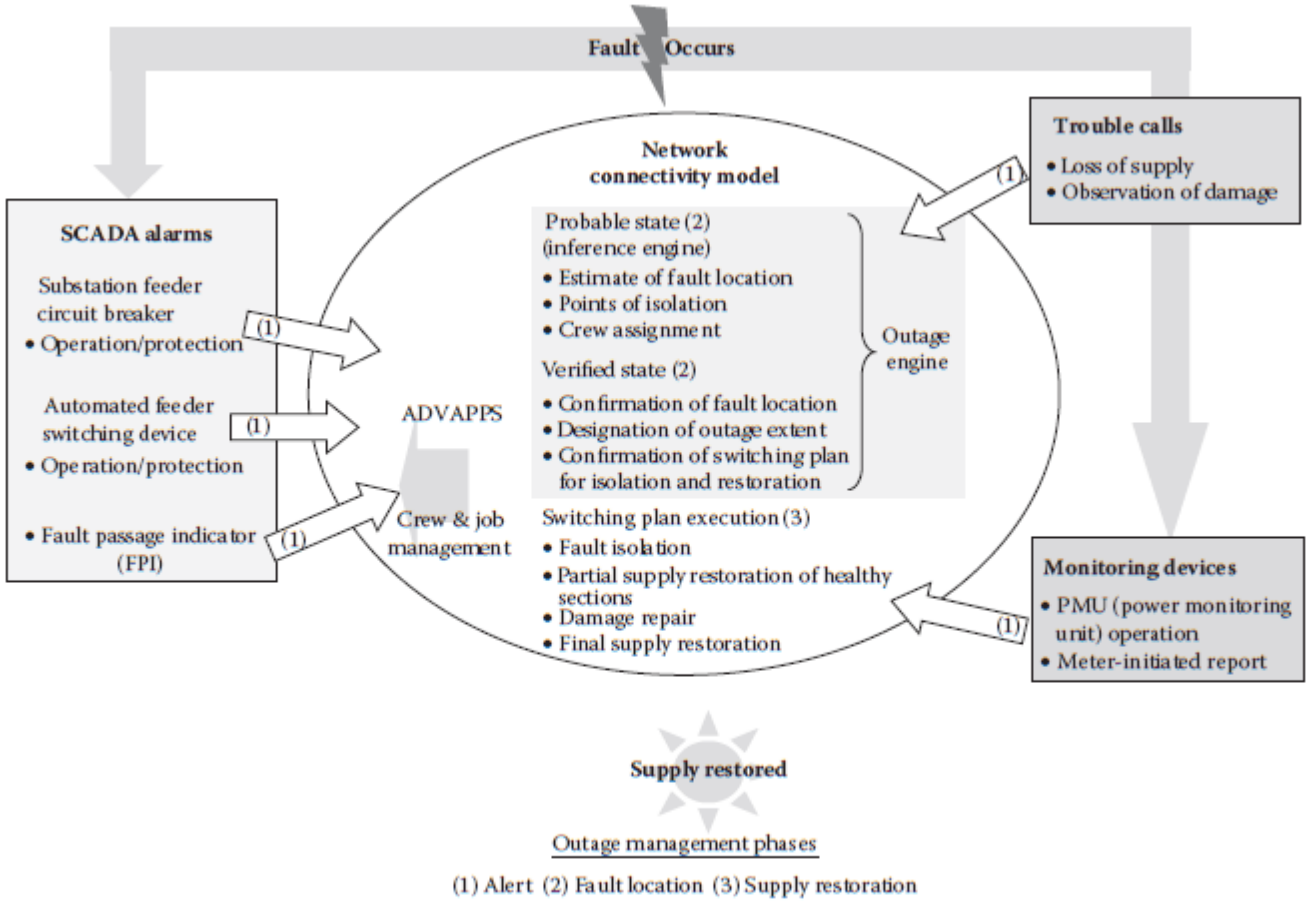

FIGURE 2.10 Outage management flowchart.

DMSs are now combining the best of these approaches to achieve real-time solutions on the network with customer-oriented feedback. It is, though, worthwhile to describe the principles of the various methods to understand how their combination can improve the overall solution. The fault location and restoration function of outage management can be both a local solution (reclosers and auto sectionalizers) or a centrally based process. The latter will be described here, with the local approach being covered in later chapters on feeder automation.

2.7.1 Trouble Call-Based Outage Management

Trouble call-based outage management was the first approach for including customer information in network operations. Through an IT approach, it improved operations where SCADA was limited to large substations and was effectively non-existent in the distribution network. Limited SCADA provided the operator with little information of the actual network failure, unless seen by the substation protection, until a customer called the customer information department complaining of loss of supply. Loss of supply, whether as a result of a known SCADA operation or the operation of a self-protected non-remotely controlled device such as a fuse or recloser, frequently resulted in a cascade of calls, all of which had to be managed for high customer satisfaction. Trouble call management systems are designed by extracting maximum information from the call itself, to determine the fault location; to providing the caller with up to date information on the outage; to monitoring the progress of the restoration process and finally to maintain statistics per customer of quality of supply ensuring correct assessment of penalties. The whole process is shown in Figure 2.11.

Trouble call systems must be designed to have fast response during storms when call bursts result as the first storm effects are felt by customers. As the number of circuits affected rises, the tendency is for the calls to peak and then fall off, even though the number of affected circuits has not peaked, because customers start to realize that the storm has had its maximum effect and will pass. However, sustained outage duration will result in delayed bursts as customers start to lose patience. The call history versus affected circuits profile of a typical storm is shown in Figure 2.12.

Fault Alert. The first trouble call signifies that there is potentially a network failure; however, in some cases it may be an isolated fault within the customer's premises. This is quickly confirmed once additional calls are received. A call entry screen of a typical TCM, in Figure 2.13 shows the data captured and the customer relation activities, such as a callback request that are now being accommodated in modern systems.

Fault Location. The determination of fault location proceeds through two steps, inference and verification, to reflect the two possible states of an outage. The core of the process is often called the outage engine. It automatically maintains the status of different outages and the customers (loads) associated with each outage state by processing line device status and trouble groups. The method relies on a radial connectivity model of the network, which includes a

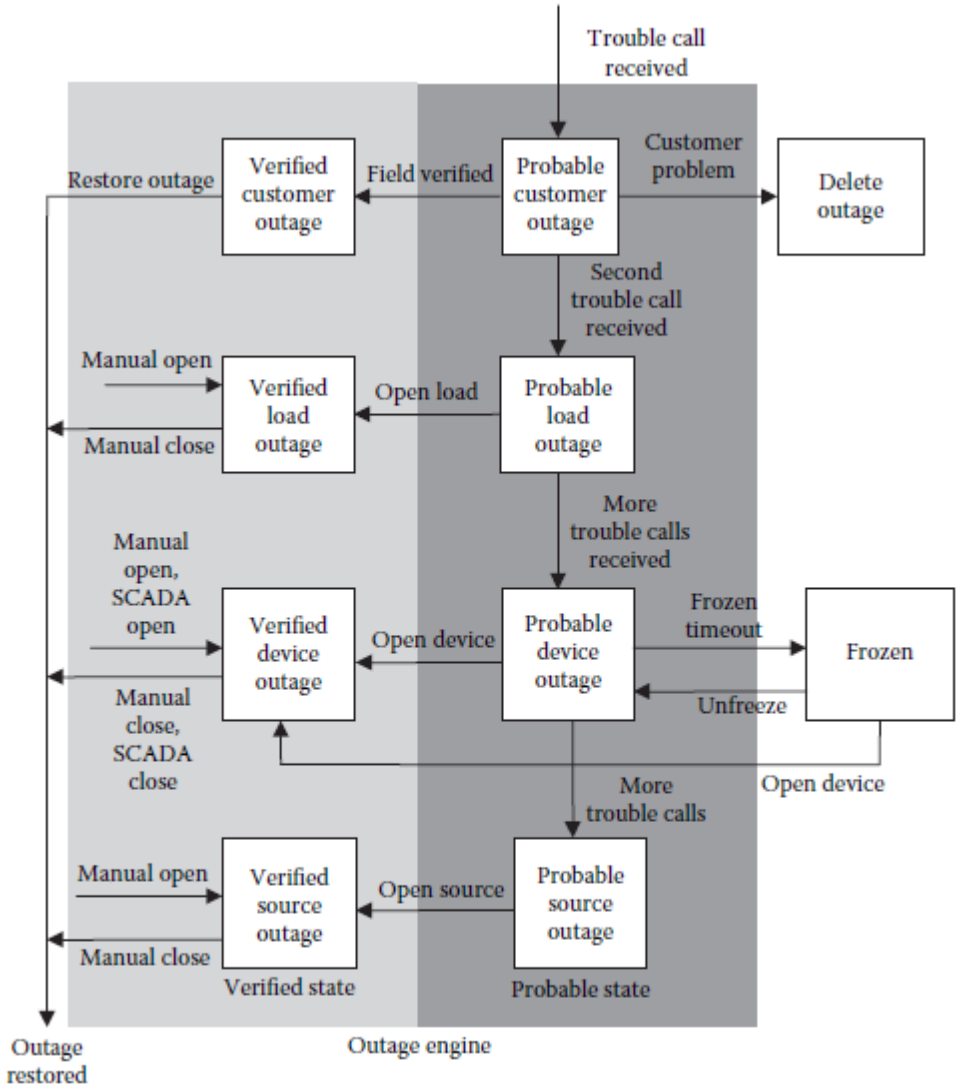

FIGURE 2.11 Trouble call management sequence of events from first call entry to restoration. (Courtesy of ABB.)

customer-network link pointing every customer in the CIS to a location on the network. As mentioned previously, in U.S.-type distribution systems, associating customers with a distribution transformer is less complex than in European systems, where the secondary (LV) networks are more complex and the number of customers per transformer greater. Various hybrid assignment methods (such as postal code) in addition to GIS* methods have been used to check early mains records. An outage is defined as the location of an operated protection device or

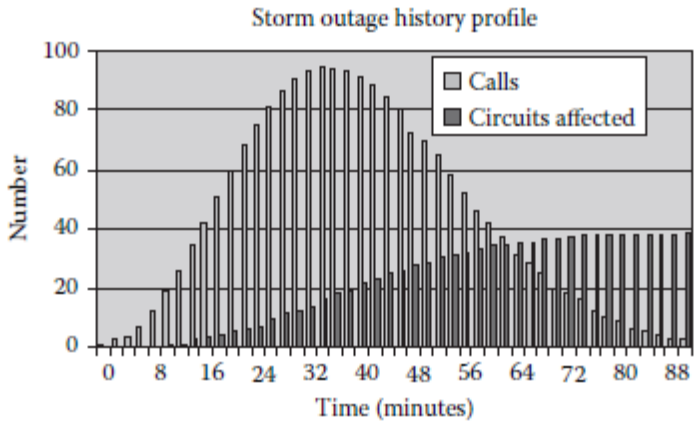

FIGURE 2.12 Duration profiles of the number of outage trouble calls and affected circuits for a typical storm.

open conductor and the extent of the network de-energized as a result of the operation including the affected consumers.

Probable Outages. Most outage engines analyze trouble calls that are not associated with a known or verified outage, and group them into probable outages. During each pass, all new trouble calls and all trouble calls previously grouped into probable outages (which are not yet assigned to verified outages) are noted. This new set of trouble calls is used to trace the network to infer a new set of probable locations of outages. New probable outages are identified, previously probable outages moved, and previously probable outages deleted, so that there is a probable outage at each location in the new set of probable locations. A location is a protective device that could have operated.

Typical algorithms predicting outages use a "depth first" algorithm with post-order traversal of the feeder network graph. Empirical rules are developed to cater for branching of the radial network, and the branch may include protective devices. For example at each node of the network, the ratio of trouble calls to the number of customers is calculated then compared to the accumulated ratio for all nodes in the subgraph below that node. Lists of trouble calls and probable outages below the outage at this location are calculated. After visiting a node, a decision is made whether or not to create a probable outage at the node or to defer the decision until concluding examination of an upstream node. The following rules are typical for deterministic inference:

- Each trouble call must be assigned to some probable outage.
- Before an outage is created, at least two loads must have trouble reports (customer calls).
- An outage should be placed at the lowest protection device or load in the network, above the point where the ratio of reports to customers is below a defined threshold.
- Determination of logical "AND" together or "OR" together results of affected load counts and percent of customer calls.

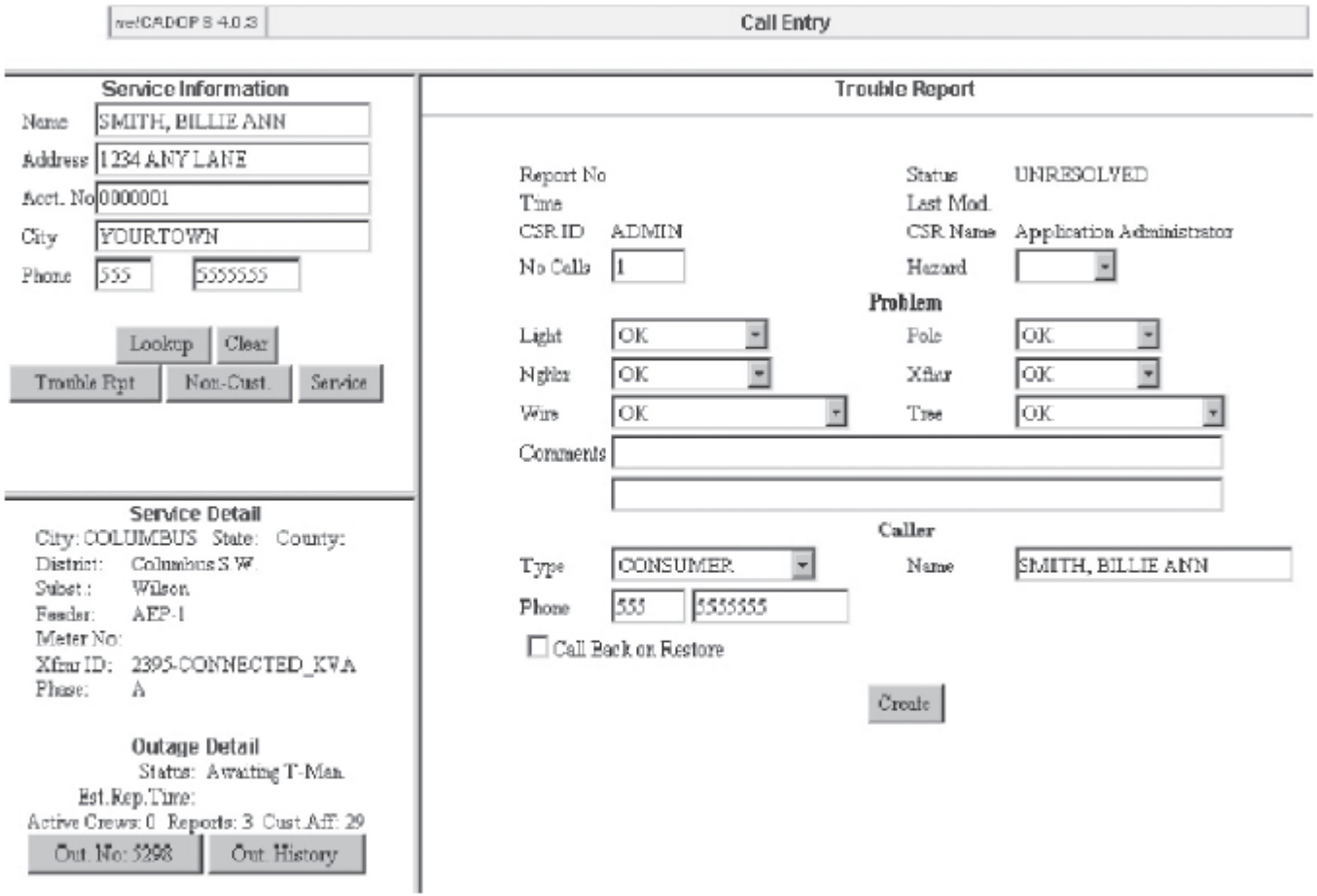

FIGURE 2.13 Typical call entry screen of a modern trouble call management system. (Courtesy of ABB.)

The trouble call approach is used predominantly in networks where SCADA deployment is very limited, with the consequence that the system is not observed. Methods using fuzzy logic are now being investigated to extend outage determination accuracy. Traditional methods predominately rely on calls and network topology to find a common upstream device. The proposed fuzzy logic method extends the input information to include protection selectivity. A fuzzy logic-based decision process screens this information [6]. The process combines fuzzy sets that reflect equivalent logical operations. For example, a feeder with two branches will have a fuzzy set "A" for branch "a" reflecting the devices that could operate for a call at the end of the branch.

$$A_a = \{(x_{ia}, \mu_{ia}(x_{ia}))/x_{ia}\},$$

where upstream devices $\alpha = x_{ia}$ with set membership values $\mu_{ia}(x_{ia}) = i_a/i_a$.

A second set is formulated reflecting branch "b" and each set if combined using the Hamacher principal to account for the common devices in each set upstream of the branch point to form one fuzzy logic-based decision algorithm for the feeder. Comparison of the fuzzy logic-based extension to the traditional approach outage detection (OD) using Monte Carlo simulation suggests dramatic improvements on the prediction of outage location for multiple faults.

	Fuzzy OD (% Accuracy)	Traditional OD (% Accuracy)
Case A (single fault)	98.6	99.1
Case B (multiple fault)	83.7	3.7
Case C (multiple fault)	80.4	2.8

Fast and accurate prediction of the location of a probable outage is vital because it is used to direct the field crews to confirm the fault location and points of isolation. The faster the crew reaches and confirms the extent of the damage, the more efficient the restoration process.

Verified Outages. An outage is verified by confirmation by the field crew of the operation of a manually controlled switch or open circuit or the notification of a SCADA operation. Once the outage is verified, the outage engine repeatedly analyzes switching events and other connectivity changes (phased restoration) to update customers associated with the outage. Different events in this category are typically processed as follows:

- For "open" operations at a probable outage, the outage is verified.
- For "open" operations where there is no probable outage, a new verified outage is created.
- For "open" operations to a de-energized device, no outages are created or modified.
- For "close" operations at a verified outage, the outage is removed.

- For "close" operations that energize de-energized loads, the outage is partially or totally removed.
- For "close" operations of a de-energized device, no outages are modified.

A "close" operation from SCADA is only accepted after a certain time delay to allow for closing onto a fault resulting in a new trip.

Supply Restoration. Emergency switching plans and field crew actions are iteratively undertaken to isolate and then restore supply. Supply restoration is often partial where normally open points or alternate feeds are used to back feed to the healthy parts of the system isolated from the primary supply by the fault. As the manual actions are completed, the operator, having received confirmation from the field, enters the connectivity changes into the DMS (TCM) OMS network model. The outage engine automatically keeps track of the changes and the event. Thus at all times the utilities call taker is aware of the customers still without supply and the prognosis of the situation.

2.8 DECISION SUPPORT APPLICATIONS

Included in advanced applications, in addition to the FLIR function, are other decision support applications that can be employed independently or as support within the FLIR function. Although these are designed to work in real-time environments, their most frequent mode is as operational planning tools in which

the operator plans for contingencies, changes in normal switching configurations, and planned switching actions. When used in the real-time environment, they are usually triggered in one of three optional ways:

- Manually — on operator demand
- Cyclically — in the background at a predefined cycle (say, every 15 minutes)
- Event driven — on a change to the network configuration as the result of a switch operation or significant load change

In order to reduce the computation load in a vast distribution network, the topology engine is set to identify only the parts of the network that have changed since the last calculation. The calculations are then restricted to the changed areas of the network.

2.8.1 Operator Load Flow

This function provides the steady-state solution of the power network for a specific set of network conditions. Network condition covers both circuit configuration and load levels. The latter is estimated for the particular instance through a load calibration process that adjusts static network parameters (as built) with as much real-time data as possible available from SCADA. The calibration methods typically operate in a number of discrete steps. The first step is a static load calibration. Input for this calculation is the static information, like load profiles, number of supplied customers, and season. The results are static values for the active and reactive power consumption. The second step is a topological load calibration. This function uses the static results of the power consumption, the latest measurement values, and the current topology of the network to determine dynamic values for the active and reactive power consumption. The topology engine determines, for meshed network, islands of unmetered load points supplied from metered points, whereas for radial systems, the analysis is a fairly trivial tree search for the upstream metered point. These values are used as pseudo measurements together with the real measurements as input for a state estimation that comprises the third step. This final step adjusts the nonmeasured values and any missing values to represent the state of network loading with losses included.

Fundamental to the load calibration process is the load model employed. Different power utilization devices (lighting, air conditioners, heating load, etc.) exhibit particular load characteristics. These characteristics are represented by one of three types, constant power, constant impedance (lighting), and constant current, each exhibiting a different voltage dependency (Table 2.2).

At any distribution load point such as an MV/LV substation, there is a high probability that different types of load will be connected. These load types may be inherent in the load classification or customer class (commercial, residential, industrial). Thus, all loads can be described as a combination of the three characteristics by assigning a percentage factor to each characteristic.

TABLE 2.2
Typical Nonlinear Load Types Showing Voltage Dependencies

Behavior	Factor Name	Voltage Dependency
Constant power (SCP)	F_{CP}	None
Constant impedance (SCI)	F_{CI}	Quadratic
Constant current (SCC)	F_{CC}	Exponential with exponent P, Q where $0 \le P, Q \le 2$

$$P_{load} = P_{CP} + P_{CI} + P_{CC} = P_{load} \times F_{CP} + P_{load} \times F_{CI} + P_{load} \times F_{CC}$$

$$Q_{load} = P_{load} \times (\sqrt{(1 - (\cos\varphi)^2}) / \cos\varphi$$
$$= Q_{CP} + Q_{CI} + Q_{CC} = Q_{load} \times F_{CP} + Q_{load} \times F_{CI} + Q_{load} \times F_{CC}$$

The default values are often assigned to these models for both the percentage contribution and the exponential components of the constant current exponent.

In addition to voltage dependency, loads at the distribution level [2] vary over time and are described by daily load profiles. Loads peak at different times, and when combining loads, the difference between the addition of all the individual peaks compared to the peak of the sum of the load profiles is called load diversity. Diversity exists between loads of the same class (intraclass diversity) and between different classes (interclass diversity). The higher up the system that the loads are accumulated, the less the diversity. Thus, to model loads accurately for analysis at different times of the day, the application of load profiles is recommended. Load profiles for typical load classes are developed through load research at an aggregation level of at least 10 loads per load point. Thus, loads can be represented by one class or a combination of classes. Load classes also vary from season to season and from weekday to holidays to weekends.

The load models for operator load flows must be able to represent loads with limited or more expansive information. Three different ways of modeling the active and reactive power values P and Q follow:

Single Point Value Based. Typical load based on installed KVA or other predefined magnitude, say, peak value. A fixed typical load S_{typ} and a power factor cos φ (each defined per individual load) is used to determine the active and the reactive power consumption.

$$P_{load} = S_{typ} \times \cos\varphi \quad \text{and} \quad Q_{load} = S_{typ} \times \sqrt{1 - \cos^2\varphi}$$

A single point load description does not reflect the time-dependent consumption patterns of loads at the distribution level nor load diversity.

Profile Customer Class Based.* The 24-hour normalized load profiles for different seasons are available for the load point when used in conjunction with the single load value; this allows some representation of diversity and a more accurate value for calibration at times different from that of single load value, thus incorporating time dependency into the load model.

$$P_{load} = S_{typ} \times L_p\,(season,\ day\ type,\ hour) \quad \text{and}$$

$$Q_{load} = S_{typ} \times L_Q\ (season,\ day\ type,\ hour)$$

This can be extended for the values of the active and the reactive power for each type of voltage dependency (P_{CP}, P_{CI}, P_{CC}, Q_{CP}, Q_{CI}, and Q_{CC}), which are calculated individually first. Additionally, the customer classes (CC) are distinguished:

$$P_{XX} = \sum_{CC} S_{CC}(season) \times F_{XX,CC} \times n_{CC} \times L_{P,CC}(season,\ldots)$$

$$Q_{XX} = \sum_{CC} S_{CC}(season) \times F_{XX,CC} \times n_{CC} \times L_{Q,CC}(season,\ldots)$$

$$XX \in \{CP, CI, CC\}.$$

Billed Energy Based. The metered (billed) energy E_{Bill} and the number of supplied customers n for one transformer is used:

$$P = \Sigma(E_{billed} LF_c)/DF_c \quad \text{for all customers 1 to n,}$$

where LF_c = load class load factor and DF_c = load class diversity factor. In a second step, the value of S_{Bill} is used as typical load in the formulas of method 1.

There is a general priority list, which defines the preferred calculation method. For each load, which input data are available is checked. If input data for more than one calculation method are available, the method with the highest priority is used. The output of the static load calibration is used as input for the topological calibration.

2.8.2 Fault Calculation

There are two categories of fault type — balanced or symmetrical — three phase faults and asymmetric faults when only two phases or ground is involved.

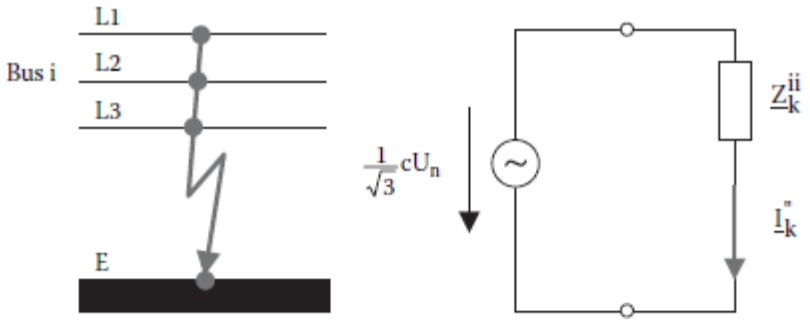

FIGURE 2.15 Three-phase balanced fault. (Courtesy of ABB.)

The symmetrical short circuit analysis function is defined by IEC 909 in which initial values of node/bus voltages provided by the load flow calculation (LFC) are neglected.

The fault calculation function for a three-phase balanced fault (L1-L2-L3-E) remote from a generator simulates a fault on every bus in the electrical power system (Figure 2.15). For each fault case, the initial symmetrical short circuit current at the bus and the currents in the connected branches are calculated. Based on Thevenin's theorem, the current is determined by

$$I_k^{"} = -\frac{c \cdot U_n}{\sqrt{3} \cdot \underline{Z}_k},$$

with the nominal voltage U_n, the voltage factor c, and the short-circuit impedance of a three-phase system $\underline{Z}_k$. The factor c depends on the voltage level. In addition, the initial symmetrical short circuit apparent power and the fault voltages at the neighboring buses are determined.

Asymmetrical Short Circuit Analysis. The following types of unbalanced (asymmetrical) short circuits are typically calculated by the asymmetrical short circuit analysis functions:

- Line-to-line short circuit without earth connection (Figure 2.16a)
- Line-to-line short circuit with earth connection (Figure 2.16b)
- Line-to-earth short circuit (Figure 2.16c)

The calculation of the current values resulting from unbalanced short circuits in three-phase systems is simplified by the use of the method of symmetrical components, which requires the calculation of three independent system components, avoiding any coupling of mutual impedances.

Using this method, the currents in each line are found by superposing the currents of three symmetrical components:

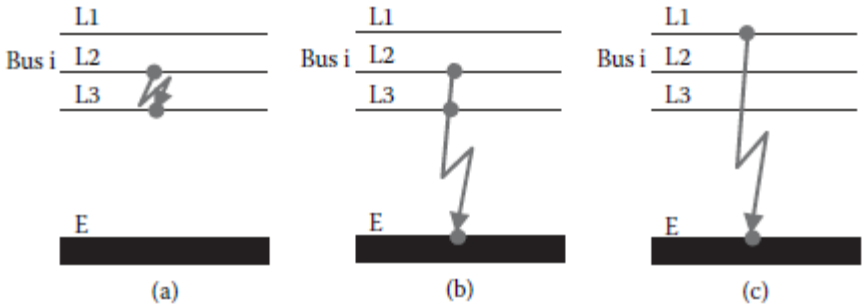

FIGURE 2.16 Three-phase unbalanced faults. (Courtesy of ABB.)

- Positive-sequence current $\underline{I}_{(1)}$
- Negative-sequence current $\underline{I}_{(2)}$
- Zero-sequence current $\underline{I}_{(0)}$

Taking a line L1 as a reference, the currents I_{L1}, I_{L2}, and I_{L3} are given by:

$$\underline{I}_{L1} = \underline{I}_{(1)} + \underline{I}_{(2)} + \underline{I}_{(0)}$$

$$\underline{I}_{L2} = \underline{a}^2 \underline{I}_{(1)} + \underline{a}\underline{I}_{(2)} + \underline{I}_{(0)}$$

$$\underline{I}_{L3} = \underline{a}\underline{I}_{(1)} + \underline{a}^2 \underline{I}_{(2)} + \underline{I}_{(0)}$$

$$\underline{a} = -\frac{1}{2} + j\frac{1}{2}\sqrt{3} \; ; \; \underline{a}^2 = -\frac{1}{2} - j\frac{1}{2}\sqrt{3} \; ,$$

where $a = 120°$ operator.

Each of the three symmetrical components systems has its own impedance that reflects the type, connection, and grounding (transformers) of the network equipment and must be entered into the distribution model database.

The method of symmetrical components postulates that the system impedances are balanced, as represented by balanced line geometry and transposed lines, although the absence of the latter gives insufficient error in distribution networks.

Breaker Rating Limit Check. The main use of the fault calculation in a DMS is to determine whether a circuit breaker will be operated above its rating, and thus an alarm can be created to notify the operator if an operating state would be a violation.

2.8.3 Loss Minimization

The loss minimization application provides a comprehensive method for investigation of the reduction of radial distribution network real losses through network reconfiguration within specified operating constraints. The loss minimization application has the following features:

- The ability to identify switching changes for reduction of distribution losses.
- The ability to calculate the necessary reallocation of load among feeders to reduce distribution losses.
- The capability to verify that the proposed optimized system condition is within the allowable operating limits (capacity and voltage).
- The capability to run cyclically or to run at a specified time each day and to execute on operator request. Similar to the load flow, computations will only be run on the portion of the network affected by changes (switching, incremental load adjustments, etc.).
- The capability to restrict the optimization to use remotely controllable switches only.

The function always starts from a feasible system base case. In the event that the as-operated base case is infeasible (constraints violated), the loss minimization function will first determine (advise) a feasible state. Starting with this state, a list of switching actions and the associated reduction in losses will be listed. Each successive switching action will provide increased loss reduction. The sequence of switching actions, which may involve multiple switching of the same switch, is specifically prepared to ensure that at no time during the sequence will any equipment be overloaded or voltage limit exceeded.

2.8.4 VAR Control

The VAR control function is designed for the control of MV capacitor banks located at HV/MV substations and on MV feeders. The function determines radial systems capacitor configurations that reduce reactive power flows into the MV system, while maintaining the system within user-defined voltage and power factor operating limit conditions. The resulting capacitor configuration reduces MV feeder voltage drops and losses under varying system load conditions.

VAR control functions usually produce MV network local capacitor control strategies on an individual HV/MV substation service area basis. A typical calculation sequence is as follows:

Step 1. Determine the service area operating state regarding VAR compensation. Three scenarios are possible:

- The service area is in a normal state. This is determined by comparing the actual total service area power factor (as measured by SCADA)

with the target power factor and by the nonexistence in the MV feeders of high/low voltage and power factor limit violations (as calculated by state estimation).

- The service area needs VAR compensation. This is determined by comparing actual total system power factor with the target and by the existence in the MV feeders of low voltage and power factor limit violations.
- The service area is in an over-VAR compensated state. This is determined by comparing actual total system power factor with the target and by the existence in the MV feeders of high voltage and power factor limit violations.

Step 2. The target total system power factor is user defined.

User-defined deadbands and threshold values are used in the determination of the service area operating state to reduce the number of VAR control application runs.

Operating states 2 and 3 represent candidates for VAR control. The availability of controllable capacitor banks in these service areas also determines whether the VAR control application is executed or not on the particular service area.

Certain assumptions are made to simplify the calculation yet achieving results within the system operating tolerances. Typical assumptions include that all MV-level VAR adjustments will not be reflected in the higher voltage networks and that all tap changing equipment (transformers and line regulators) will be held constant. Further, that common practice of employing a limited number of capacitor banks on feeders will be adopted.

2.8.5 Volt Control

The volt control function is designed for the control of on-line tap changers (OLTCs) associated with substation transformers and line voltage regulators with the objective to reduce overall system load. Typically, this function is used at times when demand exceeds supply or flow of power is restricted due to abnormal conditions. The function calculates voltage set points or equivalent tap settings at the OLTCs to reduce the total system served load.

The calculation method supports two load reduction control strategies:

Target Voltage Reduction. The first method reduces the system load in such a way that a lowest permissible voltage level is not violated. The maximum load reduction is, therefore, a function of the user-defined lowest permissible voltage level.

Target Load Reduction. The second method determines the system voltage level required to achieve a user-defined load reduction target.

Calculation Method. Calculation methods follow a similar approach to VAR control. An area is first selected where load reduction is required. For example, consider Figure 2.17, where a sample system of three radial feeders is described. Each of the three feeders has different lengths (hence impedance), total load, load distribution, and number of line regulators.

The first step is to determine which HV/MV substation service areas are candidates for OLTC volt control. The criteria used reflects

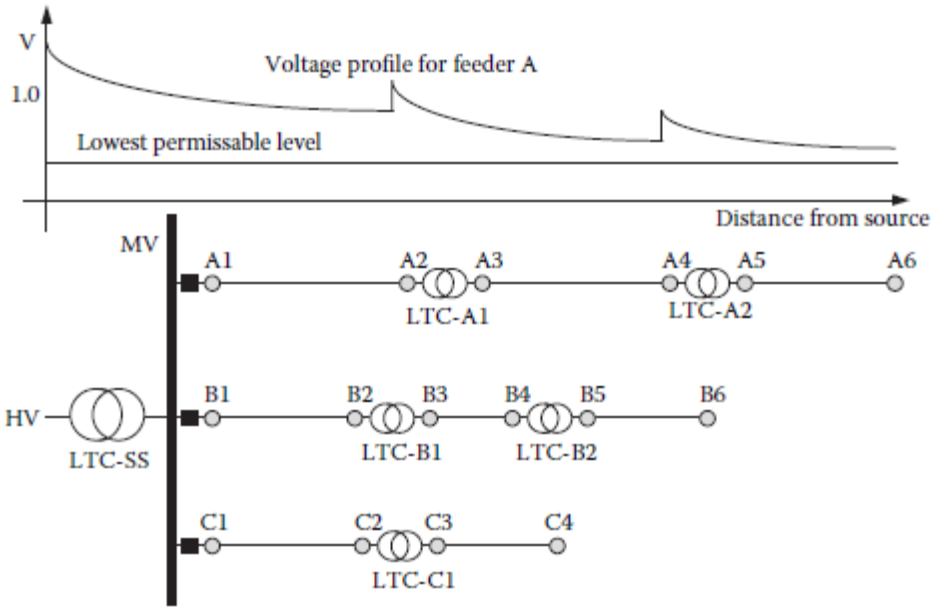

FIGURE 2.17 Example network showing line voltage regulators. (Courtesy of ABB.)

- The availability of OLTCs for control as determined by SCADA
- User-defined active power limits

Each candidate substation service area is analyzed one at a time using one of two possible calculation methods.

Again, corresponding assumptions similar to the VAR control function allow realistic performance of the calculation for control room use.

2.8.6 Data Dependency

The validity of results from all advanced applications are entirely dependent on data availability and its quality. The first level of data is that of the network topology. The connectivity of the network incorporating the status of switches must be correct, because fundamental operating decisions and maintenance of safety use this as the basis. Maintenance of remotely controlled switch status is automatic within the SCADA system but all manually operated switch statuses have to be manually input by the operator from information communicated from the field. The normal state of network configuration must be stored during temporary switching to enable restoration to the normal state as defined by NOPs. As extensions are made to the network, all changes added to the DMS have to be synchronized with the actual field state. The data modeling becomes more complex for North American networks where each phase needs to be represented due to the mix of three- and single-phase supply and where switching devices can open one phase independently. Outage management and basic switching plan generators within the advanced applications portfolio depend entirely on correct topology (connectivity) for valid results.

Advanced applications that perform calculations on the network such as power flow, fault level, loss minimization, and optimization require another level of data describing network parameters such as circuit impedances, capacity limits, and loads. The latter are the most difficult to determine not only because the time variation of consumption differs from customer class to customer class, but also there is voltage/current dependency. Few real-time measurements of individual customer loads or composite customer load groups exist except at the substation feeder sources. The most commonly available value at customer substations is an annual peak load value that is manually collected after the system peak has occurred and is seldom time-stamped. The implementation of automatic meter reading, even though not widespread, is improving load behavior information. However, the automatic readings are normally not real-time values but historical energy consumption values. Devices within the network with local control such as line voltage regulators and capacitor controllers require additional data of their control behavior such as set point, and deadbands to describe their operation.

The issue of data accuracy and sustainability must be considered when setting the expectations and benefits derived from the advanced applications performing network analysis calculations. It is not just the initial creation of the DMS database that requires considerable effort, but also the cost of maintaining its accuracy in an ever-changing environment.

It can be concluded that DMS advanced applications should be divided into two categories: those that operate satisfactorily with topology only and those that in addition to topology require network parameter data as shown in Table 2.3. The former will give results that are unconstrained by network capacity limitation and must rely on the operator's knowledge, whereas the latter consider the constraints of the network capacity and voltage regulation.

In utilities with good planning practices where a detailed network model of the MV system has been created and verified, this model provided of sufficient granularity in terms of switch and feeder representation, and can be used as the foundation of the DMS connectivity model.

The concept of value versus data complexity is illustrated in a subjective manner in Figure 2.18, where a data complexity and sustainability factor is assigned a value between 1 and 10. Similarly, the value to the operator of the results from a constrained advanced application can also be assigned between 1 and 10. The ratio of the two values, the Value to Complexity Ratio (VCR) illustrates subjectively the potential benefits and distinguishes between unconstrained and constrained applications.

2.9 SUBSYSTEMS

2.9.1 Substation Automation

Traditional SCADA systems acquire the majority of data on the power system from substations. This has been achieved by installing RTUs, hardwired into the

TABLE 2.3
Categorization of Advanced Applications

Application	Topology-Based (Unconstrained)	Parameter-Based (Constrained)
Network coloring	✓	
Switch planner	✓	✓[a]
FLIR	✓	✓[a]
Operator load flow		✓
Fault current analysis		✓
Volt/VAR control		✓[a]
Loss min/optimal reconfiguration		✓[a]

Note: Some functions will operate without the need for the power flow to give meaningful results such as the case of a switch planner and FLIR that could be implemented initially as unconstrained applications, thus reducing the need to collect and verify additional complex data.

[a] Applications operating under constraints require the load flow as an integral part the application.

protection relay and switch auxiliary contacts, as the communications interface to the central control system. This approach was costly and restrictive, not using the full capability of modern communicating relays. Substation automation (SA) describes the concept that takes advantage of the configurable communication IED technology in implementing a local multilayer control hierarchy within a substation. Logically there are two levels, the lower or bay (feeder) and the higher or station level. Suppliers have adopted different architectures for SA. These architectures use either a two or three information bus configuration — the difference being where the protection intelligence is located. The three-bus approach retains the segregation of the protection logic and device at each bay, whereas the two-bus architecture uses a common central processor for all protection. The former approach has been favored because it reflects traditional protection philosophy.

The main varieties of SA platforms being marketed that attempt to integrate the distributed processing capabilities of the many IEDs are as follows:

1. **RTU-Based Designs.** These systems evolved from conventional SCADA where RTUs were modified to provide the communications interface with, and utilize the distributed processing capability of, modern IEDs. Some RTUs have added limited PLC functionality and de facto standard sub-LAN protocols such as Echelon LONWorks or Harris DNP 3.0. The main disadvantage of this approach is the inability to pass through instructions to the IEDs in a one-to-one basis because they effectively appear as virtual devices to the central control room.

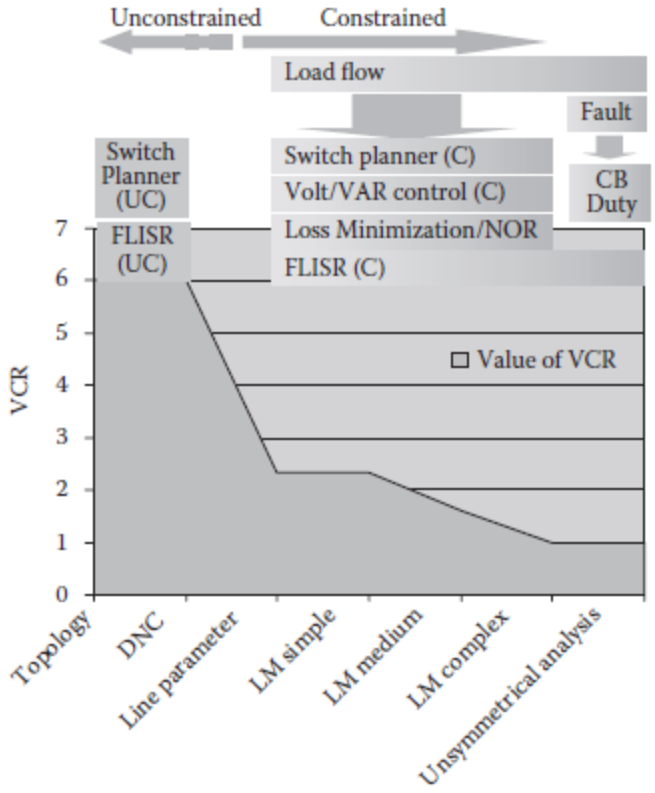

FIGURE 2.18 Subjective benefits versus data creation effort for different data categories and associated DMS advanced applications where DNC = dynamic network coloring, LM = load model with simple being a one-value model based on installed distribution transformer capacity, medium is represented by an estimated load value and estimate of voltage dependence, and complex requires in addition to the first two model types load profiles of typical days. Unsymmetrical analysis refers to applications requiring unbalanced loads and sequence impedances.

2. **Proprietary Designs.** These are fully functional, modular, distributed systems provided by one supplier using proprietary architectures and protocols. The systems are not open because the full protocols are not published and the HMI is vendor specific to their IEDs and architecture. Any extension of the substation is confined to the original SA supplier's equipment.
3. **UNIX/PLC Designs.** These systems use RISC workstations operating under UNIX integrated with PLCs to give very high-speed multitasking solutions. The resultant cost is higher than other platforms.
4. **PC/PLC Designs.** The design of these systems is based around a sub-LAN with the PC providing the HMI and integrated substation database. The PLC supports customized ladder logic programs designed to replace conventional annunciators, lockout relays, and timers. Because the sub-LAN communication protocol is usually dictated by the selection of PLC, the PC protection IEDs require special gateways

TABLE 2.4
Summary Comparisons of the Main Features of the SA Alternatives

Feature	RTU Based	Proprietary	UNIX/PLC	PC/PLC	Black Box
			SA Design Type		
HMI operating system	Windows, DOS	Proprietary	UNIX	Windows	Windows
HMI software	Limited	Proprietary	HP, SI, US Data	Many	Proprietary
Sub-LAN protocol	LONWorks, DNP	Proprietary	PLC based	PLC based	VME bus
IED support	Protocol conversion	Proprietary	Protocol conversion	Protocol conversion	Self-contained
Comparative functionality	Medium	Limited to products from a single vendor	High	High	Medium
Cost	Middle	High	Middle to high	Middle	Low
Major suppliers	Harris, SNW, ACS	ABB, Schneider, GE, AREVA	HP, SI	Tasnet, GE K series, Modicon, Allen-Bradley	RIS

and interface modules. The resulting integration issues are not trivial if devices from different vendors are used but the approach has a degree of openness.

5. **Black Box Designs.** These systems are designed to integrate, within a single PC framework, selected SA functions. All functions such as programmable protection, ladder logic, input/output (I/O), and front panel annunciation are achieved within one common PC server. The main disadvantage is that protection is centralized, which deviates from the conventional protection philosophy of individual circuits having independent protection.

Comparison of the different SA types described is summarized in Table 2.4. The benefits in flexibility with primary and secondary configurations can be substantial.

2.9.2 Substation Local Automation

The most common architecture in use today, whether proprietary or not, is that where each bay has independent protective devices, thus it is worth expanding on more of the details of this design. The protection and control units act

independently in cases of a disturbance, cutting off the faulty portion of the network. The same protection relay and control units have a communications bus and thus act as data transfer units to local systems or telecontrol systems, replacing the conventional RTUs. Communicating annunciators can also be connected to the overall system. All data acquisition devices are connected through a common communications bus that is used to transfer the data to the local or telecontrol system through a data communications unit, if needed. The protection relays, control units, and alarm centers provide the operating systems with the following:

- Time-stamped event data
- Measured electrical quantities (directly measured and derived)
- Position data for switching devices (circuit breakers and disconnectors)
- Alarm data
- Digital input values
- Operation counters
- Data recorded on disturbances
- Device setting and parameter data

The local or telecontrol (SCADA) system can send the following to the units:

- Control commands
- Device setting and parameter data
- Time synchronization messages

Using the communications bus provides several technical and economic advantages compared with conventional signal cabling. The need for cabling is considerably less when much of the necessary information can be transferred through one bus. Intermediate relays are not needed, either. On the other hand, the feeder-specific current transducers and circuits can be discarded, because the measurement data are obtained through the protection circuits. As less cabling and a smaller number of intermediate relays are needed, the fault frequency of the substation is reduced. Protection relays can be used for condition monitoring of secondary circuits, such as tripping circuits. The actual transfer of messages is also monitored, and communication interruptions and faults can be instantly located. Systems are easier to extend, because new units can be easily added thanks to this communications principle.

Each device provides a time-stamped message on events (starting, tripping, activation, etc.) through the bus. These events are sorted by time and transmitted to the event printers or to the monitoring system. Data covered include maximum fault current data, the reason for starting or tripping, and fault counters. Device setting and parameter data can also be conveyed by control units, and commands from the control system can also be transmitted to the switching devices in the same way. Microprocessor-based relays and control units store a lot of data on

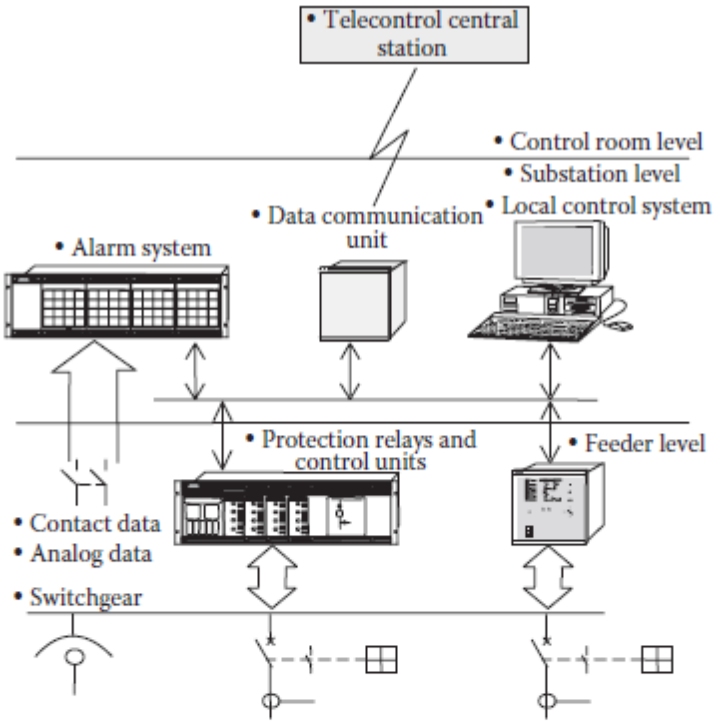

FIGURE 2.19 Typical substation local automation design. (Courtesy of ABB.)

faults occurring in various registers. Also, the devices can provide current and voltage measurements. The devices may also have calculation routines providing the power, energy, and power factor derived from the measured current and voltage values. These data can be used locally or by the telecontrol system.

Each device in the system has its own internal clock, which must be synchronized with the other clocks in the system. Events and other important messages are time-stamped in the secondary device. The messages can be sorted by time on the basis of this time-stamp. To keep the clocks synchronized, a synchronization message aligning the clocks to millisecond accuracy is sent out at regular intervals.

The substation level has supervision or control systems to perform centralized automation functions at the substation level. These local control systems (Figure 2.19) are based on the same concept and technology as the SCADA system. However, they are more basic in terms of equipment and software than the SCADA system, and are scaled for use at the substation level. Functions typically performed at substations include the following:

- Schematic mapping of substation and switch position indication
- Presentation of measured electrical quantities
- Controls
- Event reporting

- Alarms
- Synchronization
- Relay settings
- Disturbance record collection and evaluation
- Processing of measured data, trends, power quality data, and so on
- Recorded data on faults and fault values
- Network primary device condition monitoring
- Substation level and feeder level interlocking
- Automatic load disconnection and reconnection
- Various regulations (voltage regulation, compensation, earthing coil regulation)
- Connection sequences on bay and substation levels (e.g., busbar or transformer change sequences)

Technically, it is possible to integrate similar functions in a single device. One protection package can contain all the protection functions needed for the feeder in question. A protection relay can also incorporate control, measurement, recording, and calculation functions. Protection relays can provide disturbance records, event-related register values, supply quality and consumption measurements, and counter and monitoring data. The number of inputs and outputs available in the protection packages are increasing, and thus all the data related to a feeder can be obtained centrally through the relay package. The more data there are to be processed, the more economical it is to link the data through one sufficiently intelligent device. Also, communications devices are becoming smaller and smaller. Linking of occasional data (door switches, temperature, etc.) to the system via small I/O devices will become economically feasible. Thus, this type of data will also be available centrally in local systems and at the master station SCADA systems.

Control Units. Necessary protection and control functions have been integrated into the feeder protection packages. A feeder-specific control unit provides position data on the switching devices of the feeder, and the unit can be used for controlling the motor-operated switching devices of the switchgear locally. Control units can also be used to perform bay-specific interlocking. Position data and measurement, calculation, and register data of the control unit can also be transferred to the local or telecontrol systems through the communications bus, and the local or telecontrol system can control the motor-operated switching devices of the feeder through the control unit.

Annunciator Units. The annunciator collates contact alarm signals from all over the substation or distribution process. The data, obtained as analog messages, are sent to the analog annunciator, which generates alarms according to preprogrammed conditions. The purpose of the annunciators is to facilitate management of disturbances. Typically, an annunciator broadcasts first-in alarms showing the origin of the disturbance. The annunciators can be programmed with alarm delay times, alarm limits, alarm blinking sequences, or alarm duration, for instance.

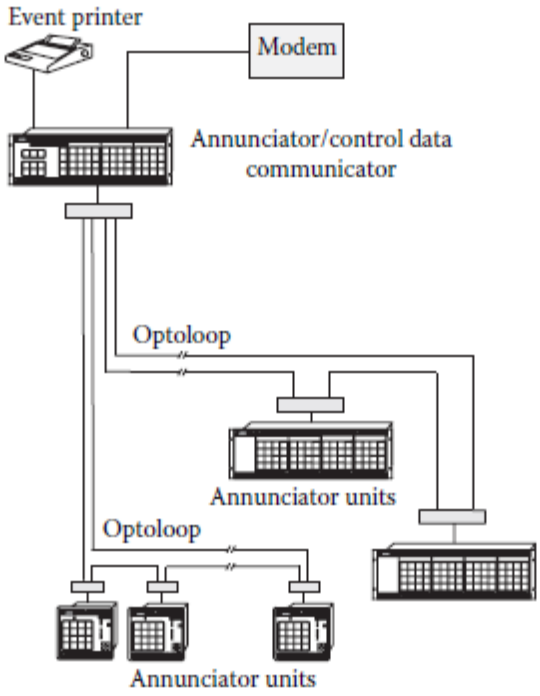

FIGURE 2.20 Typical alarm system. (Courtesy of ABB.)

The contact functions of the annunciators can be opening or closing. In addition, alarms can be programmed to be locked to each other in order to avoid unnecessary alarms caused by the same fault. For remote supervision, the annunciators have two or several programmable group alarm outputs, which can indicate whether an alarm demands immediate action or is merely given for information. These groups can be programmed as desired. The annunciators can also be linked to the substation communications bus, thus providing information for local or telecontrol systems. In small substations, a control data communicator integrated into the annunciator can be used to collect data from the entire substation. For event reporting, an event report printer can be directly connected to such an annunciator (Figure 2.20).

Disturbance Recorders. Disturbance recorders have become more popular in fault diagnosis and post-fault analysis. Disturbance recorder functions are, nowadays, integrated into protection devices. Disturbance recorders provide curves of analog values such as currents and voltages before and after a fault, and digital data such as autoreclose event sequences before and after a fault. The channel number, sampling rate, and signals monitored can be programmed separately for each purpose. A disturbance recorder can be triggered on set conditions in the signal monitored, or by a triggering message received over the communications bus. Disturbance recordings can be downloaded through the communications bus and analyzed in a separate computer program. Data from the disturbance recorders can also be fed into standard programs such as spreadsheet and calculation programs for further analysis.

2.10 EXTENDED CONTROL FEEDER AUTOMATION

Extended control as discussed earlier is a general term for all remote control and automation of devices outside the substation and includes all devices along distribution feeders such as switches, voltage line regulator controls, feeder capacitor controls, and devices at the utility customer interface such as remotely read

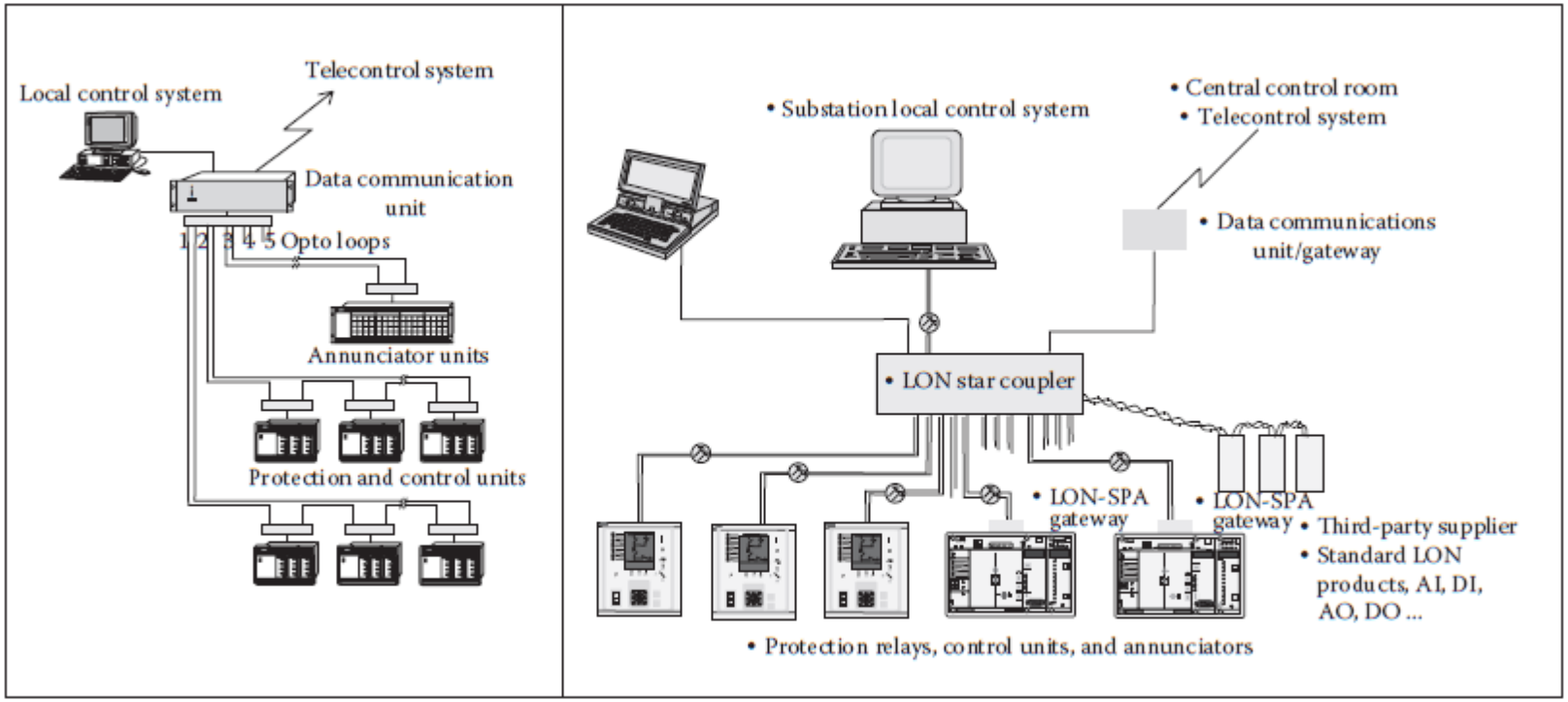

FIGURE 2.21 (Left) Proprietary bus layout and (right) LON bus layout. (Courtesy of ABB.)

intelligent meters. All line devices fall under the feeder automation umbrella, which is the major topic of this book and thus is treated in more detail in subsequent chapters once the foundation of distribution system type and protection has been covered. Feeder line devices are controlled either directly from the DMS master station or via the normal supplying primary substation RTU or SA server. Much depends upon the communications infrastructure established and whether the architecture is based on distributed data concentrators such that the feeder device IEDs become virtual devices when viewed from the DMS master through the concentrator. Whatever the configuration, all devices will eventually be controlled from a central location.

2.12 DATABASE STRUCTURES AND INTERFACES

One of the challenging issues within a DMS is the resolution of different data structures that potentially exist between the various applications, both internally within the SCADA, the advanced applications, and outage management function and externally with the enterprise IT functions such as GIS, work management (CMMS, ERP),* and customer information management (CIS/CRS).

2.12.1 Network Data Model Representations

Data models for representing the electrical network with varying degrees of detail have developed in the industry as appropriate to the application using the data. These are described pictorially in Figure 2.23.

All the models have a node branch relation model because this most efficiently describes connectivity. The most detailed representation is required for the operations model where all devices and operational constraints have to be represented as unique entities not only for network analysis but also to fit into the SCADA data model for the control and monitoring task. Even this complexity of model is simplified compared to the asset model usually held in GISs or in CMMSs where every asset and its details are required for inventory and maintenance purposes. In particular, within a GIS every cable size and joint for underground networks is recorded, and similarly for overhead systems, points where conductor sizes and pole geometry changes are identified. This level of detail is not required for the real-time DMS network model; hence, if data are to be provided from a GIS system, some form of model reduction must be available to extract a composite branch representation. This concept permeates throughout the asset database depending on the particular granularity of the GIS data model implemented.

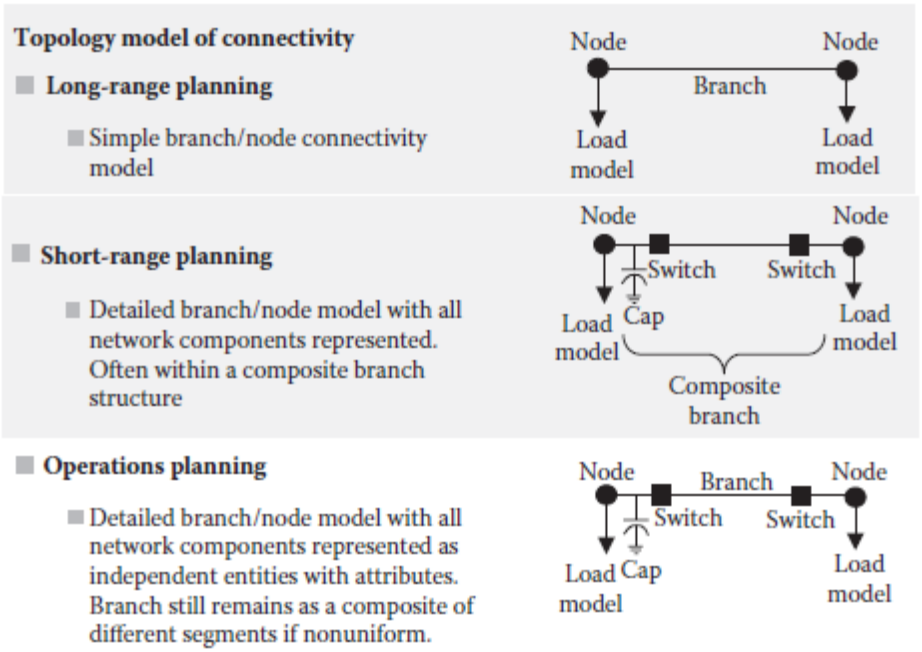

FIGURE 2.23 Three levels of network model, the operations planning model being the most complex with highest device resolution.

2.12.2 SCADA Data Models

Traditionally, SCADA systems applied to power systems employ a hierarchical structure of the power system consisting of station, substation, bay, and terminal. This is needed to explicitly model all the components that affect network operation. A simple switch within a substation must be part of a bay, and a line is a terminal interconnect between bays in different substations. Topology for network models must be interpreted from this structure. In contrast, network application functions (advanced applications) only require a simplified equivalence of the structure. In fact, to be effective this equivalence must be specifically based on a branch-node structure, where the branches connecting the nodes represent nonzero impedance elements such as lines and transformers. Methods are now coordinating these two requirements by generalizing the two levels of network topology nodes and branches into vertices and edges.

A vertex or terminal is defined as a fixed point in the network that is described by the SCADA hierarchy — each single layer not being allowed to overlap. An edge is an arbitrary connecting element that can include an impedance-bearing element such as a line or a zero impedance element such as a switch or busbar. This method permits, in the simplest form, rapid analysis of the structure's connectivity because only the status of the edge needs to be considered. The analysis can be extended in complexity by considering the type of edge; for example, treating a transformer as an open edge breaks a multivoltage level network to its discrete networks of the same voltage level. This architecture allows

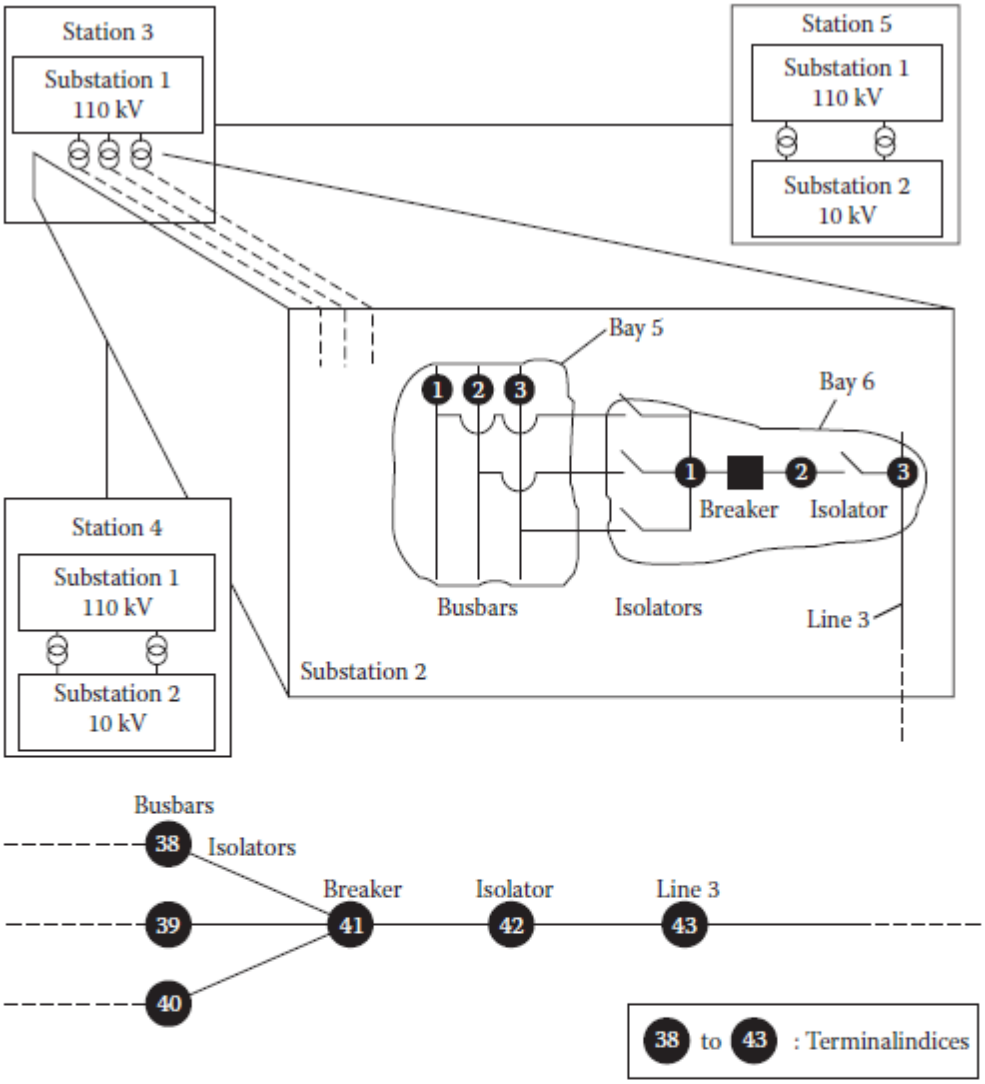

FIGURE 2.24 Diagram showing development of vertex/edge model from traditional SCADA data structure. (Courtesy of ABB.)

very fast real-time assessment of the connectivity state and de-energization, which is also used for dynamic network coloring.

The SCADA system real-time database is described in terms of point and data acquisition data (RTU and ICCP*), where every point must be defined at input in a very flat structure. This flat structure with no inherent relationships has to be built into a process model as discussed previously in the SCADA section.

The SCADA data model concept in simplified form is shown in Figure 2.25. Point data comprises either a measurement or an indication. These data have no practical meaning unless linked to a picture, so in the most simplest form of pure SCADA, these two categories of point data have to be linked to a position in a

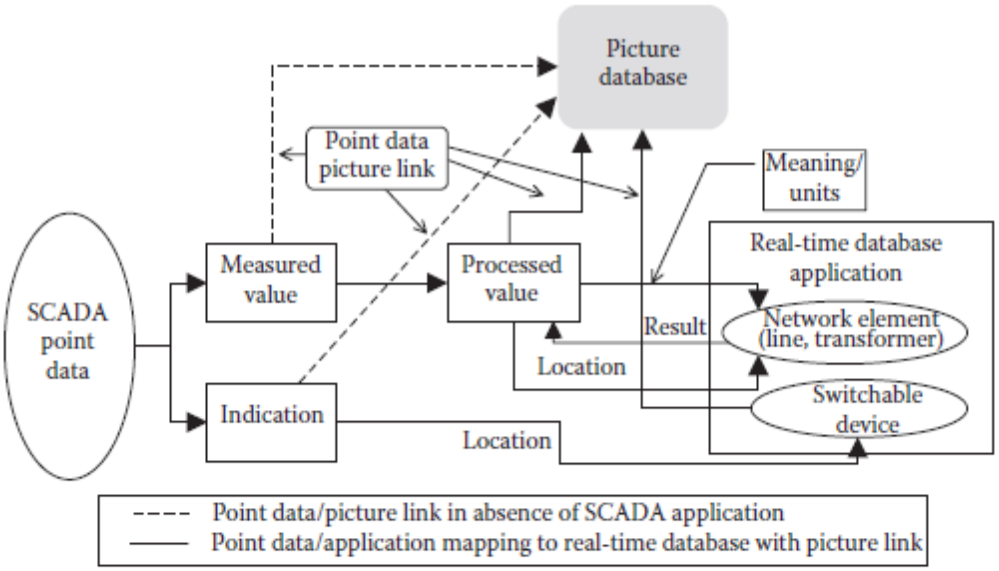

FIGURE 2.25 Simplified structure of SCADA real-time data model.

SCADA picture (dotted line in Figure 2.25). Practical SCADA systems, though, have applications that run in the real-time database, so an additional mapping to the network model is required before linking to the picture.

Schematic diagrams available in GISs are generally not satisfactory for use in a control room for monitoring and controlling the distribution network. Therefore, SCADA systems require additional picture data to describe their graphical displays. These data describe all picture objects in terms of text, value (measured value and its location to be displayed), and symbol or drawing primitive. Picture data and object data must be linked to the same SCADA device or element associated with the point data.

In addition, the data acquisition system connection through point addressing to the RTU also has to be described at input.

All this data input is coordinated and verified for consistency as part of the data engineering process.

2.12.3 DMS Data Needs, Sources, and Interfaces

SCADA/DMS data are input via the data engineering process, which is composed of creating pictures and linking the corresponding point data with the picture data. Integrated graphical tools that ensure data consistency are employed in modern systems, with a checklist to guide the user in completing all required data elements before populating the real-time database. Many data (Table 2.8) are resident in other enterprise IT applications, and it is natural to assume data can be transferred through standard interfaces between applications.

Few standard interfaces exist at present in the industry, and even if emerging standards are applied, any differences between the data models used by the

TABLE 2.8
Typical Data Maintained in Enterprise IT Systems

Enterprise IT Application	Data
CIS/CRM (customer information/customer relationship management system)	Consumer data Account number Telephone number Customer class/rate class Consumption (kWH) Customer-network link locator/ID (needed for trouble call/OMS), etc.
GIS (geographical information system)	Power system element data Network parameters Load values Connectivity Geographic maps (electrical network/background street maps) Single-line diagrams (not always maintained), etc.
CMMS/WMS (computer maintenance management system/work management system)	Asset maintenance and performance records Manufacturer, type, serial number Date of commissioning Belonging to hierarchical structure Reference to product documentation Maintenance requirements modeling Dependency of network on device for RBM[a] Maintenance history Planned maintenance Work order and job scheduling Costing Maintenance management, etc.
PMS (personnel management system)	Personnel records and details (needed for crew management) Field workforce skills/authorization levels Contact details Vacation schedules Overtime limits, etc.

[a] RBM — risk-based maintenance.

respective application must be resolve in implementing the interface. The data transaction frequency and performance requirements will differ between the applications. For example, the provision of consumer changes to a trouble call/OMS system from the CIS are such that a batch update once in 24 hours is sufficient, whereas the maintenance of correct topology within the same application is crucial and will require real-time data transfer from the SCADA system

for all network connectivity changes. These will become excessive during storm conditions and for systems with a high AIL.

The most complex interface is that between the SCADA/DMS and GIS systems, because not only do data model inconsistencies have to be resolved but the level of interface has to be decided in not only the design of the DMS but, more importantly, the degree of data modeling and extent of data population within the GIS. The previous remark applies to the connectivity and parameter model for electric network applications. In addition to the network data, are the two other data categories covering the following:

- Picture data (symbology, coloring, text placement, measurement display, etc.)
- SCADA data (point data, data acquisition system addressing, etc.)

The data maintenance responsibility within the utility organization has to be defined in terms of not only the master database for the as-built and as-operated network but also the data change process for updating each of the views. Such a decision is crucial to the master direction of data flow of the interface, plus the frequency and type of data to be transferred. Different levels of interface have been established within the industry often dictated by a legacy implementation, particularly for GISs where the database had been populated for asset management application only and sometimes expanded to include supporting engineering applications. The level of interface possible is dictated by the exact implementation of the various IT systems due to the data availability within the implemented data model. Differences predominate even if the applications are implemented at the same time but by different autonomous departments without completion of an enterprise wide data architecture design study. At present, without standards and guidelines within the industry across all the issues above, every GIS/SCADA/DMS interface has to be customized using common IT data transport mechanisms (CSF, ASCII, XML). Seldom is any detailed specification made prior to customization, setting interface levels, data availability and requirements of interfacing applications, and (of vital importance) the naming conventions and element definitions being employed.

Typical levels of interface are given in Table 2.9 as examples on which detailed designs can be based.

As the GIS delivers less and less data, the missing data have to be added by the data engineering application of the SCADA/DMS. In cases where load and customer data are not stored in the GIS database as network attribute data this has to be imported or obtained from a different source such as CIS using a batch transaction base interface.* The above discussion is highly simplified but serves

TABLE 2.9
Typical GIS/SCADA/DMS Interface Levels Summarizing Data Provided by Each Application, and Data Transfer to and from Each Application

Level	Description	Master	Data Added with SCADA Data Eng Tool	GIS/SCADA/DMS	SCADA/DMS/GIS
1	GIS database is enhanced to add all required SCADA data as attributes to the asset data including RTU data All operating diagram displays are implemented and maintained in the GIS	GIS	None	SCADA point data Picture data Network parameter data Connectivity	Optional Device status changes Selected measurands
2	GIS database of network attribute data and graphic displays maintained, including attribute data required for SCADA operation of the network	GIS for all network model data and displays	All point data, RTU information, linking of point data, and network model data and picture linking	Picture data Network model data, including parameter data Connectivity	Optional Device status changes Selected measurands
3	GIS database of connectivity and GIS-native[a] network attribute data	GIS for connectivity and GIS native network parameter data SCADA for remainder	All point data, RTU information, complementing network model data for SCADA operation, operating diagrams, and picture linking	Network data Connectivity and GIS-native parameter data	Optional Device status changes Selected measurands
4	GIS database of native network parameter data	GIS database of network attribute data SCADA for remainder	All data for operations with exception of GIS-native parameter data	GIS-native network parameter data	Optional Device status changes Selected measurands
5	GIS without network parameter or connectivity data or no GIS implementation	SCADA	All data from diverse sources	None	None

[a] GIS-native data: Data that has been entered into the GIS solely for the need of GIS-resident applications and without reference to the requirements of the SCADA/DMS.

TABLE 2.10
Responsibilities of Each IEC Working Group

IEC TC 57 Working Group	Topic	EPRI UCA2	EPRI CCAPI
WG 3,10,11,12	Substations	✓	
WG 7	Control centers	✓	
WG 9	Distribution feeders	✓	
WG 13	Energy management systems		✓
WG 14	Distribution management systems		✓

to illustrate that not only must the roles of each application in terms of data maintenance responsibility by type of data be made available, but the data model must also be defined at the outset of implementation of the two functions if complex or native interfaces are to be avoided.

2.12.4 Data Model Standards (CIM)

The industry is, through IEC Technical Committee (TC) 57, developing standard data models and business structures, starting with transmission systems that will be extended to cover distribution networks. IEC 61970-301 in Working Groups (WG) 13 (EMS) and 14 (DMS) are developing the common information model (CIM).* The principal task of the overall standard is to develop a set of guidelines, or specifications, to enable the creation of plug-in applications in the control center environment, thus avoiding the need to customize every interface between different applications from different suppliers. There are a number of WGs that are either directly or indirectly associated with the development of this standard and EPRI† is also contributing through two major projects (Table 2.10).

Although at present, this part of the standard, IEC 61970-301, defines a CIM that provides a comprehensive logical view of energy management system (EMS) information, the standard is a basic object-oriented model extendable for distribution networks. The CIM is an abstract model that represents all the major objects in an electric utility enterprise typically contained in an EMS information model. This model includes public classes and attributes for these objects, as well as the relationships between them. The CIM is part of the overall EMS-API‡ framework. The purpose of the EMS-API standard is to facilitate the integration of EMS applications developed independently, between entire EMS systems developed by different vendors, or between an EMS system and other systems concerned with different aspects of power system operations, such as generation or distribution management. This is accomplished by defining standard application program interfaces to enable these applications or systems to

access public data and exchange information independent of how such information is represented internally. The CIM specifies the semantics for this API. Other parts of this standard specify the syntax for the API.

The objects represented in the CIM are abstract in nature and may be used in a wide variety of applications. As stated earlier and of importance to the content of this book, the use of the CIM goes far beyond its application in an EMS. This standard should be understood as a tool to enable integration in any domain where a common power system model is needed to facilitate interoperability and plug compatibility between applications and systems independent of any particular implementation. It provides the opportunity of common language between different data structures of different applications, wherein each data structure has been optimized for the performance of that application.

CIM Model Structure. The CIM is defined using object-oriented modeling techniques. Specifically, the CIM specification uses the Unified Modeling Language (UML)* notation, which defines the CIM as a group of packages. Each package in the CIM contains one or more class diagrams showing graphically all the classes in that package and their relationships. Each class is then defined in text in terms of its attributes and relationships to other classes.

The CIM is partitioned into a set of packages. A package is just a general-purpose grouping mechanism for organizing the model. Taken as a whole, these packages comprise the entire CIM.

The CIM is partitioned into the following packages for convenience:

Wires. This package provides models that represent physical equipment and the definition of how they are connected to each other. It includes information for transmission, subtransmission, substation, and distribution feeder equipment. This information is used by network status, state estimation, power flow, contingency analysis, and optimal power flow applications. It is also used for protective relaying.

SCADA. This package provides models used by supervisory control and data acquisition applications. Supervisory control supports operator control of equipment, such as opening or closing a breaker. Data acquisition gathers telemetered data from various sources. This package also supports alarm presentation.

Load Model. This package provides models for the energy consumers and the system load as curves and associated curve data. Special circumstances that may affect the load, such as seasons and data types, are also included here. This information is used by load forecasting and load management packages.

Energy Scheduling. This package provides models for schedules and accounting transactions dealing with the exchange of electric power between companies. It includes megawatts that are generated, consumed, lost, passed through, sold, and purchased. It includes information for transaction scheduling for energy, generation capacity, transmission, and ancillary services. It also provides information needed for OASIS† transactions.

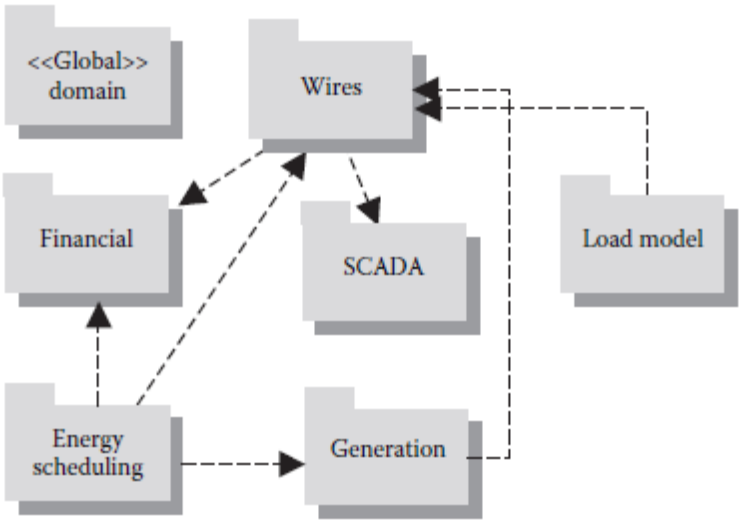

FIGURE 2.26 CIM package relationships diagram.

This information is used by accounting and billing for energy, generation capacity, transmission, and ancillary services applications.

Generation. The generation package is divided into two subpackages: production and operator training simulator (OTS).

Financial. This package provides models for settlement and billing. These classes represent the legal entities who participate in formal or informal agreements.

Domain. This package provides the definitions of primitive datatypes, including units of measure and permissible values, used by all CIM packages and classes. Each datatype contains a value attribute and an optional unit of measure, which is specified as a static variable initialized to the textual description of the unit of measure. Permissible values for enumerations are listed in the documentation for the attribute.

Figure 2.26 shows the packages defined above for the CIM and their dependency relationships. A dashed line indicates a dependency relationship, with the arrowhead pointing from the dependent package to the package on which it has a dependency.

CIM Classes and Relationships. Within each CIM package are classes and objects and their relationships. These relationships are shown in CIM class diagrams. Where relationships exist between classes in other packages, those classes are also shown identifying the ownership package.

A class is a description of an object found in the real world, such as a transformer, switch, or load that needs to be represented as part of the overall power system model. Classes have attributes, each attribute having a type (integer, floating point, boolean, etc.), which describes the characteristics of the objects. Each class in the CIM contains the attributes that describe and identify a specific instance of the class. CIM classes are related in a variety of ways given below, which describe the structure and type of relationship.

Generalization. A generalization is a relationship between a general and a more specific class. The more specific class can contain only additional information. For example, a transformer is a specific type of power system resource. Generalization provides for the specific class to inherit attributes and relationships from all the more general classes above it. In the schemas, the relationship is depicted as an arrow pointing from the subclass to the general class.

Simple Association. An association is a connection between classes that can be assigned a role. For example, there is a Has A association between a transformer and a transformer winding. In the schemas, this is shown as an open diamond pointing to the higher class.

Aggregation. Aggregation is a special case of association. Aggregation indicates that the relationship between the classes is some sort of whole-part relationship, where the whole class "consists of" or "contains" the part class, and the part class is "part of" the whole class. The part class does not inherit from the whole class as in generalization. Two types of aggregation exist, composite and shared. The Consists Of, Part Of labels are used in the schemas.

Composite Aggregation: Composite aggregation is used to model whole-part relationships where the multiplicity of the composite is 1 (i.e., a part belongs to one and only one whole). A composite aggregation owns its parts (e.g., a topological node could be a member of a topological island).

Shared Aggregation: Shared aggregation is used to model whole-part relationships where the multiplicity of the composite was greater than 1 (i.e., a part may be a part in many wholes). A shared aggregation is one in which the parts may be shared with several aggregations, such as a telemetry class may be a member of any of a number of alarm groups. The Member Of label is used in the schemas.

In the schemas showing the association and aggregation relationships, the possible extent of the relationship is given as one of the following:

- (0..*) from none to many
- (0..1) zero or one
- (1..1) only one
- (1..*) one or more

These rules are shown diagrammatically in Figure 2.27, illustrating some of the relationships in the wires and SCADA packages.

CIM Specification. Each CIM class is specified in detail by attributes, types, and relationships. Building on the nomenclature in the above section, an example is given introducing not only the connectivity attribute but also the cross package relationship that a wires package class would have with the SCADA class. Connectivity is modeled by defining a terminal class that provides zero or more (0..*) external connections for conducting equipment. Each terminal is attached to zero or one connectivity nodes, which in turn may be a member of a topological node (bus). Substations that are considered subclasses of a power system resource must have one or more connectivity nodes. The Connected To association

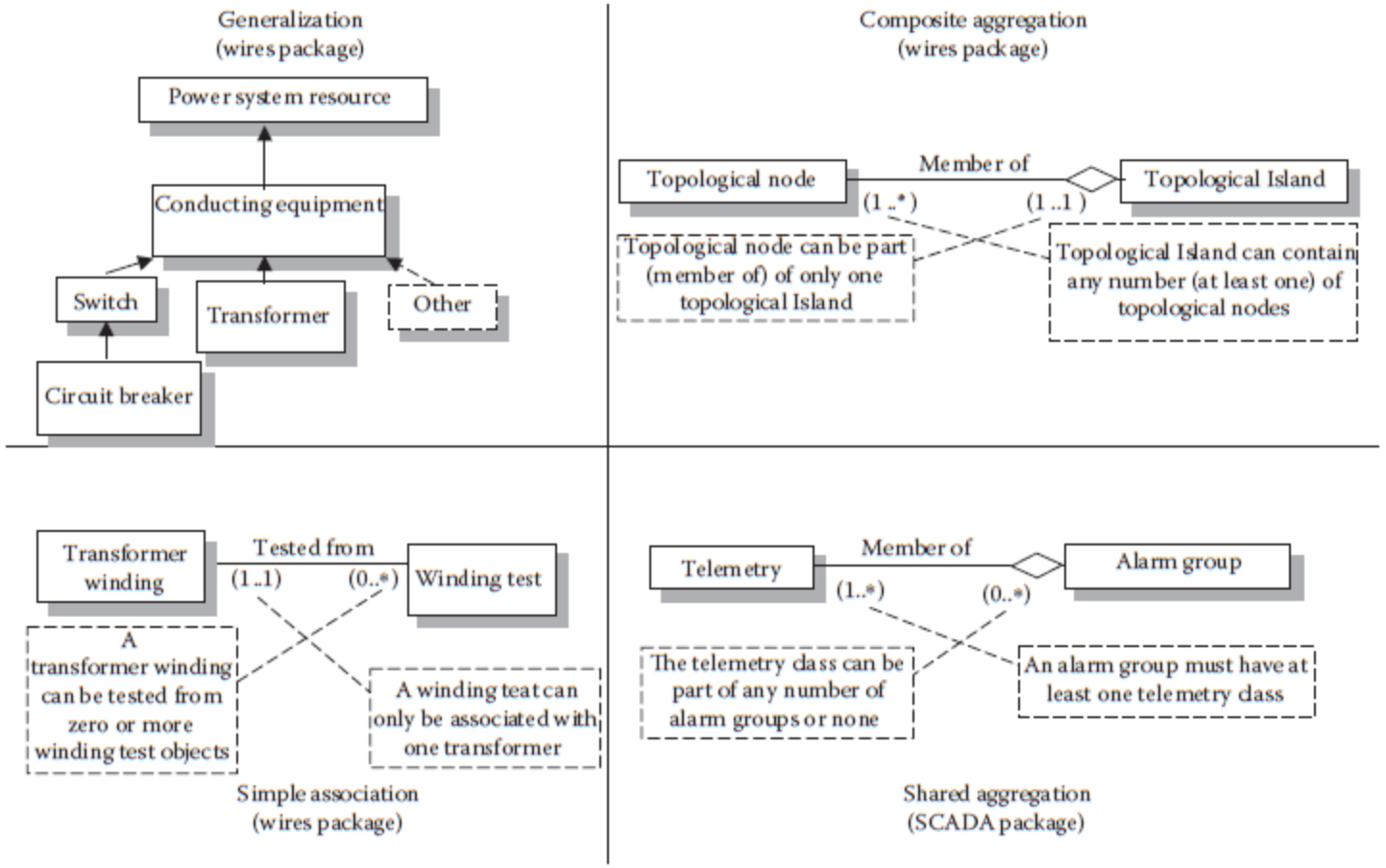

FIGURE 2.27 Schema representation of CIM class relationships.

uniquely identifies the equipment objects at each end of the connection. The relationship to the SCADA package is established through the terminal association with a measurement that can be zero or many. The complete schema of this subset within the wires package is shown in Figure 2.28.

Each object in the CIM model is fully defined by a standard set of attributes and relationships either unique (native) to the class or derived from the whole or superior class. An example is shown for a breaker class as follows:

Breaker attributes
- Native attributes
  - Fault rating (amps)
  - Breaker type (oil, SF6, vacuum, etc.)
  - Transit time (sec) from open to close
- Inherited attributes from:
  - Conducting equipment class
    - Number of terminals
  - Power system resource
    - Name of power system resource
    - Descriptive information
    - Manufacturer
    - Serial number
    - Location: X,Y coordinate or grid reference
    - Specification number if applicable
  - Switch
    - Modeling flag designation of real or virtual device for modeling purposes
    - State open or closed
    - Switch on count number of operations since last counter reset

Breaker associations

Native roles

(0..*) Operated by (0..*) IED breakers can be operated by protective relays, RTUs etc.

(1..1) Has a (0..*) reclose sequence

Roles inherited from:

Conducting equipment

(0..1) External connection for (0..*) terminal

(0..*) Protected by (0..*) protection relay

(1..1) Has a (0..*) clearance tag

Power system resource

(0..1) Measured by (0..*) measurement

(1..1) Has a (0..1) outage schedule

(0..*) Member of role A (0..*) power system resource

(0..*) Member of role B (0..*) power system resource

(0..*) Member of company (0..*) company PSR may be part of one or more companies

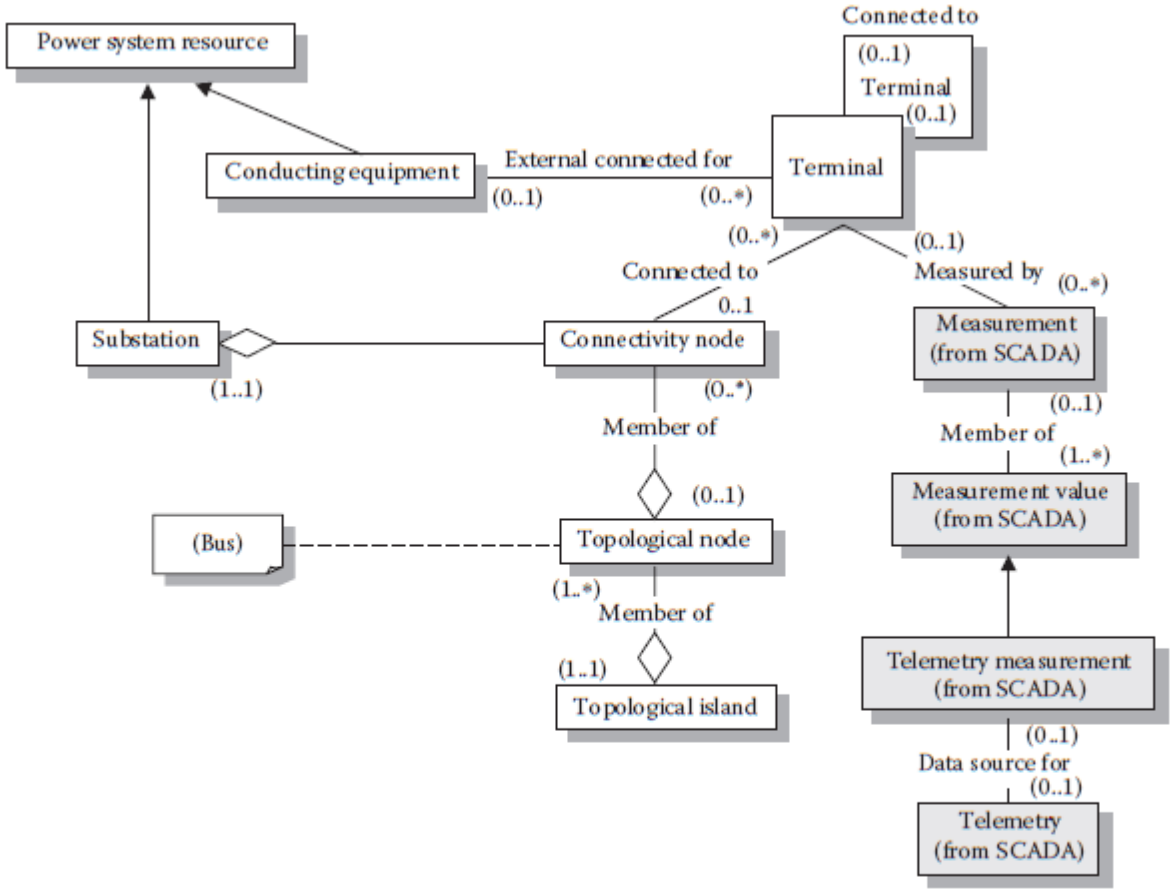

FIGURE 2.28 Class and object relationship schema for a portion of the CIM Wires Package showing treatment of connectivity and association with SCADA Package.

(0..*) Operated by (0..1) company PSR may be operated by one company at a time

Switch

(0..*) Has a (0..*) switching schedule A switch may have a switching schedule

A typical CIM model structure for the majority of wire package classes is shown diagrammatically in Appendix 2A at the end of this chapter. This sample is for illustration purposes only and should not be taken as a comprehensive CIM model for distribution. The reader interested in the details of the entire standard is recommended to study the technical committee and working group publications, because any further detail is outside the objectives of this book.

2.12.5 Data Interface Standards

Development of standards to achieve both vertical and horizontal integration in a plug-and-play manner for DMSs is another of the goals of WG 14. The WG has defined the business activity functions within a distribution utility for which enterprise application integration (EAI) is required. These business segments or departments, though, are supported by more than one IT application as mapped in Table 2.11 below. The interface architecture will form the part of the eventual IEC standard that will rely on the definition of an interface reference model (IRM) and messaging middleware accommodating this business segmentation, where wrappers or common interfaces attach each application to the message bus.

The IEC work has defined the above business activity segments in more detail in its publications and reports.

2 MARKS QUESTION AND ANSWERS

1. What is meant by Distribution SCADA?

   SCADA generally refers to an industrial computer system that monitors and controls a process. In the case of the transmission and **distribution** elements of electrical utilities, **SCADA** will monitor substations, transformers and other electrical assets.

2. What are the general requirements for selecting an automation system while designing a new substation.
   - The system should be adaptable to any vendor's hardware.
   - It should incorporate distributed architecture to minimize wiring.
   - It should be flexible and easily set up by the user.
   - The substation unit should include a computer to store data and pre-process information.

3. Write the functions of SCADA
   Data acquisition
   Supervisory control
   Tagging
   Alarms
   Logging (recording)
   Load shading
   Trending

4. What are the requirements of distribution system automation?
   Real-time trending and phasor plots of electrical parameters such as current and voltage were expected to be part of the basic offering of the DA application package. It was also felt necessary for the application software to archive the acquired data (such as switch-operation data) in a format that other applications, such as geographical information system (GIS), would be able to use for study and analysis (*e.g.*, trouble call analysis function). Data archiving and historical reporting features were important considerations in choosing a vendor. From a system configuration perspective, the intention was to implement intelligent processing at the distribution pole level. An overburdened SCADA system is an evidence for erratic front-end processor (FEP) operations, maximum CPU utilization, and the field I/O capabilities being stretched to their limits. The intelligent controllers to be used for distributed processing were expected to relieve the SCADA host processor of the extra burden of DA monitoring and control. It was also specified at the very beginning that the monitoring and control equipment installed in a substation local area network (LAN) environment and communicating with the SCADA host processor, would have to adhere to industry-standard communication protocols. The hardware interface and the communication protocol must be able to interface with other vendors' intelligent electronic programmable controllers (IEPCs) and intelligent electronic devices (IEDs), such as logic controllers, smart meters, relays, etc.

5.

What are the advantages of distribution automation?

Benefits of Implementing SCADA systems for Electrical Distribution:

• Increases reliability through automation • Eliminates the need for manual data collection • Alarms and system-wide monitoring enable operators to quickly spot and address problems • Automation protects workers by enabling problem areas to be detected and addressed automatically • Operators can use powerful trending capabilities to detect future problems, provide better routine maintenance of equipment and spot areas for improvement • Historians provides the ability to view data in various ways to improve efficiency.

6.

What are the components of SCADA.

- Supervisory computers
- Remote terminal units
- Programmable logic controllers
- Communication infrastructure
- Human-machine interface

10 MARKS QUESTIONS

1. **Explain Distribution Automation and advantages & disadvantages with neat diagram**
2. **Explain Distribution management systems with neat diagram**
3. **Explain Distribution Automation system functions**
4. **Explain SCADA system with neat diagrams & and List the advantages & disadvantages ?**
5. **Explain Outage Management with neat diagrams**
6. **Explain decision support applications**
7. **Explain Substation Automation with neat diagram**
8. **Explain Controller Feeder Automation with neat diagram**
9. **Explain database Structures and interfaces with neat diagrams**