Course: **Power Quality**

Course Code**: 23A027HT**

Branch: **Electrical & Electronics Engineering**

Prepared by: **G.M. SUBAHAN**

Designation: **Assistant Professor**

Department**: EEE**

Title of the Course: **POWER QUALITY**

Category : PEC

Course Code : 23A027HT

Year : IV

Semester : I

Branch : **EEE**

Lecture Hours	Tutorial Hours	Practice Hours	Credits
3	0	0	3

Course Objectives:

- Power quality terminology, power quality issues, classification
- Different sources of power quality disturbances.
- Harmonic distortion; Principles for controlling harmonics
- Power quality measuring equipment; Power quality monitoring standards
- Impact of distributed generation on power quality

Unit 1 Introduction to Power Quality 08

Power Quality- definition, terminology, issues, evaluation procedure, responsibilities of the suppliers and users of electric power, power quality standards, and CBEMA and ITI curves.

Learning Outcomes: At the end of the unit, the student will be able to:

- Analyze various power quality issues(L4)
- Explain the power quality performance curves(L2)

Unit 2 Power Quality Disturbances 10

General classes of power quality problems- Impulsive and oscillatory transients. Long duration voltage variations - over voltage, under voltage, sustained interruption. Short duration voltage variations-interruption, sag, swell and outage. Sources of sags and interruptions, estimating voltage sag performance overview of mitigation methods.

Learning Outcomes: At the end of the unit, the student will be able to:

- Analyze various power quality disturbances(L4)
- Analyze the sources of sags and interruptions (L4).

Unit 3 Fundamentals of Harmonics 10

Harmonic distortion, voltage versus current distortion, harmonics versus transients, power system quantities under non-sinusoidal conditions, harmonic indices. Harmonic sources from commercial and industrial loads. Effects of harmonic distortion. Applied harmonics - harmonic distortion evaluation, principles of controlling harmonics, and devices for controlling harmonic distortion. Harmonic filter design and standards on harmonics.

Learning Outcomes: At the end of the unit, the student will be able to:

- Explain the harmonic distortion and harmonic indices(L2)
- Explain the principle of controlling harmonics and devices for controlling harmonic distortion (L2)

Unit 4 Power Quality Monitoring 9

Power quality benchmarking, monitoring considerations, choosing monitoring locations, permanent power quality monitoring equipment, historical perspective of power quality measuring instruments. Power quality measurement equipment-types of instruments, assessment of power quality measurement data, power quality monitoring standards.

Learning Outcomes: At the end of the unit, the student will be able to:

- Explain about the power quality benchmarking (L2)
- Explain the various types of power quality measurement equipment (L2)
- Describe power quality monitoring standards (L2)

Unit 5 Distributed Generation and Grid Interconnection 10

Distributed generation -connection requirements and impacts on the network. Interaction and optimal location of DG-Eigen analysis and voltage interaction. Power quality in DG-Mitigation of voltage dip during motor start, harmonic effects with DG, voltage flicker and fluctuation. Islanding issues, distribution line compensation-heavy Load and Light load condition, real generation, protection issues for distributed generation, technologies for distributed generation, power quality impact from different DG types.

Learning Outcomes: At the end of the unit, the student will be able to:

- Describe interaction and optimal location of distributed generation (L2)
- Explain the power quality impact from different distributed generation types (L2)

Prescribed Text Books:

1. Roger C. Dugan, Mark F. Mc Granaghan, Surya Santoso, H. Wayne Beaty, Electrical Power Systems Quality, 3rd edition, TMH Education Pvt. Ltd., 2012.
2. Arindam Ghosh, Gerard Ledwich, Power quality enhancement using custom power devices, Kluwer academic publishers, 2002.

References Books:

1. G.T. Heydt, Electric Power Quality, Stars in a circle Publications, 2nd edition 1991. USA.
2. Surajit Chattopadhyaya, Madhuchhanda Mitra, Samarjit Senugupta, Electrical Power Quality, Springer Dordrecht Heidelberg London New York.2011.
3. Math H. J. Bollen, Understanding Power quality problems, IEEE Press, 2007.

Course Outcomes:

At the end of the course, the student will be able to Blooms Level of Learning

1. Demonstrate knowledge on sources of power quality disturbances and issues, power quality monitoring and measuring instruments, power quality standards, effect of distributed generation on power quality. L1
2. Analyze various power quality issues. L3
3. Design a suitable harmonic filter for commercial and industrial loads. L4
4. Investigate various power quality issues and provide feasible solutions for improvement of power quality. L5
5. Select and use an appropriate equipment for monitoring and measurement of power quality. L4

Web Resources:

1. https://nptel.ac.in/courses/108/107/108107157/
2. https://nptel.ac.in/courses/108/106/108106025/

CO-PO Mapping:

Course Outcomes	Engineering Knowledge	Problem Analysis	Design/Development of solutions	Conduct investigations of complex problems	Engineering tool usage	The engineer and the world	Ethics	Individual and collaborative team work	Communication	Project management and finance	Life-long learning	PSO1	PSO2
23A027HT.1	2	-	-	-	-	-	-	-	-	-	-	2	-
23A027HT.2	3	3	-	-	-	-	-	-	-	-	-	3	-
23A027HT.3	3	3	3	-	-	-	-	-	-	-	-	3	-
23A027HT.4	2	2	-	-	2	-	-	-	-	-	-	-	2
23A027HT.5	3	3	-	-	3	-	-	-	-	-	-	-	3

NOTE: Contents and Images of this material referred from

1. Roger C. Dugan, Mark F. Mc Granaghan, Surya Santoso, H. Wayne Beaty, Electrical Power Systems Quality, 3rd edition, TMH Education Pvt. Ltd., 2012.

2. Power Quality Enhancement using Custom Power Devices by Arindam Ghosh and Gerard Ledwich

Department of Electrical & Electronics Engineering

IV B.Tech I Semester

POWER QUALITY (23A027HT)

(Electrical and Electronics Engineering)

Unit-I (Introduction to Power Quality)

Syllabus:

Power Quality- definition, terminology, issues, evaluation procedure, responsibilities of the suppliers and users of electric power, power quality standards, and CBEMA and ITI curves.

Definition of Power Quality:

Power quality refers to the characteristics of electrical power supply that ensure proper and reliable operation of electrical equipment. The PQ depends on the characteristics of the voltage and current waveforms, such as their magnitude, frequency, and waveform shape, and how well these parameters align with the requirements of the connected loads.

(or)

Power quality is the ability of the electrical network/grid to supply a clean and stable power supply. The PQ depends on the characteristics of the voltage and current waveforms, such as their magnitude, frequency, and waveform shape, and how well these parameters align with the requirements of the connected loads.

(or)

According to IEEE standards, power quality refers to the concept of providing electrical power to sensitive equipment in a way that is compatible with its operation. The PQ depends on the characteristics of the voltage and current waveforms, such as their magnitude, frequency, and

waveform shape, and how well these parameters align with the requirements of the connected loads.

The main key points of the power quality are:

Voltage: Maintaining a stable voltage level within acceptable limits. Avoid the sags and swells.

Current: Ensuring current flow is stable and free from distortions like harmonics, which can be introduced by non-linear loads.

Frequency: Maintaining a stable frequency, typically 50/60 Hz, as fluctuations can affect the operation of certain equipment.

Continuity of supply: Avoiding interruptions or outages, which can be crucial for critical equipment and processes.

Waveform purity: Maintaining a smooth sinusoidal waveform, rather than a distorted one, to prevent issues with sensitive electronics.

Disadvantages (or) Impacts of low Power Quality:

Power quality is the ability of the electrical network/grid to supply a clean and stable power supply. A poor power quality can leads to the following consequences:

(i) Equipment Malfunction: Electronic devices, motors, and other equipment can malfunction or be damaged.

(ii) Reduced Efficiency: Poor power quality can lead to increased energy consumption and increased energy losses.

(iii) Reduced lifespan: A poor power quality can accelerate the aging of equipment, requiring more frequent replacements.

(iv) Safety Hazards: Power quality issues can create safety hazards, particularly in industrial settings.

(v) Overheating: Poor power quality can lead to overheating of motors, transformers, and other electrical equipment, shortening their lifespan and potentially causing permanent damage.

(vi) Data Loss and Corruption: Voltage sags and interruptions can cause data loss in computers and other digital devices.

(vii) Inconvenience Tripping: Protective devices like relays and circuit breakers may trip unnecessarily due to poor power quality, causing disruptions in operations.

(viii) Increased Energy Consumption: Poor power factor and other power quality problems can lead to increased energy consumption and higher energy bills.

(ix) Increased Costs: Poor power quality leads to increased costs associated with equipment repairs, replacements, downtime, and energy consumption.

POWER QUALITY TERMS OR TERMINOLOGY:

Power Quality: It is any deviation of the voltage or current waveform from its normal sinusoidal wave shape.

Voltage quality: Deviations of the voltage from a sinusoidal waveform.

Current quality: Deviations of the current from a sinusoidal waveform.

Frequency Deviation: An increase or decrease in the power frequency.

Impulsive transient: A sudden, non-power frequency change in the steady state condition of voltage or current that is unidirectional in polarity.

Oscillatory transients: A sudden, non-power frequency change in the steady state condition of voltage or current that is bidirectional in polarity.

DC Offset: The presence of a DC voltage or current in an AC power system.

Noises: An unwanted electric signal in the power system.

Long duration Variation: A variation of the RMS value of the voltage from nominal voltage for a time greater than 1 min.

Short Duration Variation: A variation of the RMS value of the voltage from nominal voltage for a time less than 1 min.

Sag: A decrease in RMS value of voltage or current for durations of 0.5 cycles to 1 min.

Swell: A Temporary increase in RMS value of voltage or current for durations of 0.5 cycles to 1 min.

Under voltage: 10% below the nominal voltage for a period of time greater than 1 min.

Over voltage: 10% above the nominal voltage for a period of time greater than 1 min.

Voltage fluctuation: A cyclical variation of the voltage that results in flicker of lightning.

Voltage imbalance: Three phase voltages differ in amplitude.

Harmonic: It is a sinusoidal component of a periodic wave or quantity having a frequency that is an integral multiple of the fundamental power frequency.

Distortion: Any deviation from the normal sine wave for an AC quantity.

Total Harmonic Distortion: The ratio of the root mean square of the harmonic content to the RMS value of the fundamental quantity.

Interruption: The complete loss of voltage on one or more phase conductors for a time greater than 1 min.

CBEMA curve: A set of curves representing the withstand capabilities of computers in terms of the magnitude and duration of the voltage disturbance. Developed by the Computer Business Equipment Manufacturers Association (CBEMA). CBEMA has been replaced by the Information Technology Industry Council (ITI), and a new curve has been developed that is commonly referred to as the ITI curve. See *ITI curve.*

ITI curve: A set of curves published by the Information Technology Industry Council (ITI) representing the withstand capabilities of computers connected to 120-V power systems in terms of the magnitude and duration of the voltage disturbance.10 The ITI curve replaces the curves originally developed by the ITI's predecessor organization, the Computer Business Equipment Manufacturers Association (CBEMA).

POWER QUALITY ISSUES:

The main causes for power quality issues are (i) Faults, switching operations, and load changes at grid side, (ii) Non-linear loads like variable frequency drives and power supplies at consumer side, (iii) Due to external factors like lightning strikes, switching of large inductive loads, and even weather conditions. A poor power quality can leads to the equipment malfunction, reduced lifespan, increased energy losses, and potential safety hazards. The power quality issues may classify on the basis of events and steady state quality as follows:

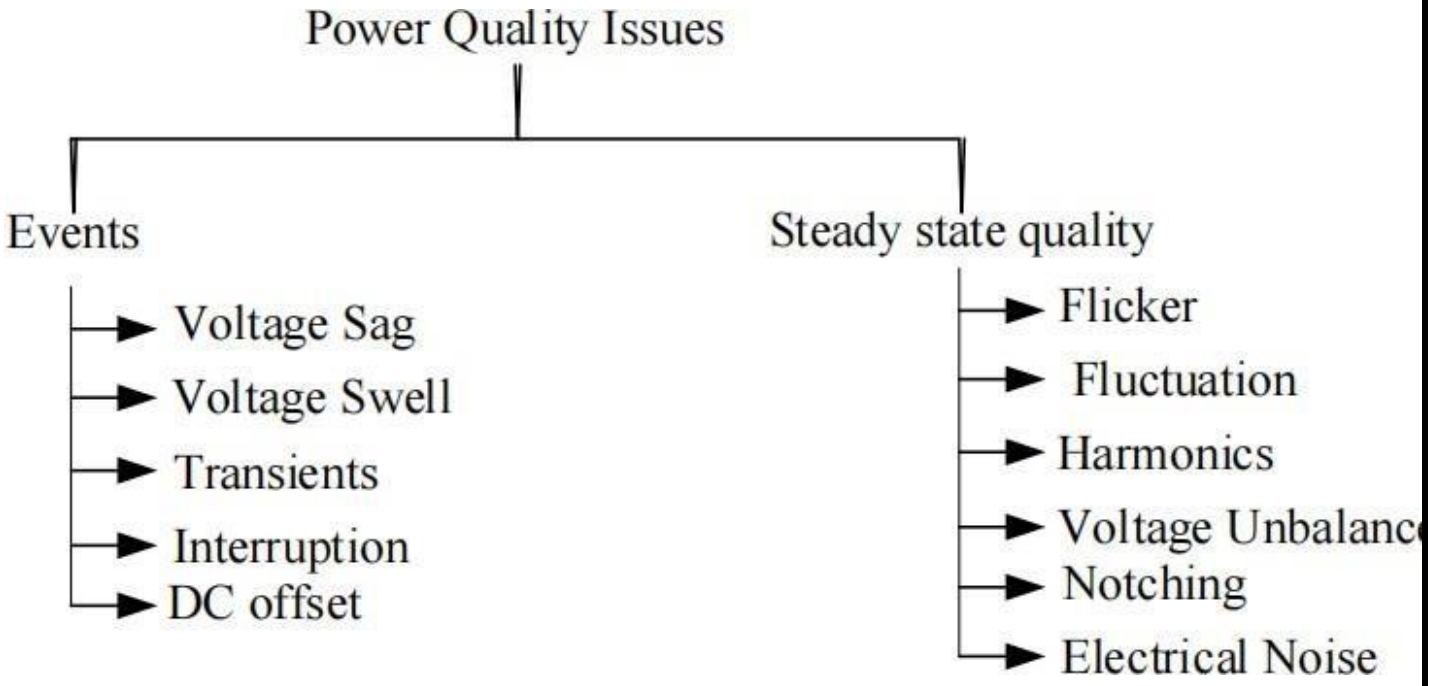

Voltage Sag/Dip: A voltage sag is a decrease in the voltage below a predefined threshold (typically 90% of nominal voltage) for a short duration. The Sags are caused by events like large motor starting, faults on the power line, or other disturbances on the electrical system. Sags can last from 0.5 cycles to 1 minute.

Voltage Swell: A voltage swell is an increase in the voltage above a predefined threshold (typically 110% of nominal voltage) for a short duration. Swells can be caused by the sudden disconnection of a large load or faults on the power system. Swells can also last from 0.5 cycles to 1 minute.

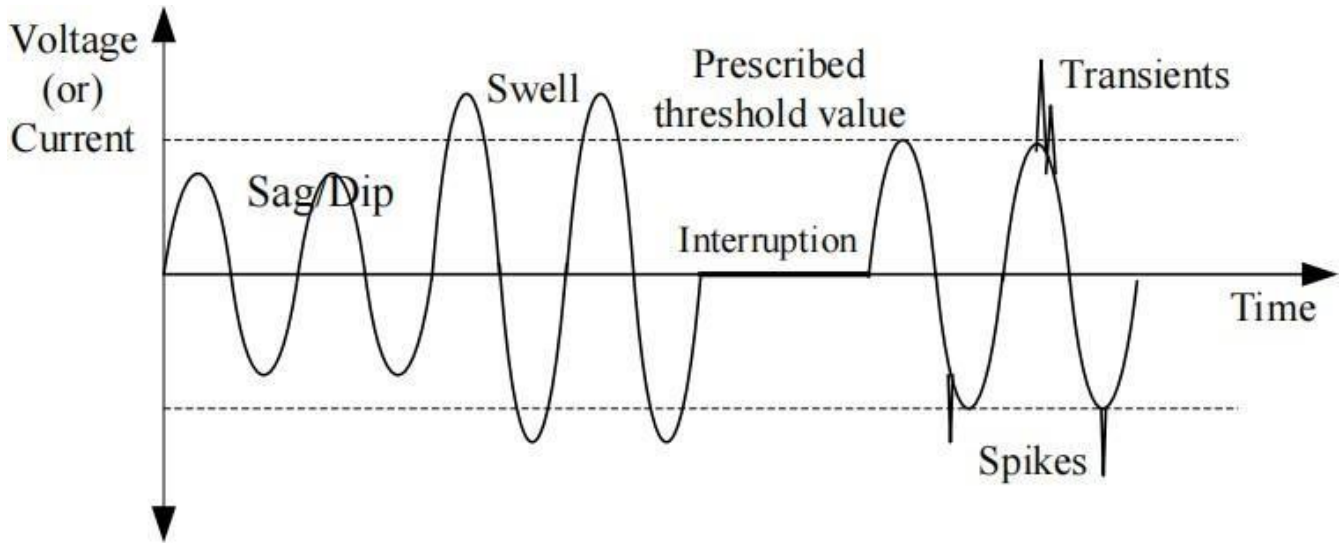

Transients: It is also known as voltage surge. It occurs for a short-duration with high-amplitude spike. These surges are temporary and can be caused by various events like lightning strikes, switching operations, or electrostatic discharge. Transients are harmful to electrical and electronic equipment, potentially causing damage or malfunction.

Interruptions: Interruption is the complete loss of power supply for a short-term or long-term. This leads to equipment shutdowns and production losses.

DC offset: DC offset in power quality refers to the presence of a direct current (DC) voltage or current in an alternating current (AC) power system. This unwanted DC component can cause various issues, including transformer core saturation, overheating, and erosion of grounding electrodes.

Flicker: Flicker refer to fluctuation in the brightness of lights caused by rapid changes in the supply voltage. These fluctuations occur due to varying electrical loads, fault and disturbances, soft starting.

Fluctuations: Fluctuations in power quality refer to unpredictable and rapid variations in the voltage or current of an electrical power supply. These fluctuations can be caused by various factors like changes in load/power demand, grid instability, equipment malfunctions, external factor etc.

Voltage unbalance: In a three-phase system, the unequal voltage level across different phases is called voltage unbalance. It may cause overheating and damage to motors.

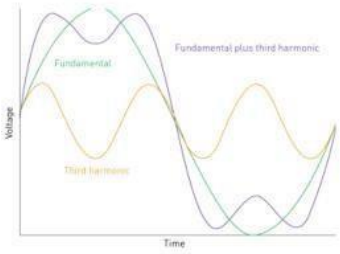

Harmonics

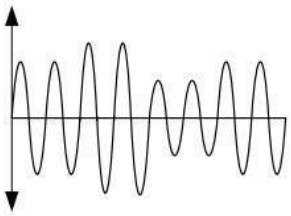
Fluctuations

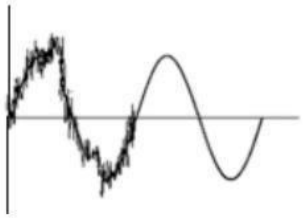
Noise

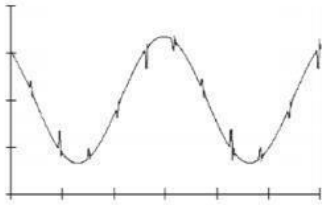
Notching

Harmonics: Harmonics refers to unwanted frequencies in the voltage or current waveform. These are caused by non-linear loads like power electronics. Harmonics lead to overheating of equipment, malfunctions, and reduced power quality.

Electrical Noise: Electrical noise in power quality refers to unwanted electrical signals that interfere with the normal operation of electrical and electronic equipment. The sources of

noise are (i) Internal sources like on/off of large electrical loads, nonlinear loads, defected device or poor wiring. (ii) External source like lightning strikes, Radio frequency interference, Electromagnetic interference.

Notching: Notching is a periodic voltage disturbance caused by the normal operation of power electronic devices. It occurs when current is commutated from one phase to another.

Symptoms of Power quality problems:

The main symptoms of the power quality problems are

- Blinking of lights.
- Sudden tripping of circuit breakers, Mal-operation of equipment.
- Poor performance and unexpected shutdowns.
- Capacitor bank failure.
- High ground current.
- Data loss in electronic circuits.

POWER QUALITY EVALUATION PROCEDURE:

Power quality problems include a wide range of different phenomena. Each of these phenomena may have a variety of different causes and different solutions are used which not only improve the power quality, but also improve the equipment performance.

Power quality problem evaluation procedure involves steps with the involvement of interaction between utility supply systems and customer facility.

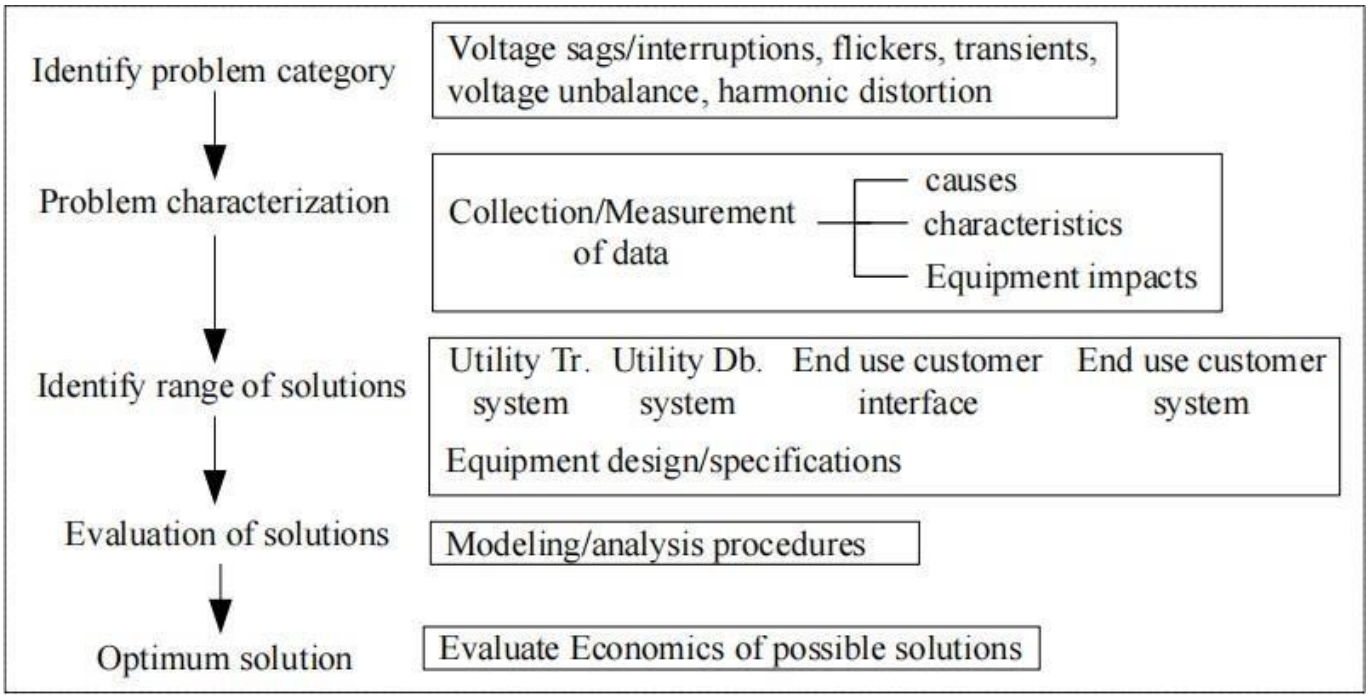

Figure1.1 Basic steps involved in Power Quality Evaluation

Measurement is the primary method for characterizing the problem as well as evaluating the existing system. It also includes the impact of power quality variations; at that time problem can be correlated with possible causes.

Evaluating solutions needs a system perspective and also considers the economic and technical limitations. Possible solutions are identified at all levels of system; it means from utility supply system to end-use equipment. If any solution is technically not possible, it is eliminated and the rest of the alternatives are compared on an economic basis.

The optimum solution will depend on the type of the problem, the number of end users being impacted and the possible solutions. Simulation and measurement for evaluating power quality problems is described separately for each type of power quality phenomenon.

Quality phenomenon.

After implementation of optimum solution, if any problem arises, the procedure considers whether it results from:

1. Existing power quality problem
2. New design (or) from proposed changes to the system

Basic steps involved in power quality problem evaluation are shown in Figure 1.1.

POWER QUALITY STANDARDS:

The power quality standards are the guidelines and limitations to ensure the reliable and efficient operation of electrical power systems. They cover various aspects of supply power such as voltage, frequency, wave shape and other disturbances. These standards help to mitigate issues like voltage sags, harmonics, and flicker. The power quality standards provide a framework for maintaining a stable and reliable electrical supply, ensuring the proper functioning of electrical equipment and minimizing disruptions to operations. Common PQ standards are

(i) International Electrotechnical Commission (IEC)

(ii) Institute of Electrical and Electronics Engineers (IEEE)

(iii) Semiconductor Equipment and Materials International (SEMI)

(iv) National Electrical Code (NEC)

(v) National Fire Protection Association (NFPA)

(vi) National Electrical Manufacturers Association (NEMA)

(vii) American National Standards Institute (ANSI)

***International Electrotechnical Commission (IEC)*:** It is an organization that prepares and publishes international standards for all electrical, electronic and related technologies. IEC

standards cover a vast range of technologies from power generation, transmission and distribution to home appliances. Examples are

(i) ***IEC 60350*****:** It specifies methods for measuring the performance of electric cooking systems like ovens, steam ovens, and grills for household use.

(ii) ***IEC 60352*** standards focused on solder less connections used in electrical and electronic equipment.

(iii) ***IEC 61439*** is an international standard for low-voltage switchgear and control gear assemblies. It provides a comprehensive framework for the design, construction, and verification of electrical panels, including power distribution boards and motor control centres.

Institute of Electrical and Electronics Engineers (IEEE) Standards**:** These standards ensure the functionality, safety, and interoperability of technologies across various industries, from telecommunications and power generation to healthcare and more. Examples are

(i) IEEE 141-1993 and IEEE 142-1991: These standards focus on grounding practices for industrial and commercial power systems, aiming to protect equipment from damage and ensure reliable operation.

(ii) IEEE 1100: This standard provides recommendations for grounding and power quality in electronic equipment.

(iii) IEEE 1547: This standard deals with the interconnection of distributed resources (like solar and wind power) with electric power systems, including requirements for power quality.

(iv) IEEE 1453: This standard focuses on voltage fluctuations and flicker in power systems, which can affect the performance of sensitive equipment.

(v) ***IEEE 1159:*** This standard provides recommended practices for monitoring electric power quality, covering various aspects like voltage variations, harmonics, and other disturbances.

(vi) ***IEEE 519:*** This standard is widely used for managing harmonic distortion in power systems.

National Electrical Code (NEC) standards is a regionally adoptable standard for the safe installation of electrical wiring and equipment. These are also known as National Fire Protection Association (NFPA) 70. The NEC aims to reduce the risk of electrical fires and shocks by providing guidelines for electrical system and equipment installation. Examples are

American National Standards Institute (ANSI) is a private, non-profit organization that coordinates the development and use of voluntary standards in the United States. This standard helps to ensure consistency, quality, and safety of the various industries. Examples are

(i) ANSI Z87.1**:** This standard specifies requirements for eye and face protection devices, ensuring they offer adequate protection against various hazards.

(ii) ANSI/ASHRAE/IES Standard 90.1**:** This standard provides minimum energy performance requirements for buildings.

(iii) ANSI/TIA standards: These standards cover telecommunications infrastructure, including cabling and equipment.

(iv) ANSI C84.1: ANSI C84.1 specifies the steady-state voltage tolerances expected on a power system. A voltage variation is considered to be long duration when the ANSI limits are exceeded for greater than 1 min.

Semiconductor Equipment and Materials International (SEMI):

SEMI F-47-1999: SEMI F-47 standard for definition and measurement of equipment reliability, availability and maintainability defines the sag ride through capability.

SEMI F-42-1999: SEMI F-47 standard is test method for semiconductor processing equipment voltage sag immunity.

National Electrical Manufacturers Association (NEMA):

NEMA MG1-1998(Motors and Generators): This standard gives technical specifications used by manufacturers, voltage and current unbalance tolerance, over and under voltage tolerance, electrical starting characteristics and insulation values or different objectives of Motors and Generators.

NEMA LS1-1992(Low voltage surge protection device): It is good standard for quality constraints of the Low voltage surge protection device.

RESPONSIBILITIES OF THE SUPPLIERS AND USERS OF ELECTRIC POWER:

Suppliers are generally responsible for delivering electricity within specified voltage and frequency parameters up to the point of delivery (usually the meter), while users are responsible for ensuring their equipment and systems don't negatively impact the quality of power delivered to them or other users on the grid.

Responsibilities of Electric Power Suppliers:

(i) Maintaining Voltage and Frequency:

Suppliers must deliver electricity within acceptable voltage and frequency ranges as defined by standards and regulations.

(ii) Limiting Harmonics:

Suppliers are responsible for managing the generation and propagation of harmonics in the power system to minimize their impact on other users.

(iii) Providing Reliable Service:

Suppliers are expected to provide a reliable supply of electricity with minimal interruptions and disturbances.

(iv) Monitoring Power Quality:

Utilities often monitor power quality at various points in the system, including customer facilities, to identify and address issues.

(v) Adhering to Standards:

Suppliers must comply with relevant power quality standards and regulations, such as IEEE 519- 2014 for harmonic limits.

Responsibilities of Electric Power Users:

***(i) Managing Load Characteristics*:**

Users should manage their electrical loads to minimize the creation of disturbances like harmonics or voltage fluctuations.

(ii) Selecting Compatible Equipment:

Users should choose equipment that is compatible with the expected power quality characteristics and that does not introduce significant disturbances.

(iii) Addressing Power Quality Issues:

Users are responsible for addressing power quality issues within their facilities that may be caused by their equipment or systems.

***(iv) Monitoring Power Quality*:**

Users may need to monitor power quality within their facilities, especially if they have sensitive equipment or are experiencing problems.

(v) Cooperating with Suppliers:

Users should cooperate with suppliers in identifying and resolving power quality issues that may affect the wider grid.

(vi) Complying with Standards:

Users may need to comply with specific standards, such as IEEE 519-2014, regarding their electrical installations.

CBEMA AND ITI CURVES:

The most frequently used power quality data represents Computer Business Equipment Manufacturers Association (CBEMA) curve.

A set of voltage disturbance curves in terms of magnitude and duration is developed, at which computers can withstand (or) tolerate without malfunctioning (or) experiencing damage, is called CBEMA curve. CBEMA curve evaluation adopted the modern high tolerance computers which is target the sensitive equipment in a power system and deploying the power quality variations data. For power quality monitoring, typically used CBEMA curve is shown in Figure 1.2.

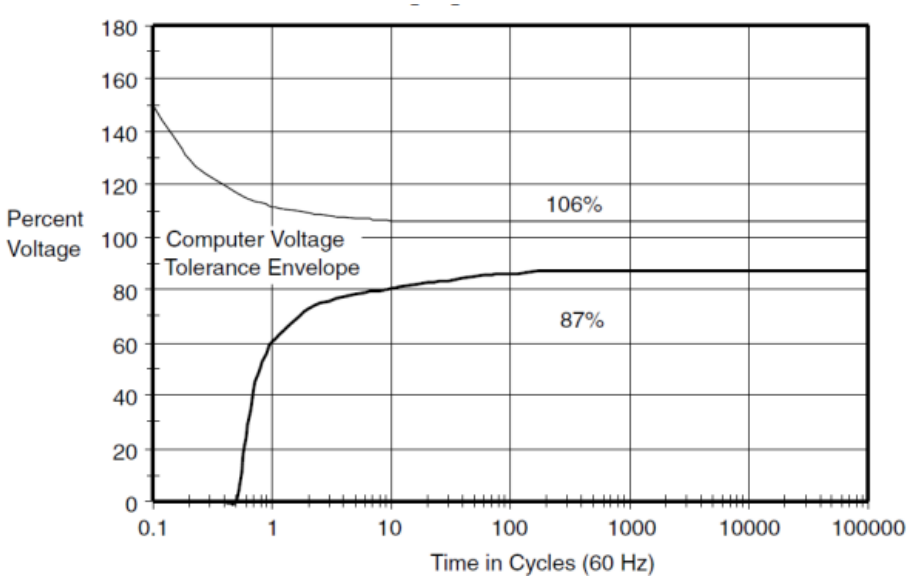

Figure 1.2 Commonly used CBEMA Curve

As shown in Figure 1.2, the points below envelope are due to load dropout due to lack of energy. The points above the envelope are due to malfunction such as insulation failure, overvoltage trip and over excitation. Upper curve down to 0.001 cycle having value 375% voltage due to limitations of the power quality monitoring instruments. The CBEMA curve is evaluated from 0.1 cycle and higher.

The CBEMA organization has been replaced by ITI. The set of voltage disturbance curves in terms of magnitude and duration that 120-V computer equipment tolerate without malfunctioning (or) experiencing damage developed by Information Technology Industry Council (ITI) is called ITI curve. The ITI curve is similar to CBEMA curve, i.e., it is applied to general power quality evaluation like CBEMA curve as shown in Figure 1.3.

The ITI curves indicate where IT equipment such as computers, servers, power distribution units, PLCs and telecommunication equipment is expected to operate properly within the middle portion of the curve, called the “no interruption” region. The lower acceptable region is the “prohibited region”.

Above that middle acceptance region is the “prohibited region” which involves the equipment tolerance for excessive Voltages, voltage spikes and Surges in this legion can cause damage to IT equipment.

The bottom of the curve is the "no damage legion" which represents the equipment tolerance for reduction in voltage i.e. Voltage sags and interceptions. In this region the equipment to stop working, but it should not cause damage to the Equipment. The ITI curve is used to know the withstand Capabilities of an IT equipments (or) loads to protect them from Power Quality issues such as Voltage Variations.

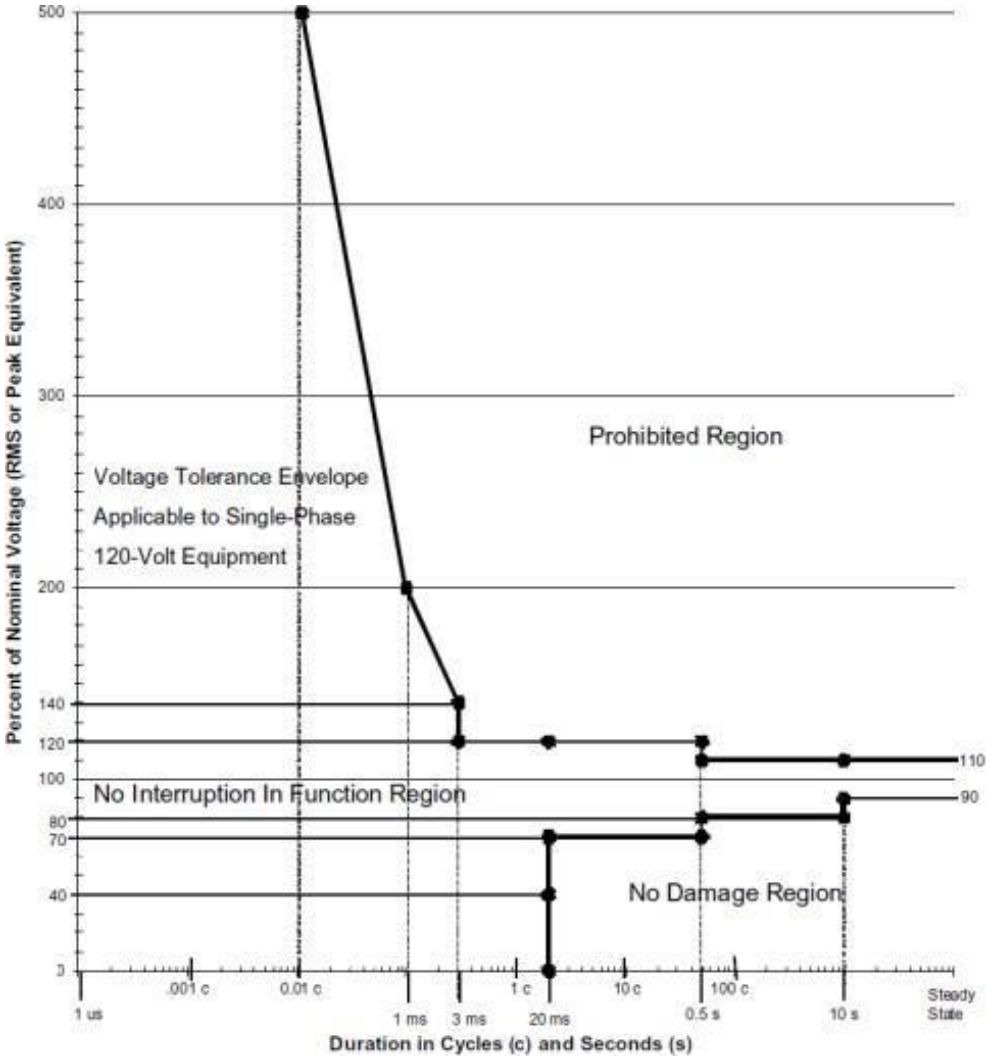

Figure 1.3 ITI curve for susceptibility of 120-V computer Equipment

Need of CBEMA and ITI curve:

Both curves are used

1. To determine the withstand Capability of Various loads & devices for Protection from power Quality Variations.

2: For display of a large Quantities of power Quality monitoring data.

3. To Design the Power supply for electronic equipment etc.

4. Developing standards for power distribution systems-

Department of Electrical & Electronics Engineering

IV B.Tech I Semester

POWER QUALITY (23A027HT)

(Electrical and Electronics Engineering)

Unit-II (Power Quality Disturbances)

Syllabus:

General classes of power quality problems- Impulsive and oscillatory transients. Long duration voltage variations - over voltage, under voltage, sustained interruption. Short duration voltage variations-interruption, sag, swell and outage. Sources of sags and interruptions, estimating voltage sag performance overview of mitigation methods.

General Classes of Power Quality Problems:

U.S. Power Industry and IEC together classify the following Power Quality Problems or Power Quality Disturbances or Power Quality Issues Power Quality Problems

1. Transients
   - Impulsive Transients
   - Oscillatory Transients
2. Long Duration Voltage Variations
   - Overvoltage
   - Under voltage
   - Sustained Interruptions
3. Short Duration Voltage Variations
   - Interruptions
   - Sags or Dips
   - Swells or Rise

4. Power Frequency Variations
5. Voltage Imbalance or Unbalance
6. Voltage Fluctuations or Flickers
7. Wave Form Distortion
   - DC offset
   - Harmonics
   - Interharmonics
   - Notching
   - Noise

1. Transients:

- Transients in a power system are momentary disturbances in voltage and current that occurs due to sudden changes in system conditions.
- These changes can be caused by events like switching operations, faults, lightning strikes, or load variations.
- Transients are characterized by their high magnitudes and short durations, often lasting only a few microseconds to milliseconds.
- Another word in common usage that is often considered synonymous with transient is surge.

Broadly speaking, transients can be classified into two categories, impulsive and oscillatory.

1. Impulsive Transient:

An impulsive transient is a sudden, non–power frequency change in the steady-state condition of voltage, current, or both that is unidirectional in polarity (primarily either positive or negative). The most common cause of impulsive transients is lightning. Impulsive transients

are normally characterized by their rise and decay times, which can also be revealed by their spectral content. For example, a 1.2 ×50-μs 2000-volt (V) impulsive transient nominally rises from zero to its peak value of 2000 V in 1.2 μs and then decays to half its peak value in 50 μs. The most common cause of impulsive transients is lightning. Below figure illustrates a typical current impulsive transient caused by lightning.

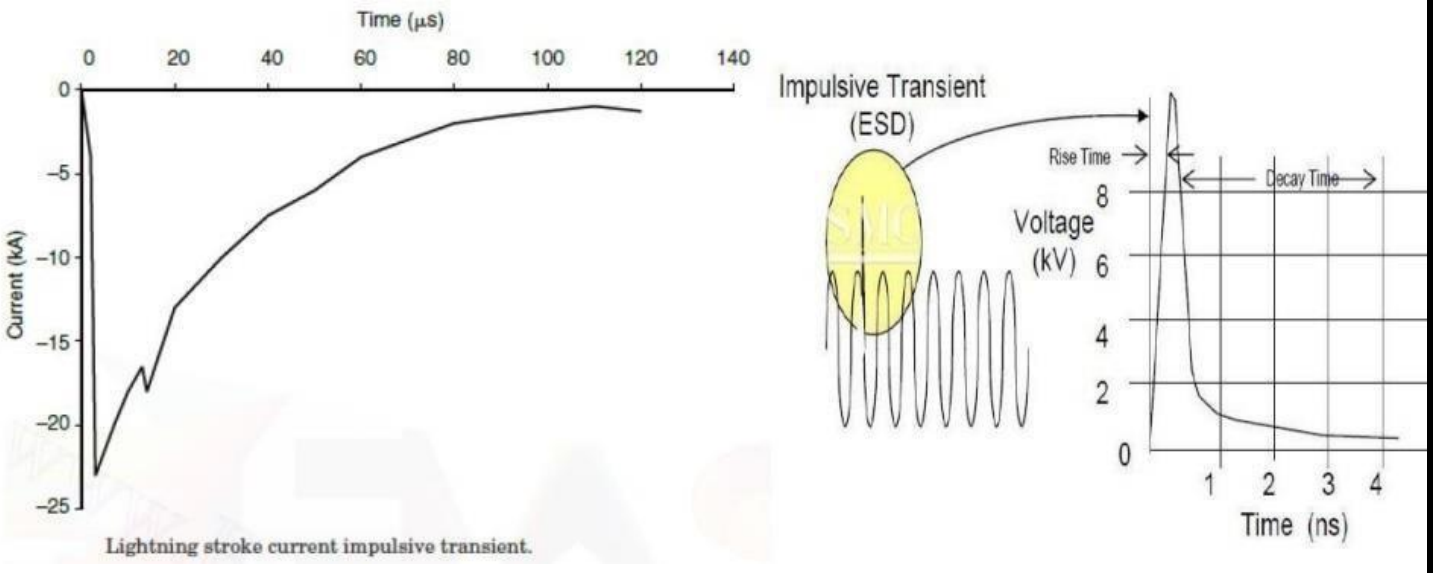

Lightning stroke current impulsive transient.

Because of the high frequencies involved, the shape of impulsive transients can be changed quickly by circuit components and may have significantly different characteristics when viewed from different parts of the power system. Impulsive transients can excite the natural frequency of power system circuits and produce oscillatory transients.

2. Oscillatory Transient:

An oscillatory transient is a sudden, non–power frequency change in the steady-state condition of voltage, current, or both, that includes both positive and negative polarity values. An oscillatory transient consists of a voltage or current whose instantaneous value changes polarity rapidly. It is described by its duration, and magnitude.

Oscillatory transients with a primary frequency component greater than 500 kHz and a typical duration measured in microseconds (or several cycles of the principal frequency) are considered high-frequency transients. These transients are often the result of a local system response to an impulsive transient.

A transient with a primary frequency component between 5 and 500 kHz with duration measured in the tens of microseconds (or several cycles of the principal frequency) is termed a medium-frequency transient.

Back-to-back capacitor energization results in oscillatory transient currents in the tens of kilohertz as illustrated in below Fig. Cable switching results in oscillatory voltage transients in the same frequency range. Medium-frequency transients can also be the result of a system response to an impulsive transient.

A transient with a primary frequency component less than 5 kHz, and a duration from 0.3 to 50 ms, is considered a low-frequency transient. This category of phenomena is frequently encountered on utility sub transmission and distribution systems and is caused by many types of events. The most frequent is capacitor bank energization, which typically results in an oscillatory voltage transient with a primary frequency between 300 and 900 Hz.

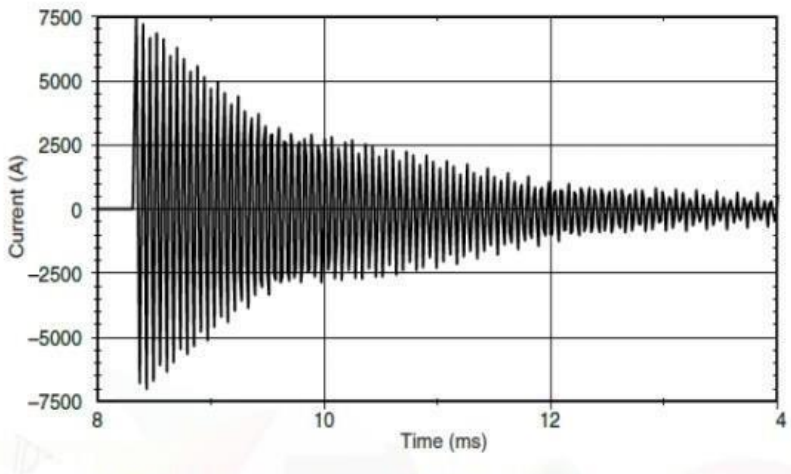

Oscillatory transient current caused by back-to-back capacitor switching.

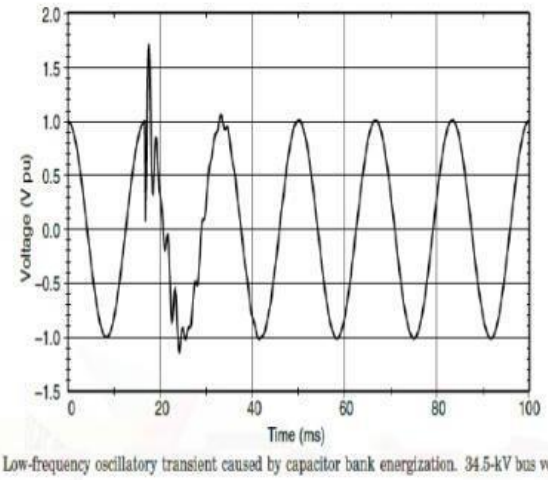

Low-frequency oscillatory transient caused by capacitor bank energization. 34.5-kV bus voltage.

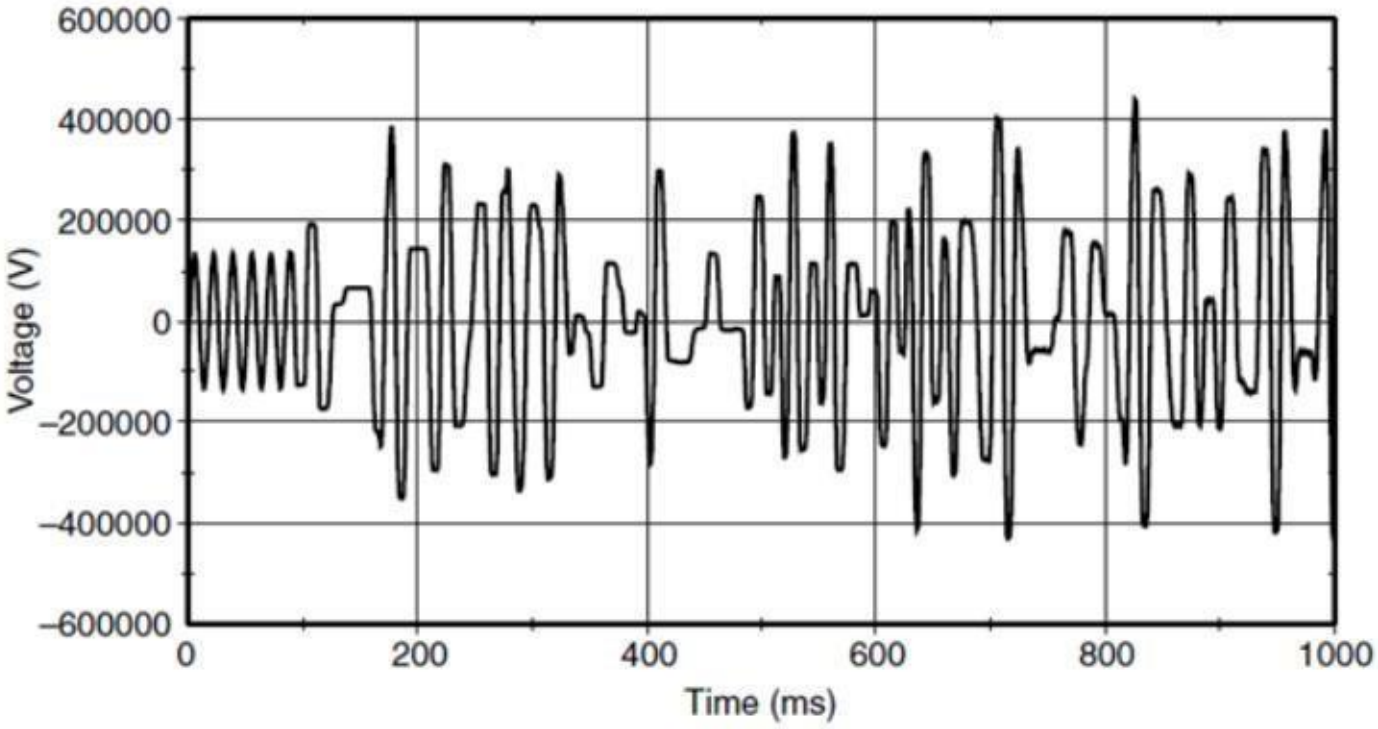

Low-frequency oscillatory transient caused by ferroresonance of an unloaded transformer.

2. Long Duration Voltage Variations:

- Long-duration voltage variations refer to deviations in root-mean-square (r.m.s) voltage at power frequencies that persist for more than 1 minute.
- Long-duration variations can be either over voltages or under voltages.
- Over voltages and under voltages are not caused by system faults, but load variations on the system and system switching operations.

1. Overvoltage:

An over voltage is an increase in the rms ac voltage greater than 110 percent at the power frequency for a duration longer than 1 min.

Overvoltages are usually the results of load switching. The over voltages result because either the system is too weak for the desired voltage regulation or voltage controls are inadequate. Incorrect tap settings on transformers can also result in system overvoltages.

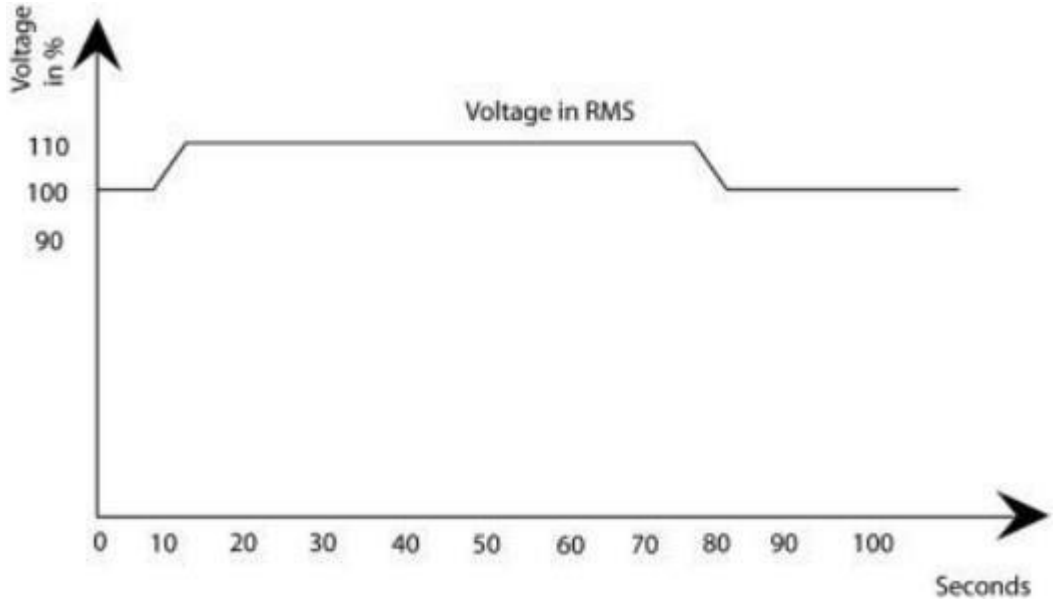

2. Undervoltage:

An under voltage is a decrease in the rms ac voltage to less than 90 percent at the power frequency for a duration longer than 1 min.

Undervoltages are the results of switching events that are the opposite of the events that cause over voltages. A load switching on or a capacitor bank switching off can cause an under voltage until voltage regulation equipment on the system can bring the voltage back to within tolerances. Overloaded circuits can result in undervoltages also.

The term brownout is often used to describe sustained periods of under voltage initiated as a specific utility dispatch strategy to reduce power demand.

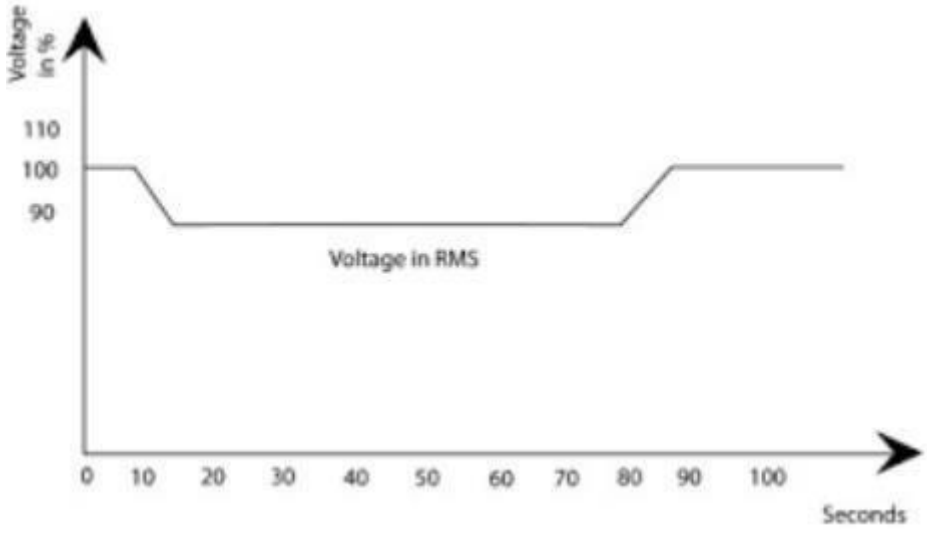

3. Sustained interruptions:

When the supply voltage has been zero for a period of time in excess of 1 minute, the long duration voltage variation is considered a sustained interruption.

Longer-lasting voltage disturbances than a minute frequently result in permanent damage to the system that must be fixed by hand before it can be restored. Outage, as defined in IEEE Standard 100 does not refer to a specific phenomenon, but rather to the state of a component in a system that has failed to function as expected.

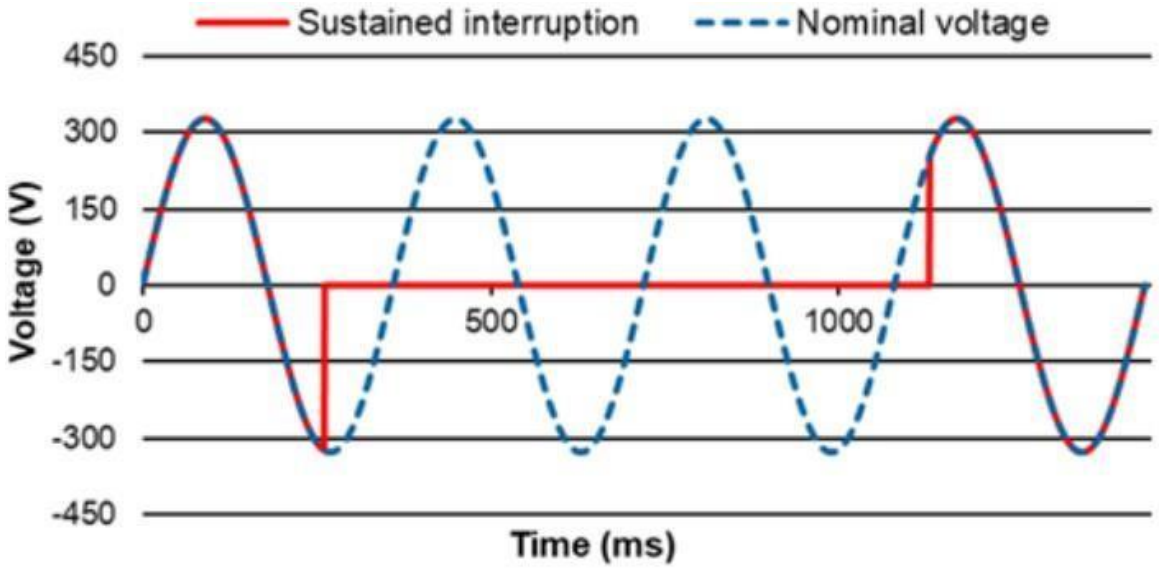

3. Short-Duration Voltage Variations:

This category encompasses the IEC category of voltage dips and short interruptions. Each type of variation can be designated as instantaneous, momentary, or temporary, depending on its duration.

Causes of Short duration voltage variations:

- Fault conditions
- Energization of large loads which require high starting currents
- Intermittent loose connections in power wiring

Depending on the fault location and the system conditions, the fault can cause:

- Voltage drops (sags)
- Voltage rises (swells), or
- A complete loss of voltage (interruptions).

1. Voltage drops (sags):

Sag is a decrease to between 0.1 and 0.9 pu in rms voltage or current at the power frequency for durations from 0.5 cycle to 1 min.

Voltage sags are usually associated with system faults but can also be caused by energization of heavy loads or starting of large motors.

A typical voltage sag that can be associated with a single- line-to-ground (SLG) fault on another feeder from the same substation as shown in below Fig. An 80 percent sag exists for about 3 cycles until the substation breaker is able to interrupt the fault current. Typical fault clearing times range from 3 to 30 cycles, depending on the fault current magnitude and the type of overcurrent protection.

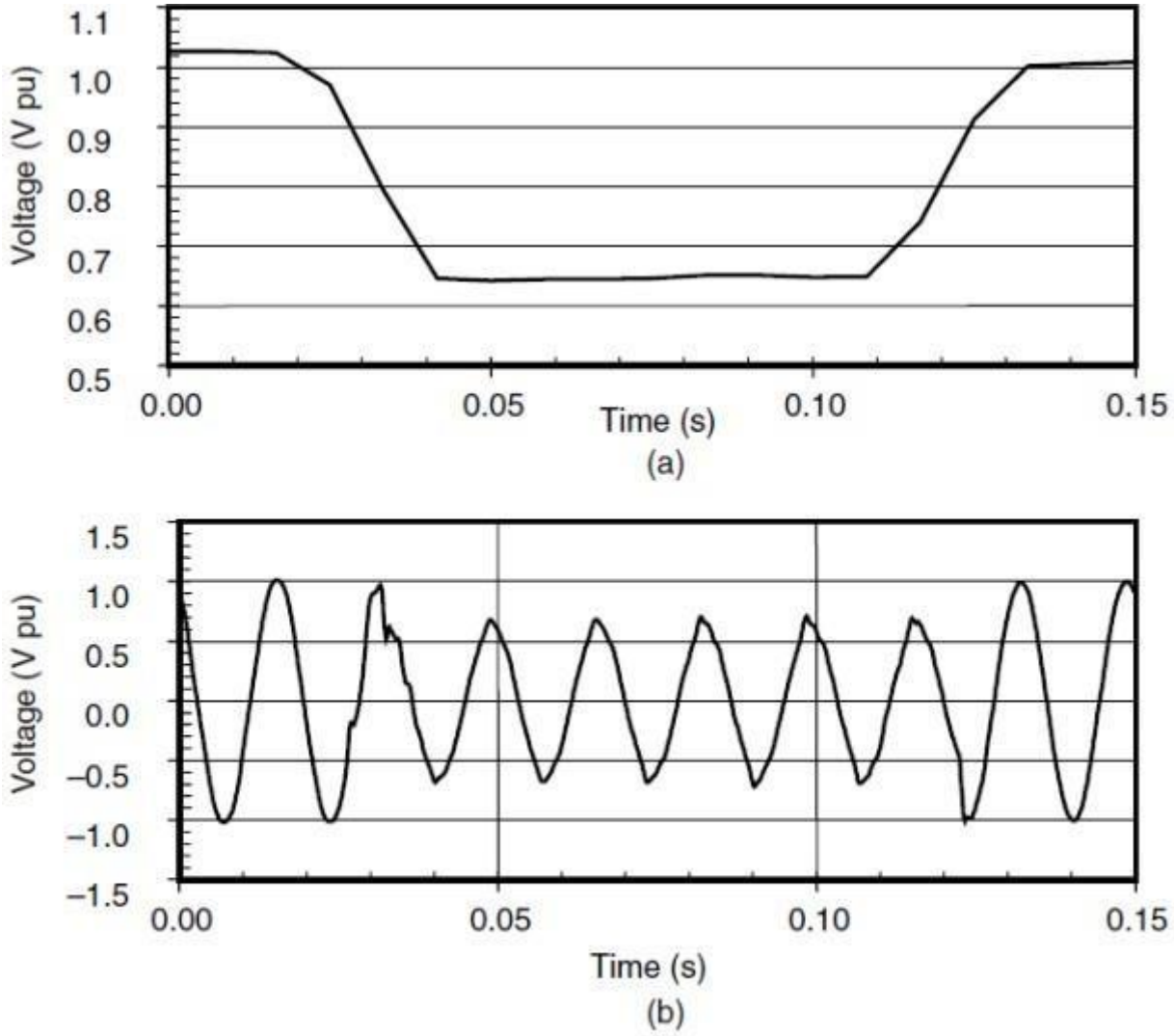

Voltage sag caused by an SLG fault. (*a*) RMS waveform for voltage sag event. (*b*) Voltage sag waveform.

The effect of a large motor starting. An induction motor will draw 6 to 10 times its full load current during start-up. If the current magnitude is large relative to the available fault current in the system at that point, the resulting voltage sag can be significant. In this case, the voltage sags immediately to 80 percent and then gradually returns to normal in about 3 s as shown in below Fig.

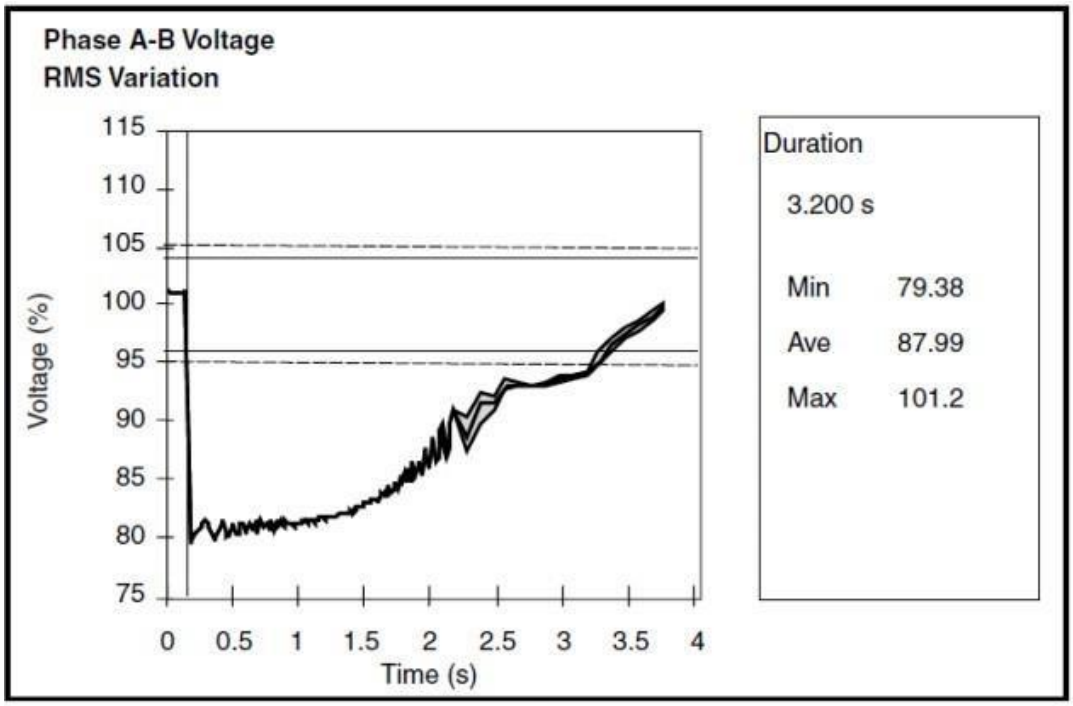

Temporary voltage sag caused by motor starting.

Sag durations are subdivided here into three categories—instantaneous, momentary, and temporary.

2. Voltage Rises or Swells:

A swell is defined as an increase to between 1.1 and 1.8 pu in rms voltage or current at the power frequency for durations from 0.5 cycle to 1 min.

Swells are characterized by their magnitude (rms value) and duration. The term momentary overvoltage is used as a synonym for the term swell.

As with sags, swells are usually associated with system fault conditions, but they are not as common as voltage sags. One way that a swell can occur is from the temporary voltage rise on the unfaulted phases during an SLG fault. A voltage swell caused by an SLG fault shown in below Fig. Swells can also be caused by switching off a large load or energizing a large capacitor bank.

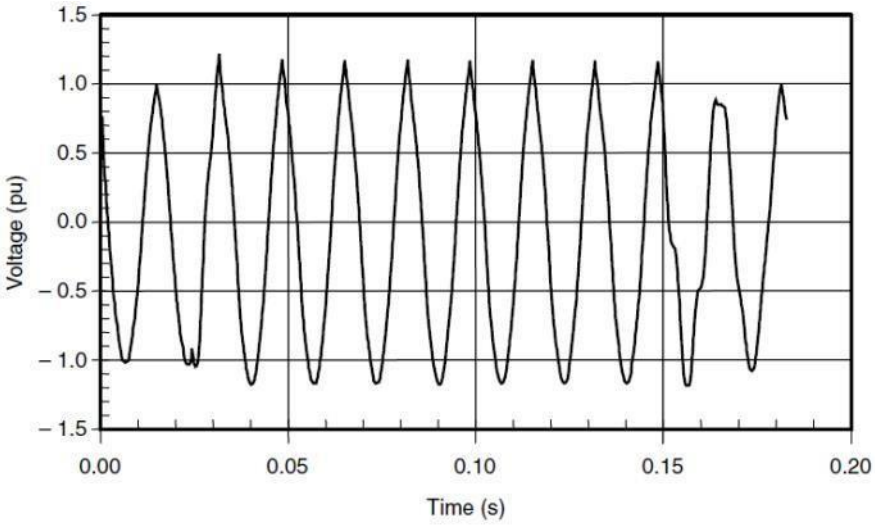

Instantaneous voltage swell caused by an SLG fault.

The severity of a voltage swell during a fault condition is a function of

a) The fault location

b) System impedance and

c) Grounding

On an ungrounded system, with infinite zero-sequence impedance, the line-to-ground voltages on the ungrounded phases will be 1.73 pu during an SLG fault condition. Close to the substation on a grounded system, there will be little or no voltage rise on the unfaulted phases because the substation transformer is usually connected delta-wye, providing a low-impedance zero-sequence path for the fault current. Faults at different points along four-wire, multi grounded feeders will have varying degrees of voltage swells on the unfaulted phases.

3. Interruption:

An interruption occurs when the supply voltage or load current decreases to less than 0.1 pu for a period of time not exceeding 1 min.

Interruptions can be the result of

1. Power system faults

2. Equipment failures

3. Control malfunctions

The interruptions are measured by their duration since the voltage magnitude is always less than 10 percent of nominal. The duration of an interruption due to a fault on the utility system is determined by the operating time of utility protective devices. Instantaneous reclosing generally will limit the interruption caused by a nonpermanent fault to less than 30 cycles. Delayed reclosing of the protective device may cause a momentary or temporary interruption. The duration of an interruption due to equipment malfunctions or loose connections can be irregular.

Some interruptions may be preceded by voltage sag when these interruptions are due to faults on the source system. The voltage sag occurs between the time a fault initiates and the protective device operates. A momentary interruption during which voltage on one phase sags to about 20 percent for about 3 cycles and then drops to zero for about 1.8 s until the recloser closes back in as shown in below Fig.

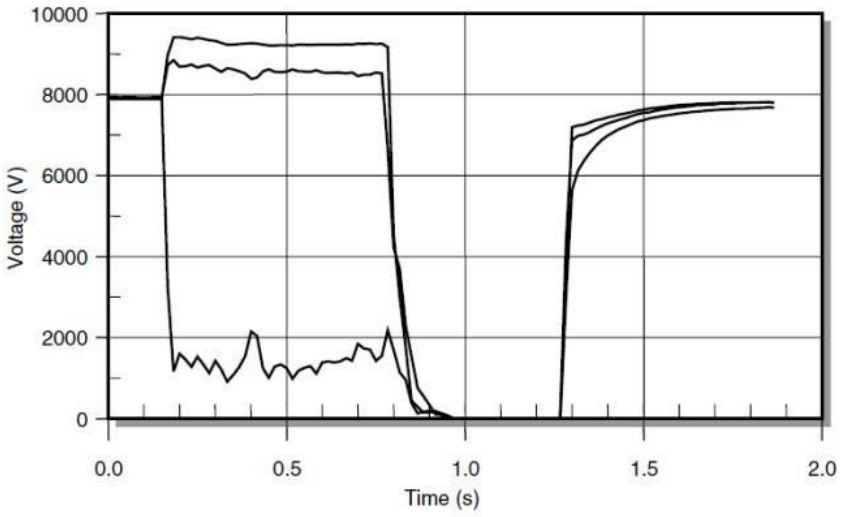

Three-phase rms voltages for a momentary interruption due to a fault and subsequent recloser operation.

4. Power Frequency Variations:

Power frequency variations are defined as the deviation of the power system fundamental frequency from it specified nominal value i.e.50 or 60 Hz.

The power system frequency is directly related to the rotational speed of the generators supplying the system. There are slight variations in frequency as the dynamic balance between load and generation changes. The size of the frequency shift and its duration depend on the load characteristics and the response of the generation control system to load changes.

Power Frequency Variations caused by

1. Faults on the bulk power transmission system
2. A large block of load being disconnected
3. A large source of generation going off-line

On modern interconnected power systems, significant frequency variations are rare. Frequency variations of consequence are much more likely to occur for loads that are supplied by a generator isolated from the utility system. In such cases, governor response to abrupt load changes may not be adequate to regulate within the narrow bandwidth required by frequency sensitive equipment.

Frequency variations for a 24-h period on a typical 13-kV substation bus as shown in below Fig.

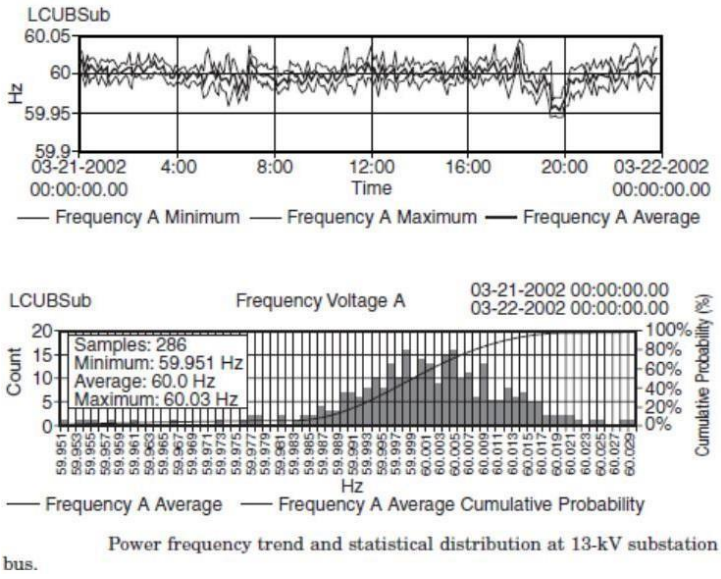

Power frequency trend and statistical distribution at 13-kV substation bus.

5. Voltage Imbalance or Unbalance:

Voltage imbalance (also called voltage unbalance) is sometimes defined as the maximum deviation from the average of the three-phase voltages or currents, divided by the average of the three-phase voltages or currents, expressed in percent.

According to standards 6, 8, 11, 12 Imbalance defines as the ratio of either the negative or zero sequence component to the positive-sequence component can be used to specify the percent unbalance. The most recent standards11 specify that the negative-sequence method be used. These two ratios for a 1-week trend of imbalance on a residential feeder as shown in below Fig.

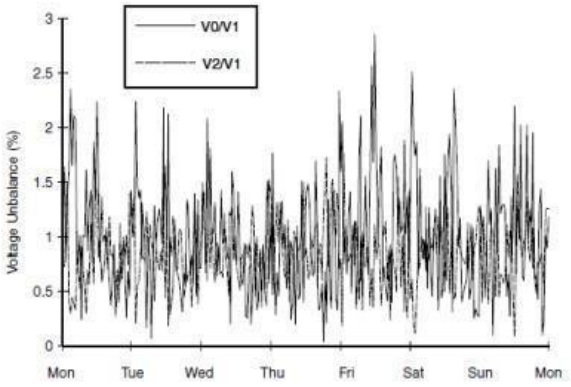

Voltage unbalance trend for a residential feeder.

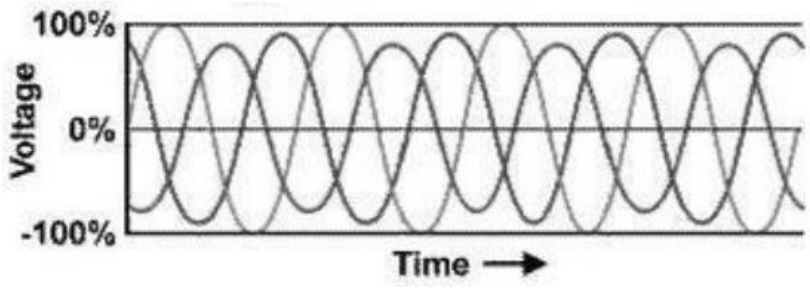

The primary sources of voltage unbalances are

1. Less than 2 percent is single-phase loads on a three-phase circuit.

2. Voltage unbalance can also be the result of blown fuses in one phase of a three-phase capacitor bank.

3. Severe voltage unbalance i.e. greater than 5 percent can result from single-phasing conditions.

6. Voltage Fluctuations or Flickers:

Voltage fluctuations are systematic variations of the voltage envelope or a series of random voltage changes, the magnitude of which does not normally exceed the voltage ranges specified by ANSI C84.1 of 0.9 to 1.1 pu.

The characteristics of voltage fluctuations depend on the load type and size and the power system capacity. An example of a fluctuating voltage waveform shown in below Fig. The

voltage waveform exhibits variations in magnitude due to the fluctuating nature or intermittent operation of connected loads.

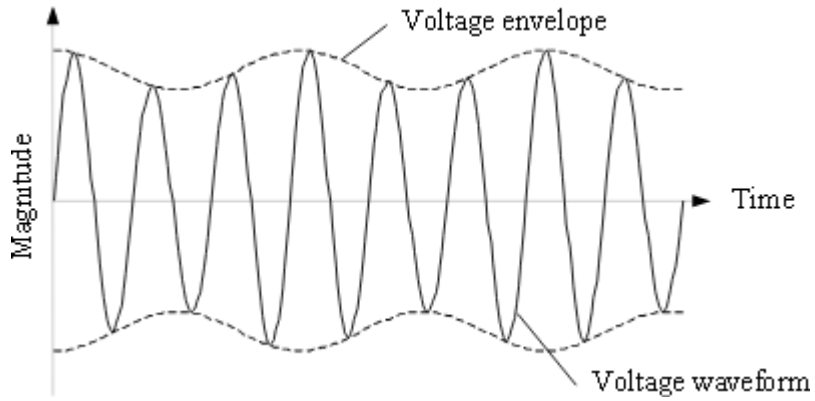

The frequency of the voltage envelope is often referred to as the flicker frequency. Thus there are two important parameters to voltage fluctuations, the frequency of fluctuation and the magnitude of fluctuation. Both of these components are significant in the adverse effects of voltage fluctuations.

Loads that can exhibit continuous, rapid variations in the load current magnitude can cause voltage variations that are often referred to as flicker. The term flicker is derived from the impact of the voltage fluctuation on lamps such that they are perceived by the human eye to flicker.

Voltage fluctuations are caused when loads draw currents having significant sudden or periodic variations. The fluctuating current that is drawn from the supply causes additional voltage drops in the power system leading to fluctuations in the supply voltage. Loads that exhibit continuous rapid variations are thus the most likely cause of voltage fluctuations.

- Arc furnaces
- Arc welders
- Installations with frequent motor starts (air conditioner units, fans)

- Motor drives with cyclic operation (mine hoists, rolling mills)
- Equipment with excessive motor speed changes (wood chippers, car shredders)

The measurement method simulates the lamp/eye/brain transfer function and produces a fundamental metric called short-term flicker sensation (Pst). This value is normalized to 1.0 to represent the level of voltage fluctuations sufficient to cause noticeable flicker to 50 percent of a sample observing group. Another measure called long-term flicker sensation (Plt) is often used for the utility power contracts.

The characteristics of these power quality problems are as listed below

Power Quality Issue	*Duration*	*Magnitude*
Transients:		
Impulsive	<1*m*sec	-
Oscillatory		
Low frequency	0.3 to 50*m*sec	0 – 4*pu*
Medium frequency	20μsec	0 – 8*pu*
High frequency	5μsec	0 – 4*pu*
Voltage variations:		
Short duration:		
Sag/Dip	0.5 cycles to <1*m*sec (0.5 cycles to 30 cycles)	0.1 to 0.9*pu*
Swell	"	1.1 to 1.8*pu*
Interruptions	"	<0.1*pu*
Long duration:		
Over voltage	> 1min	0.8 to 0.9*pu*
Under voltage	> 1min	1.1 to 1.2*pu*
Sustained Interruption	> 1min	0*pu*
Waveform distortion		
DC offset	Steady state	0 to 0.1%
Harmonics	"	0 to 20%
Notching	"	-
Noise	"	0 to 1%
Voltage fluctuations	Intermittent	0.1 to 7%
Frequency deviations	< 10 sec	-

Sources of sags and interruptions:

Voltage sags and interruptions are generally caused by faults on the utility system.

Consider a customer that is supplied from the feeder supplied by circuit breaker 1 on the diagram shown in below Fig.

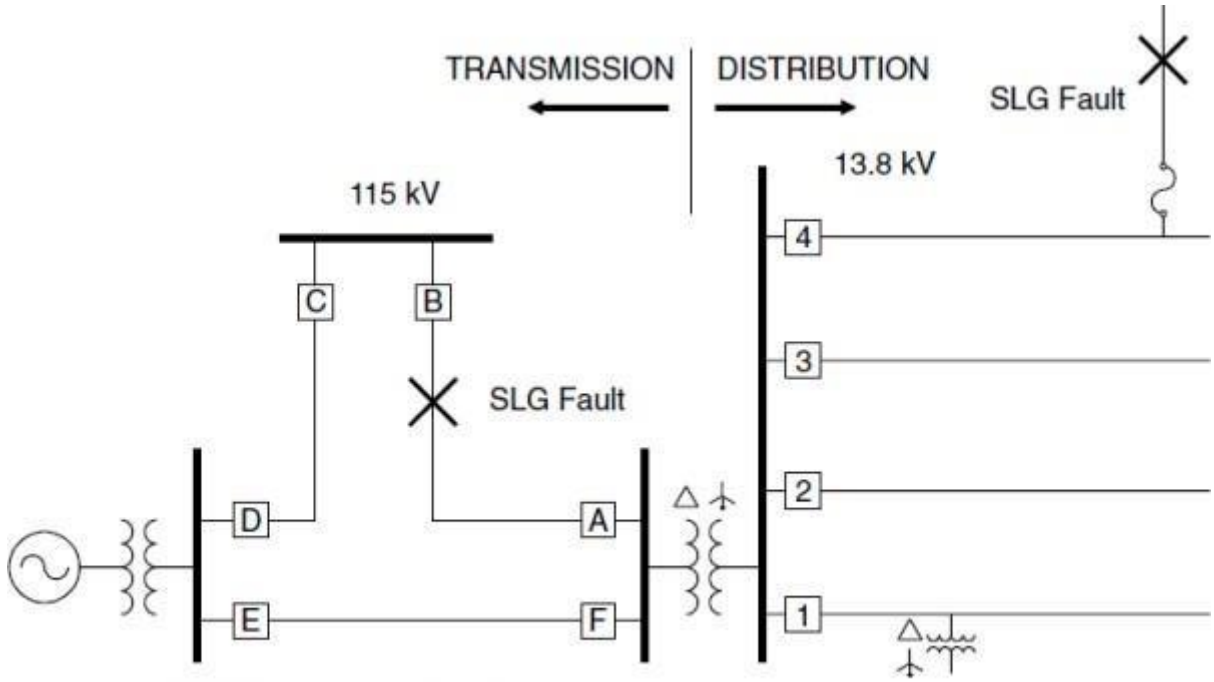

Fault locations on the utility power system.

The most common locations of fault on utility distribution system are

1. Fault on same Feeder
2. Fault on Parallel Feeder

If there is a fault on the same feeder, the customer will experience voltage sag during the fault followed by an interruption when the breaker opens to clear the fault. If the fault is temporary in nature, a reclosing operation on the breaker should be successful and the interruption will only be temporary. It will usually require about 5 or 6 cycles for the breaker to operate, during which time a voltage sag occurs. The breaker will remain open for typically a

minimum of 12 cycles up to 5 s depending on utility reclosing practices. Sensitive equipment will almost surely trip during this interruption.

A much more common event would be a fault on one of the other feeders from the substation, i.e., a fault on a parallel feeder, or a fault somewhere on the transmission system. In either of these cases, the customer will experience a voltage sag during the period that the fault is actually on the system. As soon as breakers open to clear the fault, normal voltage will be restored at the customer.

Note that to clear the fault shown on the transmission system, both breakers A and B must operate. Transmission breakers will typically clear a fault in 5 or 6 cycles. In this case there are two lines supplying the distribution substation and only one has a fault. Therefore, customers supplied from the substation should expect to see only a sag and not an interruption. The distribution fault on feeder 4 may be cleared either by the lateral fuse or the breaker. Any of these fault locations can cause equipment to misoperate in customer facilities. The relative importance of faults on the transmission system and the distribution system will depend on the specific characteristics of the systems and the sensitivity of the equipment to voltage sags.

The pie chart shown in below fig illustrates the events by the faults on own circuits, Transmission System and Parallel Circuits equipment caused misoperation for one industrial customer.

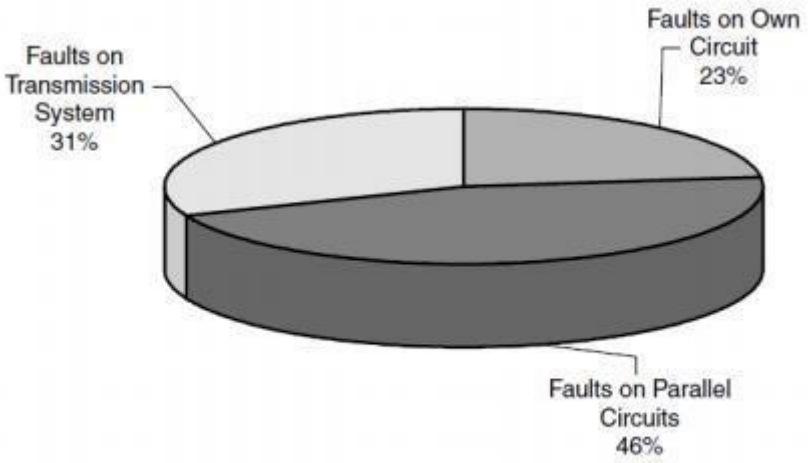

Example of fault locations that caused misoperation of sensitive production equipment at an industrial facility

The momentary interruption observed downline from the fault shown in below Fig. The interrupting device in this case was a line recloser that was able to interrupt the fault very quickly in about 2.5 cycles. This device is set for two fast operations and two delayed operations. As shown in figure there is only the brief sag to 65 percent voltage for the first fast operation. There was identical sag for the second operation.

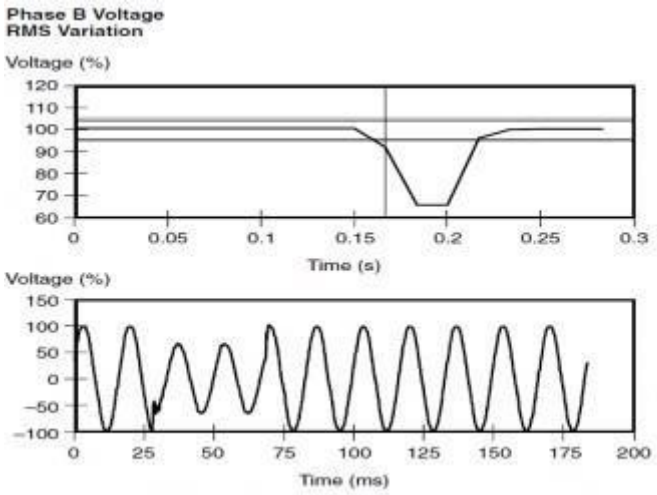

Voltage sag due to a short-circuit fault on a parallel utility feeder.

Below Fig clearly shows the voltage sag prior to fault clearing and the subsequent two fast recloser operations. The reclose time was a little more than 2 s, a very common time for a utility line recloser.

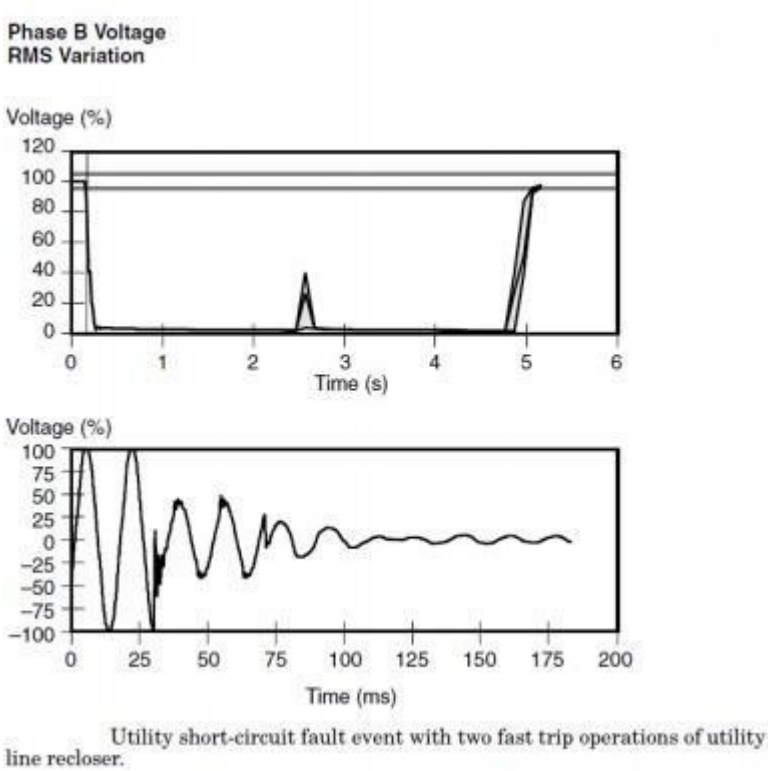

Utility short-circuit fault event with two fast trip operations of utility line recloser.

Estimating Voltage Sag Performance:

It is important to understand the expected voltage sag performance of the supply system so that facilities can be designed and equipment specifications developed to assure the optimum operation of production facilities. The following is a general procedure for working with industrial customers to assure compatibility between the supply system characteristics and the facility operation:

1. Determine the number and characteristics of voltage sags that result from transmission system faults.

2. Determine the number and characteristics of voltage sags that result from distribution system faults.

3. Determine the equipment sensitivity to voltage sags. This will determine the actual performance of the production process based on voltage sag performance calculated in steps 1 and 2.

4. Evaluate the economics of different solutions that could improve the performance, either on the supply system.

The steps in this procedure are

1. Area of vulnerability
2. Equipment sensitivity to voltage sags
3. Transmission system sag performance evaluation
4. Utility distribution system sag performance evaluation

1. Area of vulnerability:

The concept of an area of vulnerability has been developed to evaluate the sensitive equipment being subjected to voltage lower than its minimum voltage sag ride-through capability.

"The minimum voltage sag ride-through capability is defined as the minimum voltage magnitude at which equipment can withstand or tolerate without misoperation or failure. This is also known as the equipment voltage sag immunity or susceptibility limit."

An area of vulnerability is determined by the total circuit miles of exposure to faults that can cause voltage magnitudes at an end-user facility to drop below the equipment minimum voltage sag ride-through capability.

Below Figure shows an example of an area of vulnerability diagram for motor contactor and adjustable-speed-drive loads at an end-user facility served from the distribution system. The loads will be subject to faults on both the transmission system and the distribution system. The actual number of voltage sags that a facility can expect is determined by combining the area of vulnerability with the expected fault performance for this portion of the power system. The expected fault performance is usually determined from historical data.

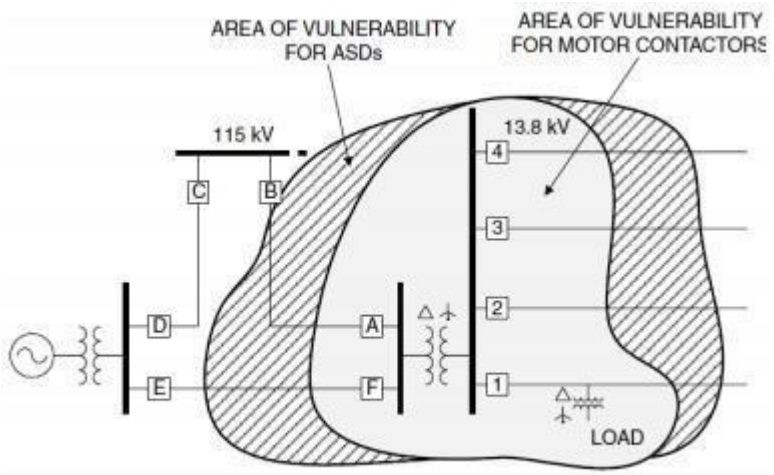

Illustration of an area of vulnerability.

2. Equipment sensitivity to voltage sags:

Equipment within an end-user facility may have different sensitivity to voltage sags. Equipment sensitivity to voltage sags is very dependent on the

1. Specific load type
2. Control Settings and
3. Applications.

Consequently, it is often difficult to identify which characteristics of a given voltage sag are most likely to cause equipment to misoperate. The most commonly used characteristics are the duration and magnitude of the sag.

Generally, equipment sensitivity to voltage sags can be divided into three categories:

1. Equipment sensitive to only the magnitude of a voltage sag: This group includes devices such as undervoltage relays, process controls, motor drive controls, and many types of automated machines. Devices in this group are sensitive to the minimum (or maximum) voltage magnitude experienced during a sag (or swell). The duration of the disturbance is usually of secondary importance for these devices.

2. Equipment sensitive to both the magnitude and duration of a voltage Sag: This group includes virtually all equipment that uses electronic power supplies. Such equipment misoperates or fails when the power supply output voltage drops below specified values. Thus, the important characteristic for this type of equipment is the duration that the rms voltage is below a specified threshold at which the equipment trips.

3. Equipment sensitive to characteristics other than magnitude and Duration: Some devices are affected by other sag characteristics such as the phase unbalance during the sag event, the point-in-the wave at which the sag is initiated, or any transient oscillations occurring during the disturbance. These characteristics are more subtle than magnitude and duration, and their impacts are much more difficult to generalize.

The most common methods to quantify equipment susceptibility to voltage sags is using a magnitude-duration plot as shown below Fig. It shows the voltage sag magnitude that will cause equipment to misoperate as a function of the sag duration.

The curve labeled CBEMA and ITI represents typical equipment sensitivity characteristics. Typical loads will likely trip off when the voltage is below the CBEMA, or ITI, curve. The curve labeled ASD represents an example ASD voltage sag ride through capability for a device that is very sensitive to voltage sags. It trips for sags below 0.9 pu that last for

only 4 cycles. The contactor curve represents typical contactor sag ride-through characteristics. It trips for voltage sags below 0.5 pu that last for more than 1 cycle.

The area of vulnerability for motor contactors indicates that faults within this area will cause the end-user voltage to drop below 0.5 pu. Motor contactors having a minimum voltage sag ride-through capability of 0.5 pu would have tripped out when a fault causing a voltage sag with duration of more than 1 cycle occurs within the area of vulnerability. However, faults outside this area will not cause the voltage to drop below 0.5 pu. The same applies to the area of vulnerability for ASD loads. The less sensitive the equipment, the smaller the area of vulnerability will be fewer times sags will cause the equipment to misoperate.

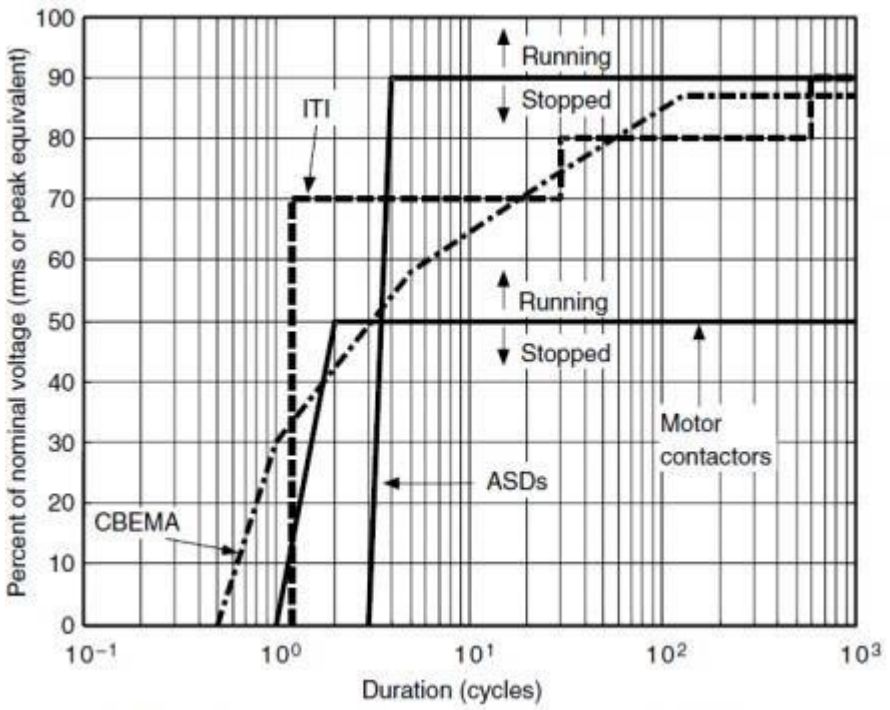

Typical equipment voltage sag ride-through capability curves.

4. Utility distribution system sag performance evaluation:

Customers that are supplied at distribution voltage levels are impacted by faults on both the transmission system and the distribution system. The overall voltage sag performance at an

end-user facility is the total of the expected voltage sag performance from the transmission and distribution systems.

Below Figure shows a typical distribution system with multiple feeders and fused branches, and protective devices. The utility protection scheme plays an important role in the voltage sag and momentary interruption performance.

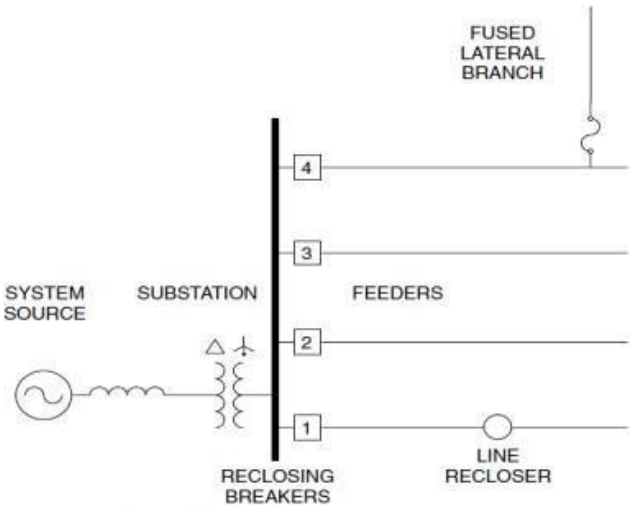

Typical distribution system illustrating protection devices.

The critical information needed to compute voltage sag performance can be summarized as follows:

- Number of feeders supplied from the substation.
- Average feeder length.
- Average feeder reactance.
- Short-circuit equivalent reactance at the substation.
- Feeder reactors, if any.
- Average feeder fault performance which includes three-phase-line to ground (3LG) faults and single-line-to-ground (SLG) faults in faults per mile per month

There are two possible locations for faults on the distribution systems, i.e., on the same feeder and on parallel feeders. The computation of the expected voltage sag performance can be performed at these locations as follows:

1. Faults on Parallel Feeders:

Voltage experienced at the end-user facility following a fault on parallel feeders can be estimated by calculating the expected voltage magnitude at the substation. The voltage magnitude at the substation is impacted by the

1. Fault impedance and location
2. The configuration of the power system and
3. The system protection scheme.

Below figure illustrates the effect of the distance between the substation and the fault locations for 3LG and SLG faults on a radial distribution system. The SLG fault curve shows the A-B phase bus voltage on the secondary of a delta-wye–grounded step-down transformer, with an A phase-to-ground fault on the primary.

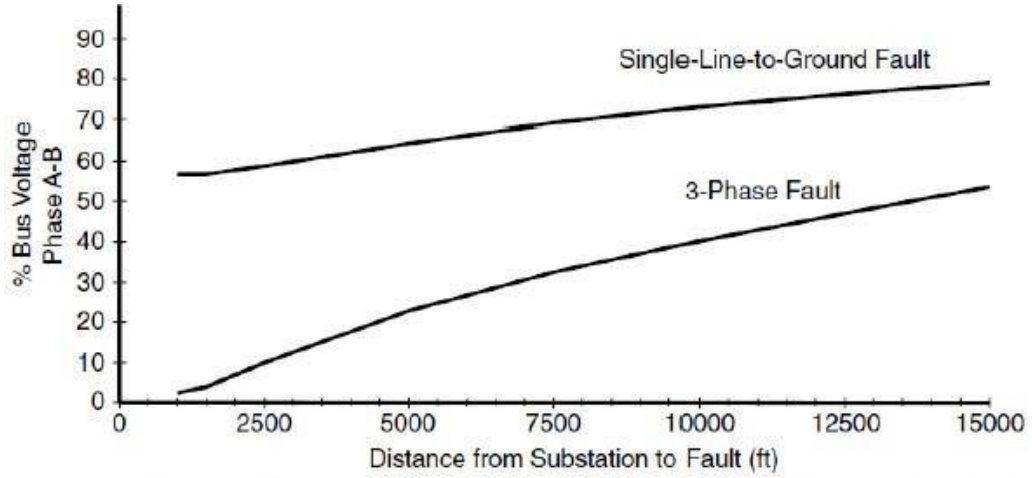

Example of voltage sag magnitude at an end-user location as a function of the fault location along a parallel feeder circuit.

The voltage sag performance for a specific sensitive equipment having the minimum ride-through voltage of vs can be computed as follows:

$$E_{\text{parallel}}(v_s) = N_1 \times E_{p1} + N_3 \times E_{p3}$$

where N1 and N3 are the fault performance data for SLG and 3LG faults in faults per miles per month, and Ep1 and Ep3 are the total circuit miles of exposure to SLG and 3LG faults on parallel feeders that result in voltage sags below the minimum ride-through voltage vs at the end-user location.

2. Faults on the Same Feeder:

In this step the expected voltage sag magnitude at the end-user location is computed as a function of fault location on the same feeder. Note that, however, the computation is performed only for fault locations that will result in a sag but will not result in a momentary interruption, which will be computed separately. Examples of such fault locations include faults beyond a downline recloser or a branched fuse that is coordinated to clear before the substation recloser. The voltage sag performance for specific sensitive equipment with ride-through voltage vs is computed as follows:

$$E_{\text{same}}(v_s) = N_1 \times E_{s1} + N_3 \times E_{s3}$$

where Es1and Es3 are the total circuit miles of exposure to SLG and 3LG on the same feeders that result in voltage sags below vs at the end-user location.

The total expected voltage sag performance for the minimum ride through voltage vs would be the sum of expected voltage sag performance on the parallel and the same feeders, i.e.,

$$E \quad (v_s) = E_{\text{parallel}}(v_s) + E_{\text{same}}(v_s)$$

The expected interruption performance at the specified location can be determined by the length of exposure that will cause a breaker or other protective device in series with the customer facility to operate. For example, if the protection is designed to operate the substation breaker for any fault on the feeder, then this length is the total exposure length. The expected number of interruptions can be computed as follows:

$$E_{\text{int}} = L_{\text{int}} \times (N_1 + N_3)$$

where Lint is the total circuit miles of exposure to SLG and 3LG that results in interruptions at an end-user facility.

Methods of mitigation voltage sags:

A voltage sag happens when the rms voltage decreases between 10 and 90% of nominal voltage for one-half cycle to one minute. Voltage sags can be caused by various factors, such as SC fault currents, Switching operations, Equipment failure, trees falling on the power lines etc.

Voltage sags can be mitigated using various technologies and methods. They are

1. Ferroresonant transformers
2. Magnetic synthesizers
3. Active series compensators
4. Online UPS
5. Stand by UPS or Offline UPS
6. Hybrid UPS

7. Motor-Generator Sets

8. Flywheel Energy Storage Systems (FESS's)

9. Superconducting Magnetic Energy Storage (SMES) devices

10. Static transfer switches and fast transfer switches

- Dynamic Voltage Restorers (DVRs)
- Static VAR compensation
- Solid-State Transfer Switch

1. Ferroresonant Transformers:

Ferroresonant transformers, also called constant-voltage transformers (CVTs), can handle most voltage sag conditions. CVTs are especially attractive for constant, low-power loads. Variable loads, especially with high inrush currents, present more of a problem for CVTs because of the tuned circuit on the output. Ferroresonant transformers are basically 1:1 transformers which are excited high on their saturation curves, thereby providing an output voltage which is not significantly affected by input voltage variations. A typical ferroresonant transformer schematic circuit diagram is shown in below Fig.

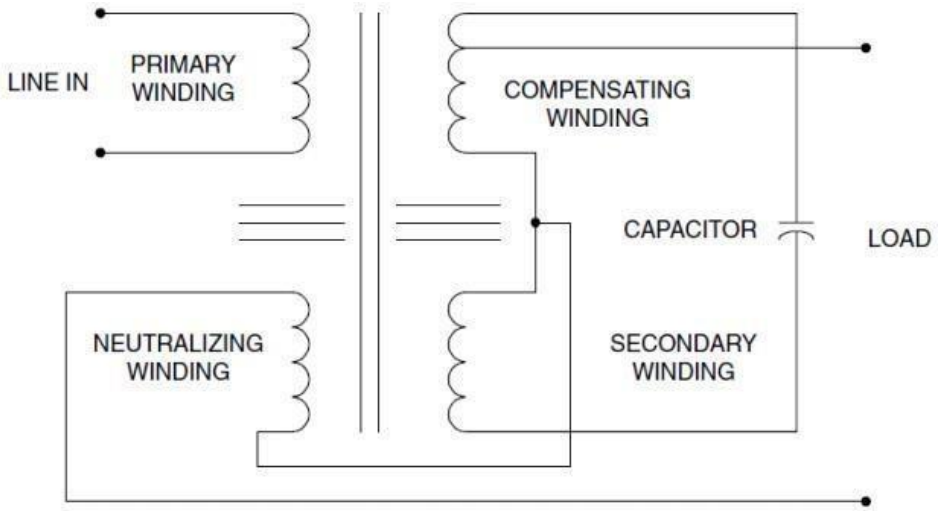

Schematic of ferroresonant constant-voltage transformer.

Below figure shows the voltage sag ride-through improvement of a process controller fed from a 120-VAferroresonant transformer. With the CVT, the process controller can ride through a voltage sag down to 30 percent of nominal, as opposed to 82 percent without one. Notice how the ride-through capability is held constant at a certain level. The reason for this is the small power requirement of the process controller, only 15 VA.

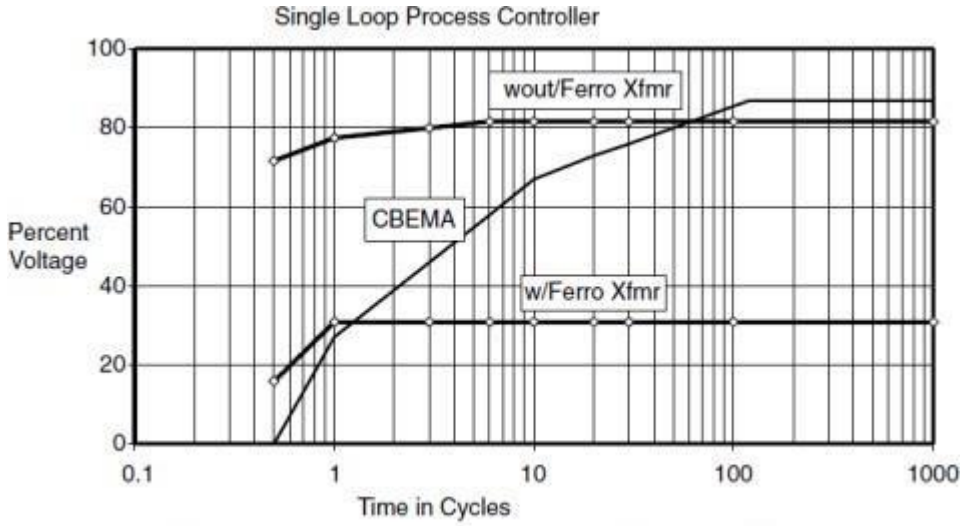

Voltage sag improvement with ferroresonant transformer.

Ferroresonant transformers should be sized significantly larger than the load. Below figure shows the allowable voltage sag as a percentage of nominal voltage versus ferroresonant transformer loading, as specified by one manufacturer. At 25 percent of loading, the allowable voltage sag is 30 percent of nominal, which means that the CVT will output over 90 percent normal voltage as long as the input voltage is above 30 percent.

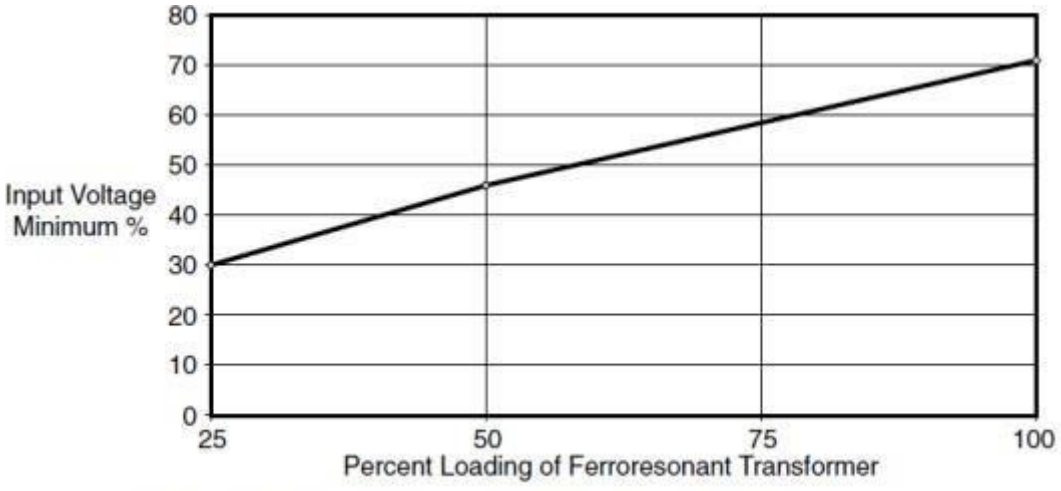

Voltage sag versus ferroresonant transformer loading.

This is important since the plant voltage rarely falls below 30 percent of nominal during voltage sag conditions. As the loading is increased, the corresponding ride-through capability is reduced, and when the ferroresonant transformer is overloaded i.e.150 percent loading, the voltage will collapse to zero.

2. Magnetic Synthesizers:

Magnetic synthesizers use a similar operating principle to CVTs except they are three phase devices and take advantage of the three-phase magnetics to provide improved voltage sag support and regulation for three-phase loads. They are applicable over a size range from about 15 to 200 kVA and are typically applied for process loads of larger computer systems where voltage sags or steady-state voltage variations are important issues. A block diagram of the process is shown in below Fig.

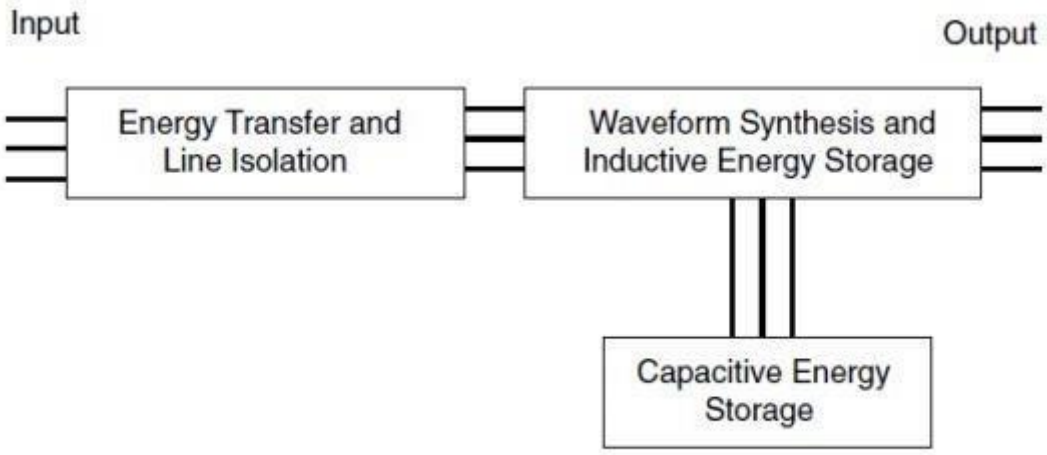

Block diagram of magnetic synthesizer.

Energy transfer and line isolation are accomplished through the use of nonlinear chokes. This eliminates problems such as line noise. The ac output waveforms are built by combining distinct voltage pulses from saturated transformers. The waveform energy is stored in the saturated transformers and capacitors as current and voltage. This energy storage enables the output of a clean waveform with little harmonic distortion. Finally, three-phase power is supplied through a zigzag transformer. Below figure shows a magnetic synthesizer's voltage sag ride-through capability as compared to the CBEMA curve, as specified by one manufacturer.

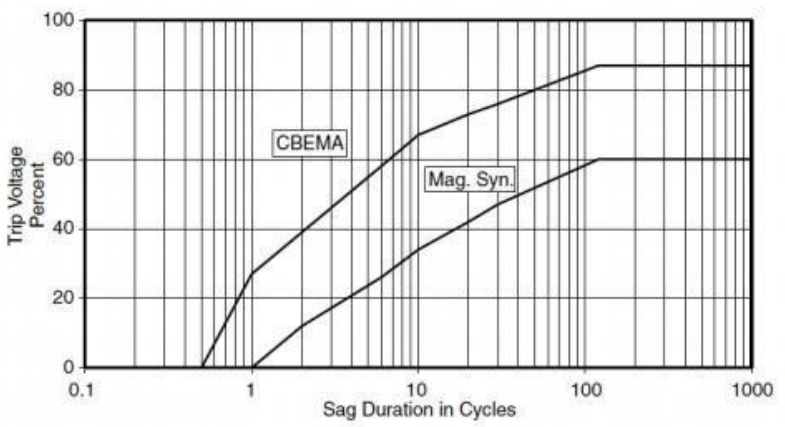

Magnetic synthesizer voltage sag ride-through capability.

3. Active series compensators:

Advances in power electronic technologies and new topologies for these devices is Active series compensators for providing voltage sag ride through support to critical loads. One of the important new options is a device that can boost the voltage by injecting a voltage in series with the remaining voltage during a voltage sag condition. These are referred to as active series compensation devices. They are available in size ranges from small single-phase devices (1 to 5 kVA) to very large devices that can be applied on the medium-voltage systems (2 MVAand larger). A one-line diagram illustrating the power electronics that are used to achieve the compensation is shown in below Fig.

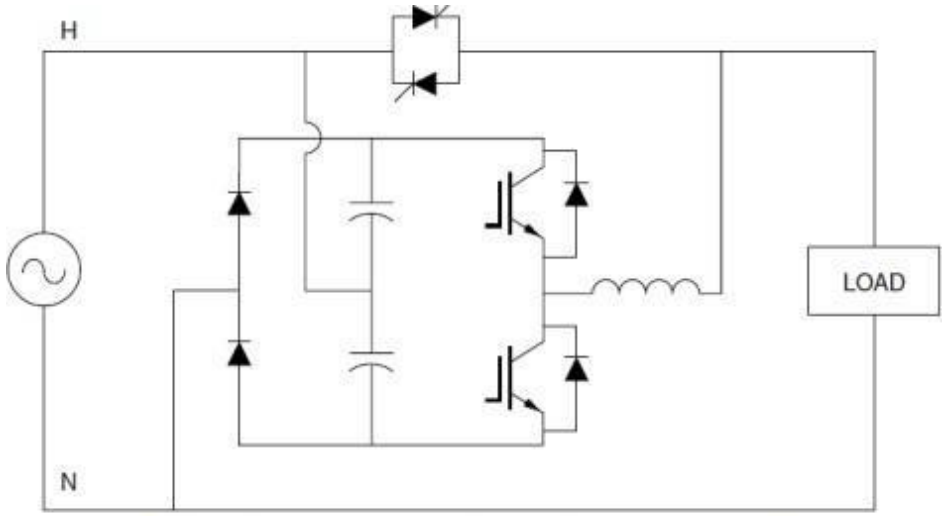

Topology illustrating the operation of the active series compensator.

When a disturbance to the input voltage is detected, a fast switch opens and the power is supplied through the series-connected electronics. This circuit adds or subtracts a voltage signal to the input voltage so that the output voltage remains within a specified tolerance during the disturbance. The switch is very fast so that the disturbance seen by the load is less than a quarter cycle in duration. This is fast enough to avoid problems with almost all sensitive

loads. The circuit can provide voltage boosting of about 50 percent, which is sufficient for almost all voltage sag conditions.

4. Online UPS:

Below figure shows a typical configuration of an on-line UPS. In this design, the load is always fed through the UPS. The incoming ac power is rectified into dc power, which charges a bank of batteries. This dc power is then inverted back into ac power, to feed the load. If the incoming ac power fails, the inverter is fed from the batteries and continues to supply the load. In addition to providing ride-through for power outages, an on-line UPS provides very high isolation of the critical load from all power line disturbances. However, the on-line operation increases the losses and may be unnecessary for protection of many loads.

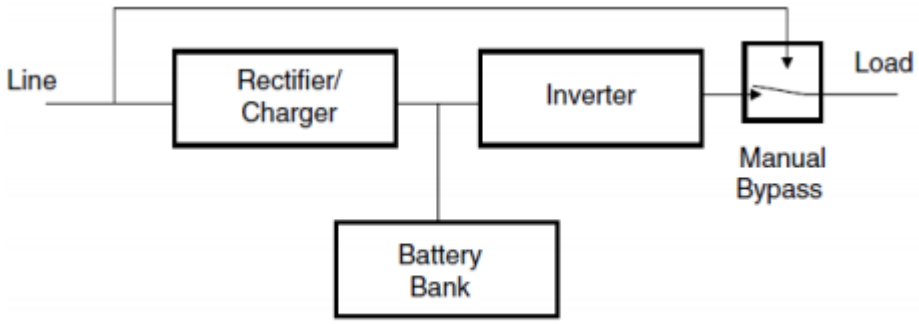

On-line UPS.

5. Stand by UPS:

A standby power supply shown in below fig is sometimes termed off-line UPS since the normal line power is used to power the equipment until a disturbance is detected and a switch transfers the load to the battery backed inverter. The transfer time from the normal source to the battery-backed inverter is important. The CBEMA curve shows that 8 ms is the lower limit on interruption through for power-conscious manufacturers.

Therefore a transfer time of 4 ms would ensure continuity of operation for the critical load. A standby power supply does not typically provide any transient protection or voltage regulation as does an on-line UPS. This is the most common configuration for commodity UPS units available at retail stores for protection of small computer loads.

UPS specifications include kilovolt ampere capacity, dynamic and static voltage regulation, harmonic distortion of the input current and output voltage, surge protection, and noise attenuation.

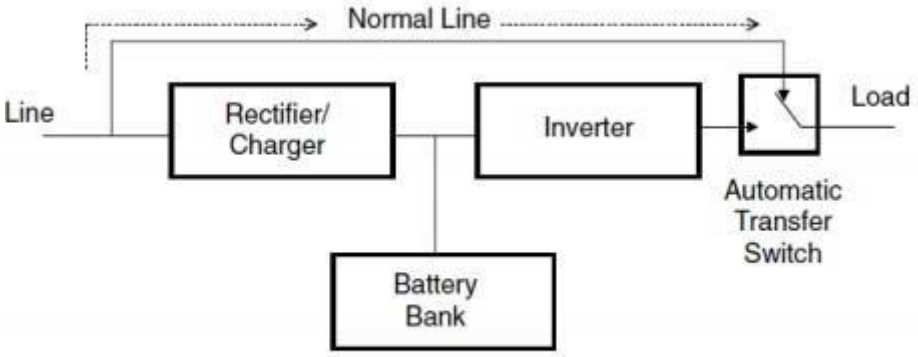

Standby UPS.

6. Hybrid UPS:

Similar in design to the standby UPS, the hybrid UPS shown in below fig utilizes a voltage regulator on the UPS output to provide regulation to the load and momentary ride-through when the transfer from normal to UPS supply is made.

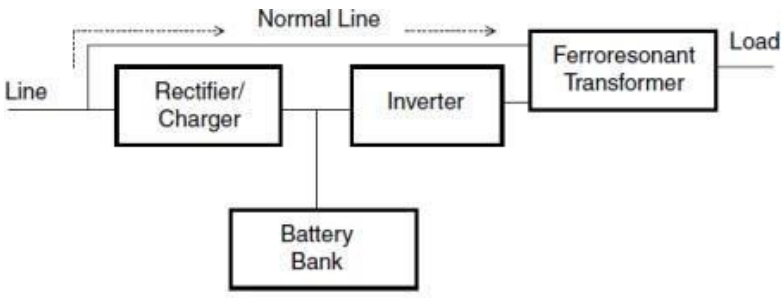

Hybrid UPS.

7. Motor-Generator Sets:

Motor-generator (M-G) sets come in a wide variety of sizes and configurations. This is a mature technology that is still useful for isolating critical loads from sags and interruptions on the power system. The concept is very simple, as illustrated in below Fig. A motor powered by the line drives a generator that powers the load. Flywheels on the same shaft provide greater inertia to increase ride-through time. When the line suffers a disturbance, the inertia of the machines and the flywheels maintains the power supply for several seconds. This arrangement may also be used to separate sensitive loads from other classes of disturbances such as harmonic distortion and switching transients.

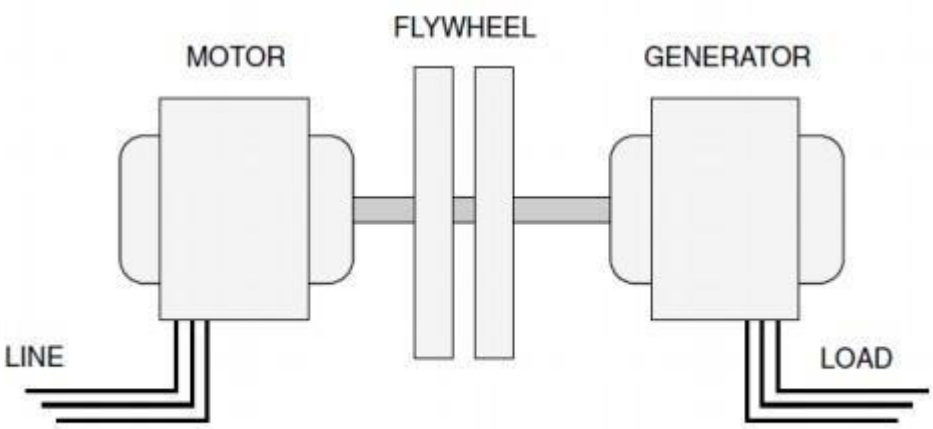

Block diagram of typical M-G set with flywheel.

While simple in concept, M-G sets have disadvantages for some types of loads:

1. There are losses associated with the machines are larger.
2. Noise and maintenance may be issues with some installations.
3. The frequency and voltage drop during interruptions as the machine slows. This may not work well with some loads.

Another type of M-G set uses a special synchronous generator called a written-pole motor that can produce a constant 60-Hz frequency as the machine slows. It is able to supply a constant output by continually changing the polarity of the rotor's field poles. Thus, each revolution can have a different number of poles than the last one. Constant output is maintained as long as the rotor is spinning at speeds between 3150 and 3600 revolutions per minute (rpm).

Flywheel inertia allows the generator rotor to keep rotating at speeds above 3150 rpm once power shuts off. The rotor weight typically generates enough inertia to keep it spinning fast enough to produce 60 Hz for 15 s under full load.

8 .Flywheel Energy Storage Systems (FESS's):

Motor-generator sets are only one means to exploit the energy stored in flywheels. A modern flywheel energy system uses high-speed flywheels and power electronics to achieve sag and interruption ride-through from 10 s to 2 min. A flywheel energy storage (FES) is a device that can store and release energy in the form of rotational kinetic energy. A FES consists of a rotating mass, a motor-generator, a power converter, and a controller that can be regulated by a speed or torque control. The rotor serves as a one-piece storage device, motor, and generator.

To store energy, the rotor is spun up to speed as a motor. When energy is needed, the rotor and armature act as a generator. As the rotor slows when energy is extracted, the control system automatically increases the field to compensate for the decreased voltage. Designs with steel rotors may spin at approximately 10,000 rpm, while those with composite rotors may spin at much higher speeds. Since the amount of energy stored is proportional to the square of the speed, a great amount of energy can be stored in a small space.

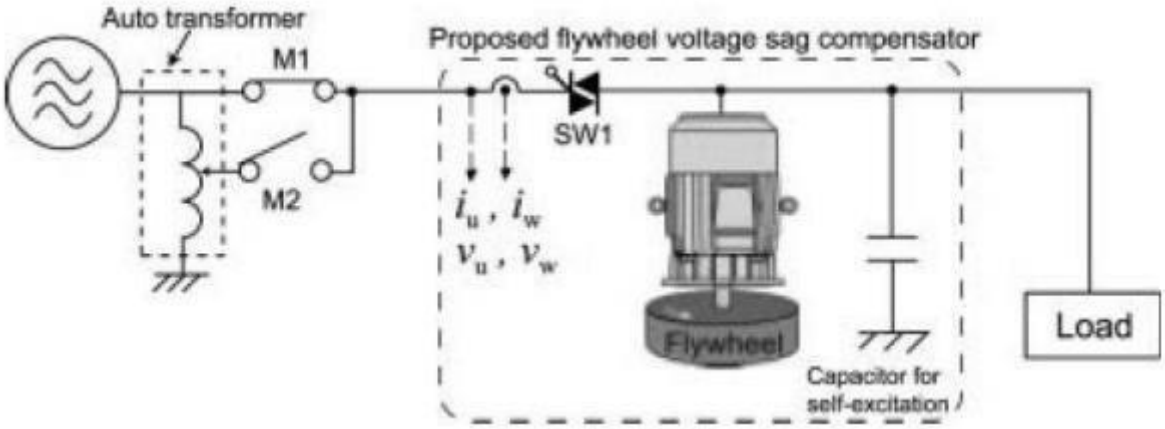

9. Superconducting Magnetic Energy Storage (SMES) devices:

An SMES device can be used to alleviate voltage sags and brief interruptions. The energy storage in an SMES-based system is provided by the electric energy stored in the current flowing in a superconducting magnet. Since the coil is lossless, the energy can be released almost instantaneously. Through voltage regulator and inverter banks, this energy can be injected into the protected electrical system in less than 1 cycle to compensate for the missing voltage during a voltage sag event.

The SMES-based system has several advantages over battery-based UPS systems:

1. SMES-based systems have a much smaller footprint than batteries for the same energy storage and power delivery capability.

2. The stored energy can be delivered to the protected system more quickly.

3. The SMES system has virtually unlimited discharge and charge duty cycles. The discharge and recharge cycles can be performed thousands of times without any degradation to the superconducting magnet. The recharge cycle is typically less than 90 s from full discharge.

Below figure shows the functional block diagram of a common system. It consists of a superconducting magnet, voltage regulators, capacitor banks, a dc-to-dc converter, dc

breakers, inverter modules, sensing and control equipment, and a series-injection transformer. The superconducting magnet is constructed of a niobium titanium (NbTi) conductor and is cooled to approximately 4.2 kelvin (K) by liquid helium. The cryogenic refrigeration system is based on a two-stage recondenser. The magnet electrical leads use high-temperature superconductor (HTS) connections to the voltage regulator and controls. The magnet might typically store about 3 megajoules (MJ).

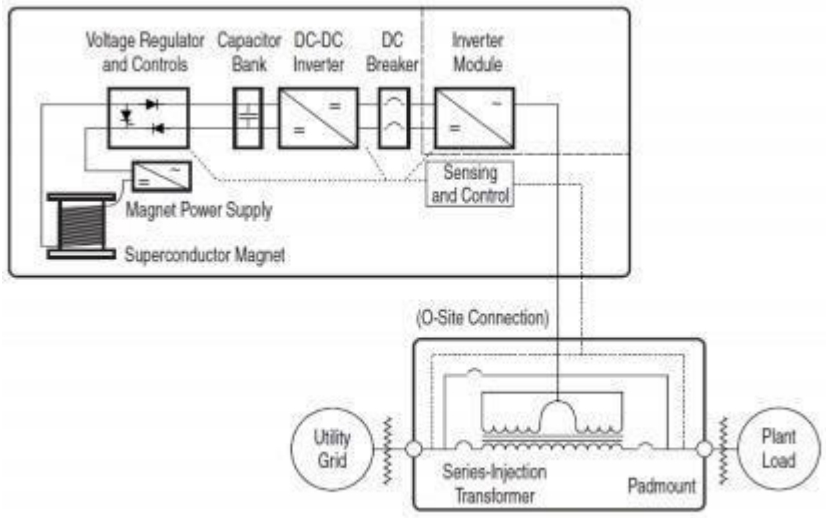

Typical power quality–voltage regulator (PQ-VR) functional block diagram.

In the example system shown, energy released from the SMES passes through a current to voltage converter to charge a 14-microfarad (mF) dc capacitor bank to 2500 Vdc. The voltage regulator keeps the dc voltage at its nominal value and also provides protection control to the SMES. The dc-to-dc converter reduces the dc voltage down to 750 Vdc. The inverter subsystem module consists of six single-phase inverter bridges. Two IGBT inverter bridges rated 450 amperes (A) rms are paralleled in each phase to provide a total rating of 900 Aper phase. The switching scheme for the inverter is based on the pulse-width modulation (PWM) approach where the carrier signal is a sine-triangle with a frequency of 4 kHz.

A typical SMES system can protect loads of up to 8 MVA for voltage sags as low as 0.25

pu. It can provide up to 10 s of voltage sag ride-through depending on load size. Below figure shows an example where the grid voltage experiences a voltage sag of 0.6 pu for approximately 7 cycles. The voltage at the protected load remains virtually unchanged at its prefault value.

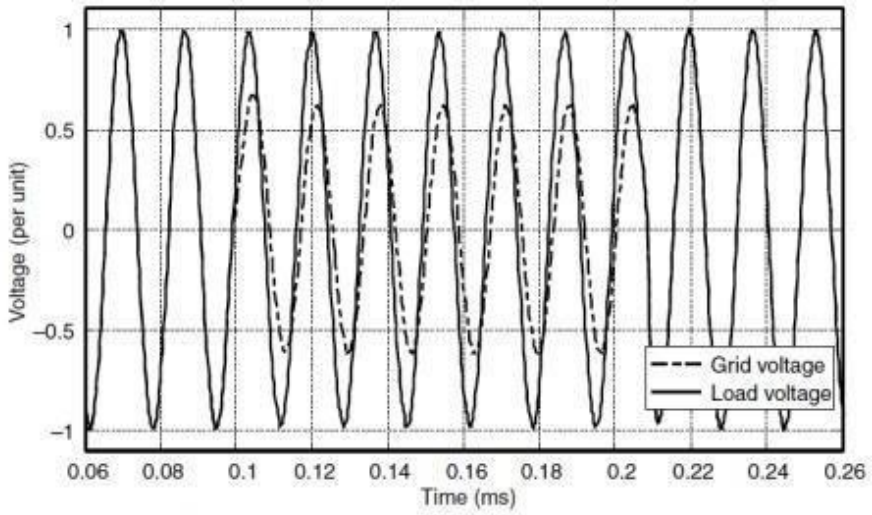

SMES-based system providing ride-through during voltage sag event.

10. Static transfer switches and fast transfer switches:

There are a number of alternatives for protection of an entire facility that may be sensitive to voltage sags. These include

1. Dynamic Voltage Restorers (DVRs)
2. Static VAR compensation
3. Solid-State Transfer Switch (SSTR)

Dynamic Voltage Restorers (DVRs):

- A dynamic voltage restorer (DVR) is a device that can inject a voltage in series with the supply voltage to compensate for voltage sag or swell.

- A DVR consists of a voltage source converter (VSC), an energy storage system (ESS), and a series transformer that can be controlled by a pulse-width modulation (PWM) technique.
- A DVR can mitigate voltage sag by generating a voltage that is equal and opposite to the voltage deviation, thereby restoring the load voltage to its nominal value.
- However, a DVR must be carefully coordinated with the protection system and the fault clearance time to avoid overcurrent or overvoltage problems.
- A DVR can also be integrated with other devices, such as shunt compensators, uninterruptible power supplies (UPS), or active filters, to improve its efficiency and versatility.

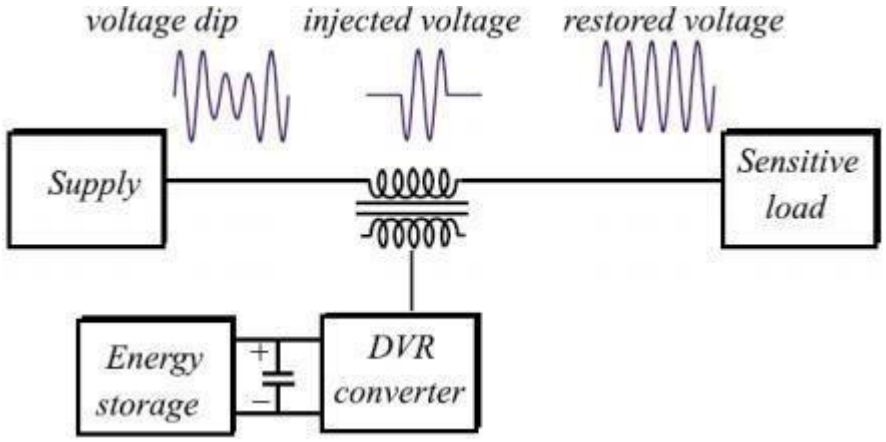

Static Var Compensator:

- A static Var compensator (SVC) is a device that can dynamically adjust the reactive power output of a power system, thereby regulating the voltage level and improving the power factor.
- SVC consists of a combination of capacitors, inductors, and thyristor-controlled switches that can be switched on and off to inject or absorb reactive power as needed.

- SVC can mitigate voltage sag by providing fast and flexible reactive power support to the system, especially during fault conditions or load variations.
- However, an SVC must be properly sized and placed to avoid overvoltage, resonance, or harmonic distortion issues. An SVC can also be combined with other devices, such as filters, transformers, or series compensators, to enhance its performance and functionality.

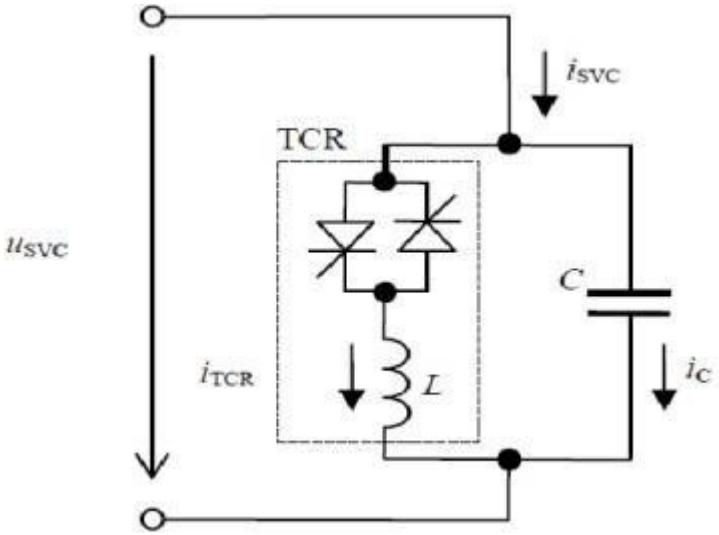

Solid-State Transfer Switch (SSTR):

- A solid-state transfer switch (SSTS) is a device that can rapidly transfer a load from one source to another in the event of a voltage sag or interruption.
- A SSTS consists of a bidirectional switch, a controller, and a bypass switch that can be triggered by a voltage or current sensor.
- A SSTS can mitigate voltage sag by switching the load to an alternative source, such as a backup generator, a UPS, or a microgrid, within a few milliseconds, thereby maintaining the continuity and quality of the load supply.

- However, SSTS must be properly synchronized and isolated to avoid transient or harmonics issues.
- A SSTS can also be integrated with other devices, such as voltage regulators, power conditioners, or fault current limiters, to optimize its performance and reliability.

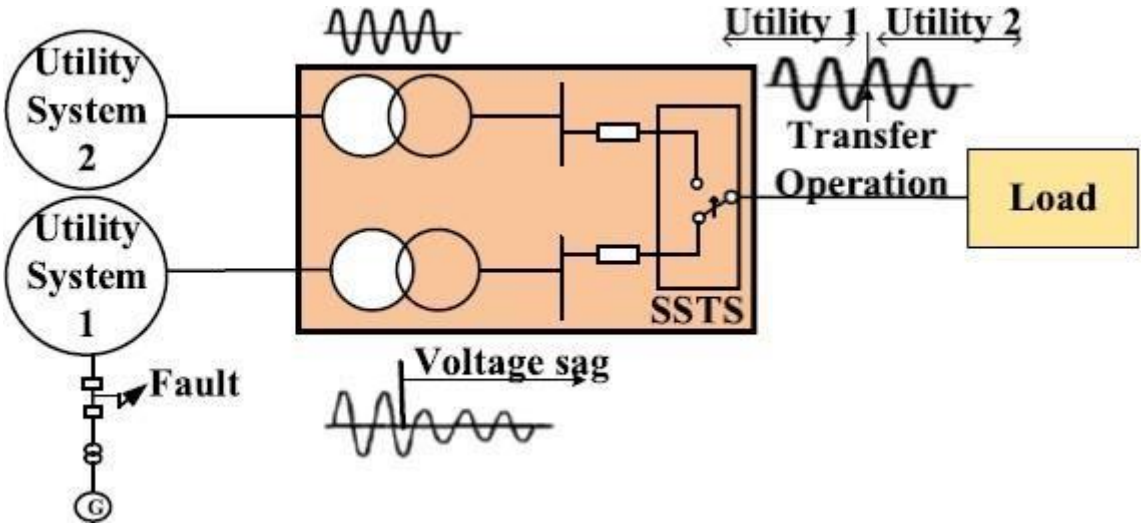

Department of Electrical & Electronics Engineering

IV B.Tech I Semester

POWER QUALITY (23A027HT)

(Electrical and Electronics Engineering)

Unit-III (Fundamentals of Harmonics)

Syllabus:

Harmonic distortion, voltage versus current distortion, harmonics versus transients, power system quantities under non-sinusoidal conditions, harmonic indices. Harmonic sources from commercial and industrial loads. Effects of harmonic distortion. Applied harmonics - harmonic distortion evaluation, principles of controlling harmonics, and devices for controlling harmonic distortion. Harmonic filter design and standards on harmonics.

Department of Electrical & Electronics Engineering

IV B.Tech I Semester

POWER QUALITY (23A027HT)

Unit-III (Fundamentals of Harmonics)

3.1 Harmonic Distortion

- Nonlinear devices in the power system are the source of harmonic distortion.
- A nonlinear device is one in which the current is not proportional to the applied voltage.

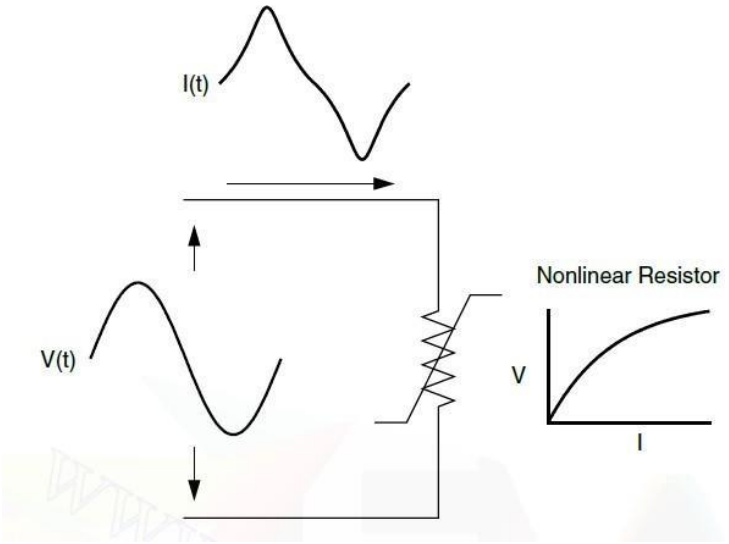

Fig.3.1 Current distortion caused by nonlinear resistance

- The Fig 3.1 explains the concept of harmonic distortion by using the example of a sinusoidal voltage applied to a nonlinear resistor, where the relation between the voltage and current changes according to the curve.
- Even though the applied voltage is pure sinusoidal, but the current is not. A little percentage increase in voltage may cause the current to double and change in

- Harmonic can be defined as a sum of pure sine waves in which the frequency of each sinusoid is an integer multiple of fundamental frequency.
- The sum of sinusoids is referred to as a Fourier series; this concept is universally applied in analyzing harmonic problems.

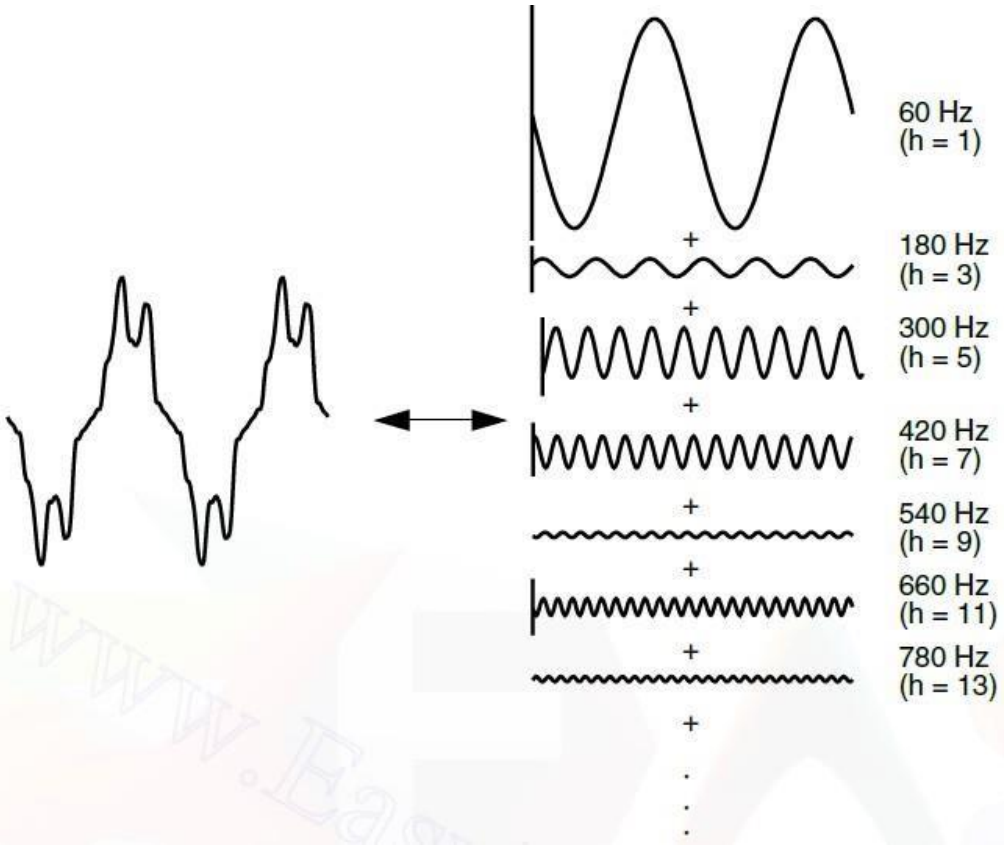

Fig.3.2 Fourier series representation of a distorted waveform

- The Fig 3.2illustrates any periodic, distorted waveform can be expressed as the sum of sinusoids.
- Only odd harmonics are present in the Fourier series when a waveform's positive and negative half cycles have identical shapes.
- Majority of the harmonic producing devices appear the same to both polarities.

- The existence of **even harmonics** frequently indicates that there is a problem with the **load apparatus** or the **transducer** being utilized for the measurement.
- Higher-order harmonics, which fall between the 25th and 50th harmonics depending on the system, are negligible for power system analysis.
- Although they might interfere with low-power electronic equipment, they typically don't harm the power system. It is also difficult to collect sufficiently accurate data to model power systems at these frequencies.
- Notching or switching transients in electronic power converters can cause resonance in the system.
- These resonances generally occur on systems with underground cable but no power factor correction capacitors.
- The power system is represented as series and shunt elements, the vast majority of the nonlinearities in the system are found in shunt elements (i.e., loads).
- In transformers, also, the source of harmonics is the shunt branch (magnetizing impedance) of the common "T" model.
- Thus, the main sources of harmonic distortion will ultimately be end-user loads.

3.2 Voltage versus Current Distortion

- An induction furnace or adjustable-speed drive cannot work properly due to one of the following reason:
  - Due to high harmonic voltages, the control system cannot accurately detect firing angles.
  - Due to high harmonic currents, components of power supply system such as transformers, machines must be operated at a lower than rated power.

- Harmonic currents produced by the device are too great for the system condition, which causes excessive harmonic voltages.

- Shunt connected nonlinear loads appears to be sources of harmonics, injecting harmonic currents into the power system.
- These harmonic-producing loads can be treated as simple current sources for almost all analyses.

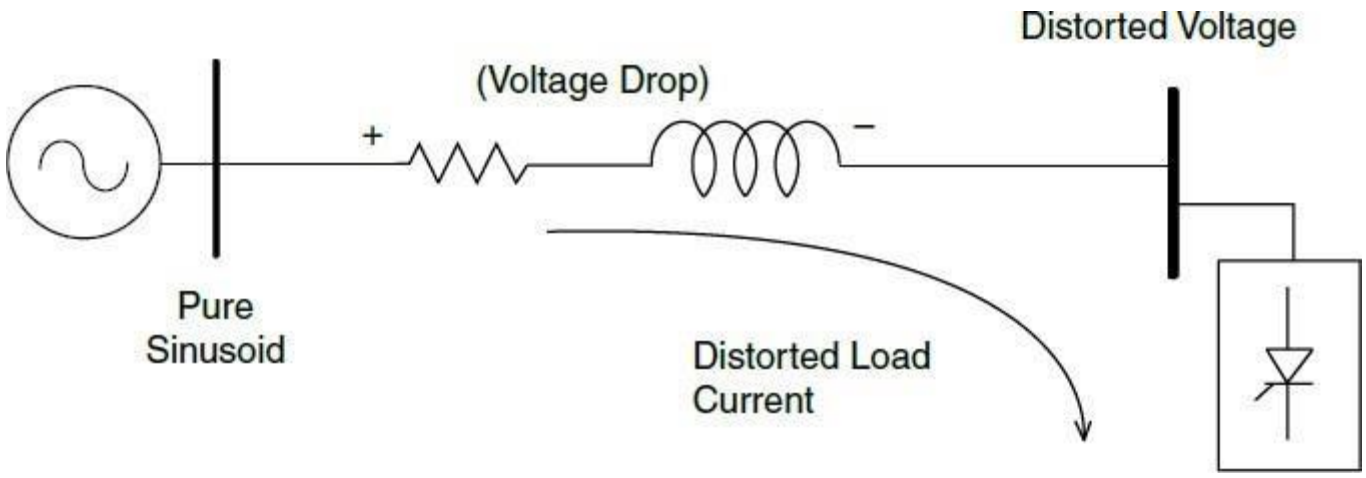

Fig.3.3 Harmonic currents flowing through the system impedance result inharmonic voltages at the load.

- The Fig.3.3 shows voltage distortion due to the distorted current passing through linear, series impedance of the power delivery system.
- However, a nonlinear load draws distorted current if the source bus is even a pure sinusoid.
- The harmonic currents passing through the impedance of the system cause a voltage drop for each harmonic.

- These harmonic currents results in voltage harmonics appearing at the load bus.
- The amount of voltage distortion depends on the impedance and the current.
- Assuming the load bus distortion stays within reasonable limits (e.g., <5 percent), the amount of harmonic current produced by the load is generally constant.
- It should be remembered that the load has no control over the voltage distortion, even though the load current harmonics ultimately cause the voltage distortion.
- The voltage distortion values will vary when the same load is applied at two distinct locations on the power system.
- EEE Standard 519-1992, Recommended Practices and Requirements for Harmonic Control in Electrical Power Systems, outline the allocation of duties for harmonic control.
  - At the end-use application, there is control over the amount of harmonic current is injected into the system.
  - Assume that the harmonic current injection is within the limits, the control over the voltage distortion can be done by controlling the system impedance.

3.3 Harmonics versus Transients

Harmonics	Transients
Harmonics arise in steady state or for several seconds and are not related to the switching process.	High frequencies can be observed in transient waveforms, which are produced during the switching process.

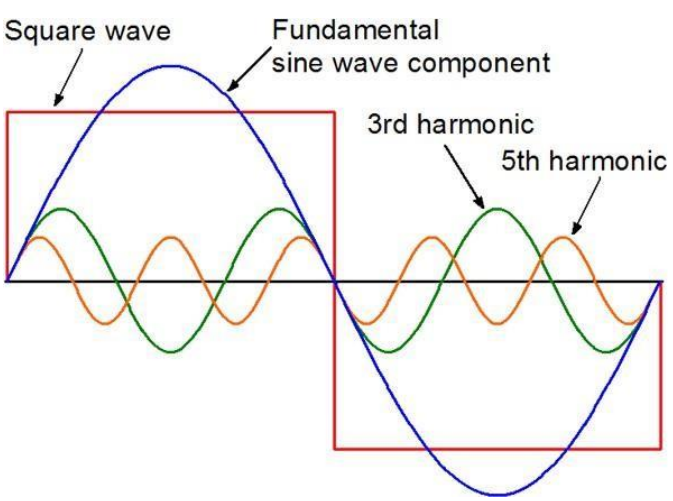	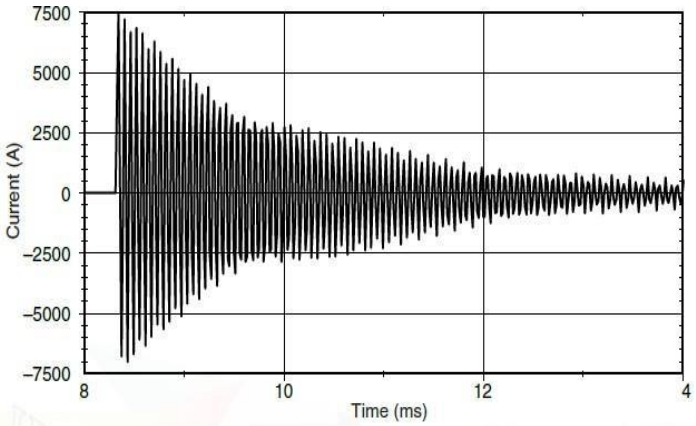 Oscillatory transient current caused by back-to-back capacitor switching.
Harmonics are integer multiples of the fundamental frequency.	Transient are the natural frequency of the system and are not related to the fundamental frequency.
Harmonics are not dissipated.	Transients are usually dissipated.
Harmonics are associated with the continuing operation of a load.	Transients are associated with changes in the system such as switching of a capacitor bank.
Harmonics are periodic	Transients are not periodic

3.4 Power System Quantities under Non-sinusoidal Conditions

Introduction:

- Traditional power system quantities such as r.m.s, power (reactive, active, apparent), power factor, and phase sequences are defined for the fundamental frequency context in a pure sinusoidal condition.
- The power system no longer functions in a sinusoidal condition in the presence of harmonic distortion.

- Many of the simplifications power engineers utilize for the basic frequency analysis are no longer valid.

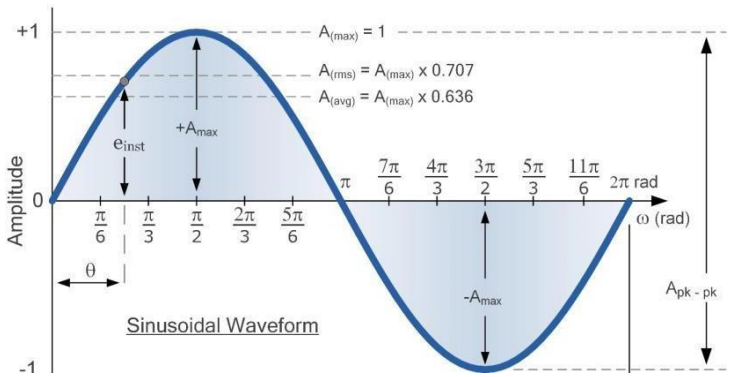

Fig.3.4 (a) Sinusoidal Waveform

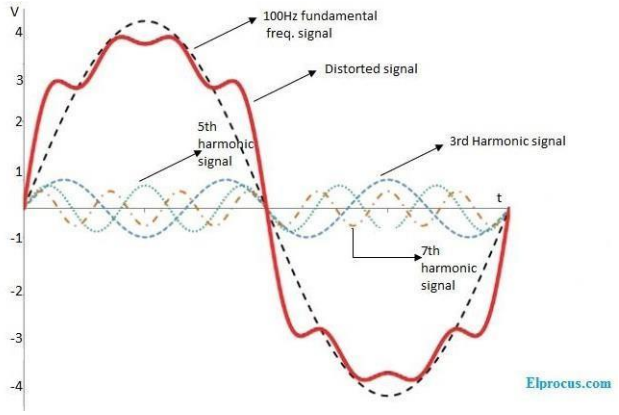

Fig.3.4 (b) Distorted Waveform

3.4.1 Apparent Power, S (Volt-ampere (VA))

Definition: The product of the r.m.s voltage and current.

Under Sinusoidal Conditions:

The apparent power can be written as follows:

$$S = V_{r.m.s} \, x I_{r.m.s}$$

Where $V_{r.m.s}$ and $I_{r.m.s}$ are the r.m.s values of the voltage and current.

- In a sinusoidal condition both the voltage and current waveforms contain only the fundamental frequency component.
- The r.m.s values can be expressed as

$$V_{r.m.s} = \frac{1}{\sqrt{2}} V_1 \text{ and } I_{r.m.s} = \frac{1}{\sqrt{2}} I_1$$

Under Non-Sinusoidal Conditions:

The apparent power can be written as follows:

$$S = V_{r.m.s} \, x I_{r.m.s}$$

Where $V_{r.m.s}$ and $I_{r.m.s}$ are the r.m.s values of the voltage and current.

- In a non-sinusoidal condition a harmonically distorted waveform is made up of sinusoids of harmonic frequencies with different amplitudes.
- The r.m.s values of the waveforms are computed as the square root of the sum of r.m.s squares of all individual components.
- The r.m.s values can be expressed as

$$V_{r.m.s} = \sqrt{\sum_{h=1}^{h_{max}} \left(\frac{1}{\sqrt{2}} V_h\right)^2} = \frac{1}{\sqrt{2}} \sqrt{V_1^2 + V_2^2 + V_3 + \cdots \ldots + V_{hmax}^2}$$

$$I_{r.m.s} = \sqrt{\sum_{h=1}^{h_{max}} \left(\frac{1}{\sqrt{2}} I_h\right)^2} = \frac{1}{\sqrt{2}} \sqrt{I_1^2 + I_2^2 + I_3^2 + \cdots \ldots + I_{hmax}^2}$$

Where V_h and I_h are the amplitude of a waveform at the harmonic component h.

- In Sinusoidal condition, harmonic component of V_h and I_h are all Zero, only V_1 and I_1 exists.

3.4.2 Active Power, P (Watts (W)

- The active power P is also commonly referred to as the average power, real power, or true power.
- It represents the amount of useful power loads use to accomplish actual work, such as converting electric energy into other forms of energy.
- For Ex: Real work utilized by an incandescent light bulb is to convert electric energy into light and heat.

- The rate at which energy is used, dissipated, or consumed by the load is known as the active power, and it is expressed in watts.
- **P** can be calculated by averaging the product of the instantaneous voltage and current, i.e.

$$P = \frac{1}{T}\int_0^T V(t)i(t)dt$$

Under Sinusoidal Conditions:

The active power P can be written as

$$P = \frac{V_1 I_1}{2}\cos\theta_1 = V_{1r.m.s}\, I_{1r.m.s}\cos\theta_1 = S\cos\theta_1$$

Where θ_1 is the phase angle between voltage and current at the fundamental frequency.

Under Non-Sinusoidal Conditions:

- Since all harmonic components must be included in the computation of the active power in the non-sinusoidal situation.
- The active power is the sum of the active power at each harmonic.
- Since voltage distortion is generally very low on power systems (< 5% percent), active power due to harmonics are neglected.
- The active power **P** can be written as

$$P = \frac{V_1 I_1}{2}\cos\theta_1 = V_{1r.m.s}\, I_{1r.m.s}\cos\theta_1 = S\cos\theta_1$$

3.4.3 Reactive Power, Q (Var)

- Reactive power is a kind of power that isn't very useful and is typically associated with reactive elements (inductors and capacitors).

- It is also called as imaginary power since no power is dissipated or expended. It is expressed in units of vars.

Under Sinusoidal Conditions:

- Reactive power can be written as

$$Q = S\sin\theta_1 = \frac{V_1 I_1}{2}\sin\theta_1 = V_{1r.m.s}\, I_{1r.m.s}\sin\theta_1$$

Under Non-Sinusoidal Conditions:

- The reactive power when distortion is present has another interesting distinctive characteristic.
- In calculating the reactive power, the reactive power due to harmonics must be added.
- Some analysts to propose that Q be used to denote the reactive components that are conserved and introduce a new quantity.
- Many call this quantity **D**, for distortion power or, simply, distortion volt-amperes. It has units of volt-amperes.

$$S = \sqrt{P^2 + Q^2 + D^2}$$

- Therefore, D can be determined after S, P, and Q by

$$D = \sqrt{S^2 - P^2 - Q^2}$$

3.4.4 Power Factor, Q (Var)

- Power factor (PF) is a ratio of useful power to perform real work (active power) to the power supplied by a utility (apparent power), i.e.,

$$\boldsymbol{PF = \frac{P}{S}}$$

- The percentage of power used for its intended purpose is measured by the power factor ratio.
- Power factor ranges from zero to unity.
- When a load has a power factor of 0.9 lagging, it means that it can efficiently use 90% of the Apparent power (volt-amperes) given and convert it into useful work (watts).

Under Sinusoidal Conditions:

- In the sinusoidal case there is only one phase angle between the voltage and the current (since only the fundamental frequency is present).
- The power factor may be calculated as the cosine of the phase angle and is frequently referred to as the **displacement power factor**.

$$PF = \frac{P}{S} = cos\theta$$

Under Non-Sinusoidal Conditions:

- In the Non-sinusoidal case, the power factor cannot be defined as the cosine of the phase angle.
- The power factor that takes into account the contribution from all active power, **including both fundamental and harmonic frequencies, is known as the true power factor.**
- The true power factor is simply the ratio of total active power for all frequencies to the apparent power delivered by the utility.
- SMPS and PWM adjustable-speed drives have a near unity displacement power factor, but the true power factor may be 0.5 to 0.6

3.4.5 Harmonic Phase Sequences

- Symmetrical components have long been utilized by power engineers to explain the behavior of three-phase systems.
- While analyzing the system response to harmonic currents using symmetrical components, care is taken not to violate the fundamental assumptions.
- The positive sequence set contains three sinusoids displaced 120° from each other, with the normal A-B-C phase rotation. (eg., 0°, -120°, -240°)
- The sinusoids of negative sequence set are also displaced by 120°, but have opposite phase rotation (A-C-B, e.g.., 0°, -240°, +120°)
- The sinusoids of the zero sequence are in phase with each other (e.g., 0°, 0°, 0°)

Fundamental	**A** 0°	**B** 120°	**C** 240°	**A-B-C**
3rd harmonic	**A'** 3 x 0° (0°)	**B'** 3 x 120° (360° = 0°)	**C'** 3 x 240° (720° = 0°)	*no rotation*
5th harmonic	**A"** 5 x 0° (0°)	**B"** 5 x 120° (600° - 720° - 120°) (-120°)	**C"** 5 x 240° (1200° - 1440° - 240°) (-240°)	**C-B-A**
7th harmonic	**A"'** 7 x 0° (0°)	**B"'** 7 x 120° (840° - 720° + 120°) (120°)	**C"'** 7 x 240° (1680° - 1440° + 240°) (240°)	**A-B-C**
9th harmonic	**A""** 9 x 0° (0°)	**B""** 9 x 120° (1080° = 0°)	**C""** 9 x 240° (2160° = 0°)	*no rotation*

- The harmonic phase sequence of a perfectly balanced three-phase system can be determined by multiplying the harmonic number h by the normal positive-sequence phase rotation.
- For example, for the third harmonic, h=3,

  We get 3 x (0°, -120°, -240°) or (0°, 0°, 0°), which is the zero sequence.
- Positive sequence harmonics are those, like the 7th, that "rotate" with the fundamental.
- Negative sequence harmonics are those, like the fifth, that "rotate" in the opposite order of the fundamental.
- Zero sequence refers to the triplen harmonics (3rdand 9thin this table), which are in phase with each other and so don't "rotate" at all.

Rotation sequences according to harmonic number

+	1st	7th	13th	19th	← Rotates with fundamental
0	3rd	9th	15th	21st	← Does not rotate
-	5th	11th	17th	23rd	← Rotates against fundamental

3.4.5 Triplen Harmonics

- Triplen harmonics are the odd multiples of the third harmonic (h = 3, 9, 15, 21, . . .)
- Triplens become an important issue for grounded-wye systems with current flowing on the neutral.
- Overloading the neutral and telephone interference are two common issues generally system faces due to triplen harmonics.

- Sometimes the devices that may malfunction due to severe distortion of the line-to-neutral voltage caused by the triplen harmonic voltage drop in the neutral conductor.

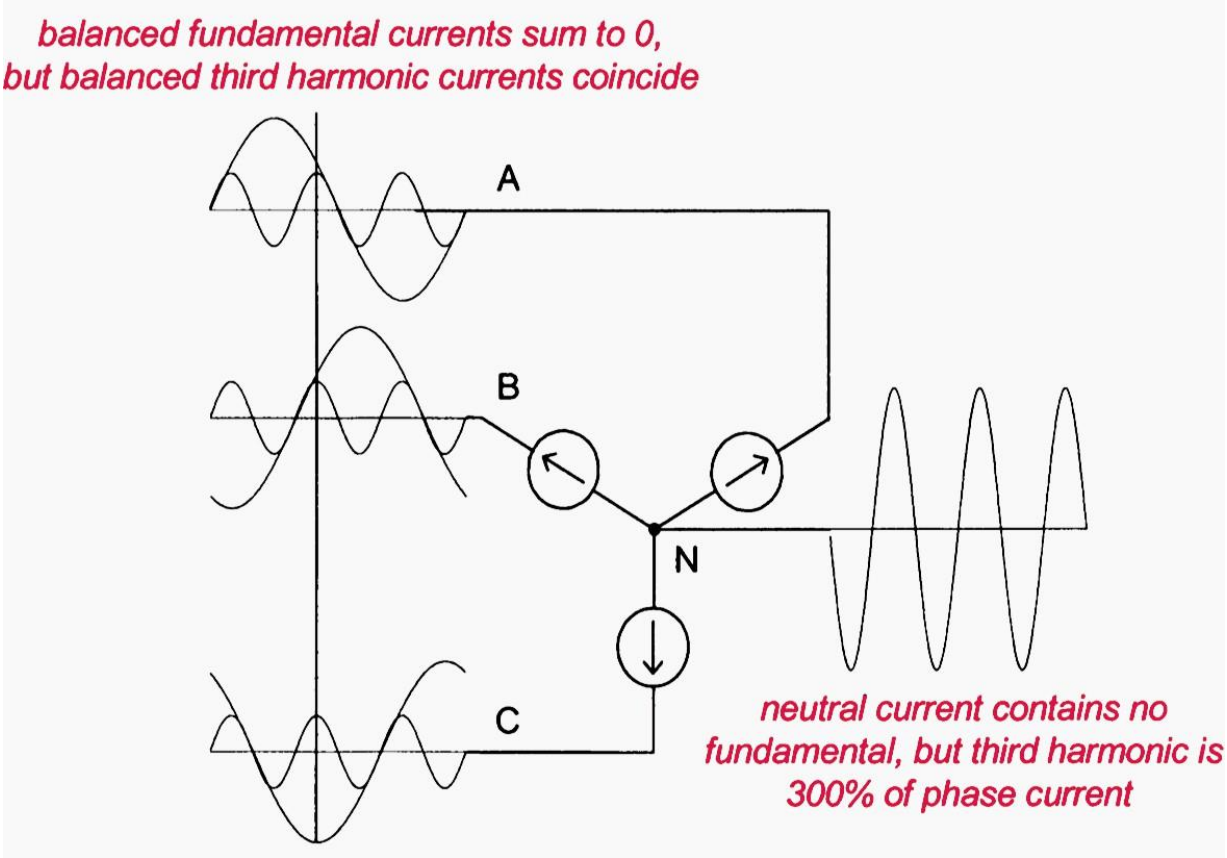

Fig.3.5 System with perfectly balanced single phase loads

- An assumption is made that fundamental and third-harmonic components are present.
- Summing the currents at node N, the fundamental current components in the neutral are found to be zero, but the third-harmonic components are 3 times those of the phase currents.

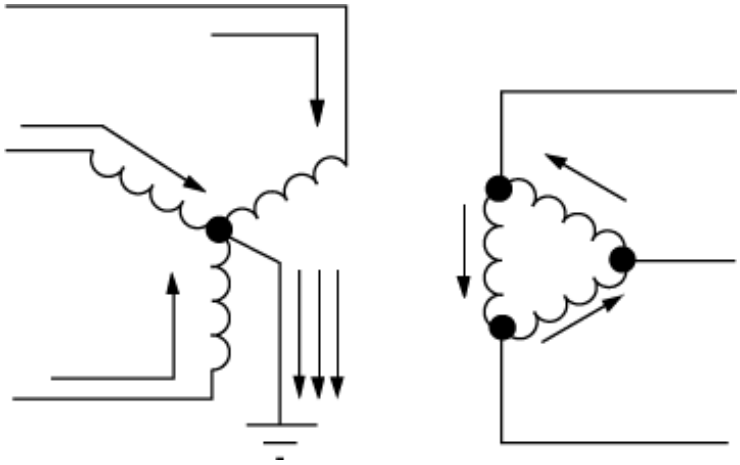

Fig.3.6Flow of third harmonic current in three phase transformer (Y-Δ)

- Transformer winding connections have a significant impact on the flow of triplen harmonic currents from single-phase nonlinear loads.
- In the wye-delta transformer, shown in figure 3.6, the triplen harmonic currents are shown entering the wye side. Since they are in phase, they add in the neutral.
- The delta winding provides ampere-turn balance, allowing them to flow, but they remain trapped in the delta and are not visible in line currents on the delta side.

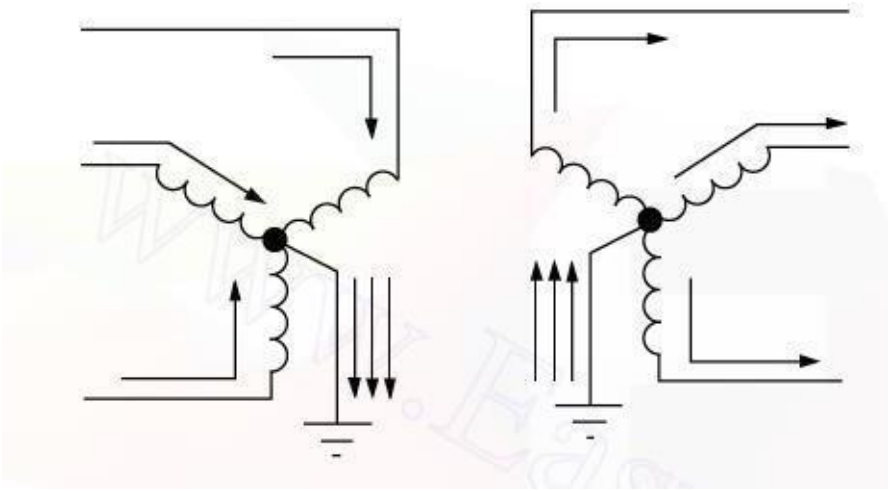

Fig.3.7 Flow of third harmonic current in three phase transformer (Y-Y)

- The figure 3.7 shows flow of third harmonic current in three phase transformer (Y-Y).
- Using grounded-wye windings on both sides of the transformer permits balanced triplens to flow from low-voltage to high-voltage systems without interruption.
- Removing the neutral connection in one or both wye windings blocks the flow of triplen harmonic current.
- During imbalances, triplen harmonics may have positive or negative sequence components.

3.5 Harmonic Indices

- Harmonic indices are measures for analyzing and quantifying the existence and influence of harmonics in electrical signals, especially in power systems.
- Waveform harmonic content is often measured using two indices:
  - Total harmonic distortion (THD)
  - Total demand distortion (TDD)
- The effective value of a waveform can be measured using both voltage and current.

3.5.1 Total Harmonic Distortion (THD)

- THD measures the effective value of harmonic components in a distorted waveform.
- THD refers to the heating potential of harmonics in comparison to the fundamental. This index can be determined for voltage or current.
- The THD index is mostly used to describe voltage harmonic distortion.

$$\mathrm{THD} = \frac{\sqrt{\sum_{h>1}^{hmax} M_h^{\,2}}}{M_1}$$

Where M_h is the r.m.s value of harmonic component h of the quantity M.

The THD is related to the r.m.s value of the waveform as follows:

$$\text{RMS} = \frac{\sqrt{\sum_{h>1}^{hmax} M_h^2}}{M_1} = M_1\sqrt{1 + THD^2}$$

- THD can give an accurate estimate of how much more heat will be generated when a distorted voltage is applied across a resistive load.

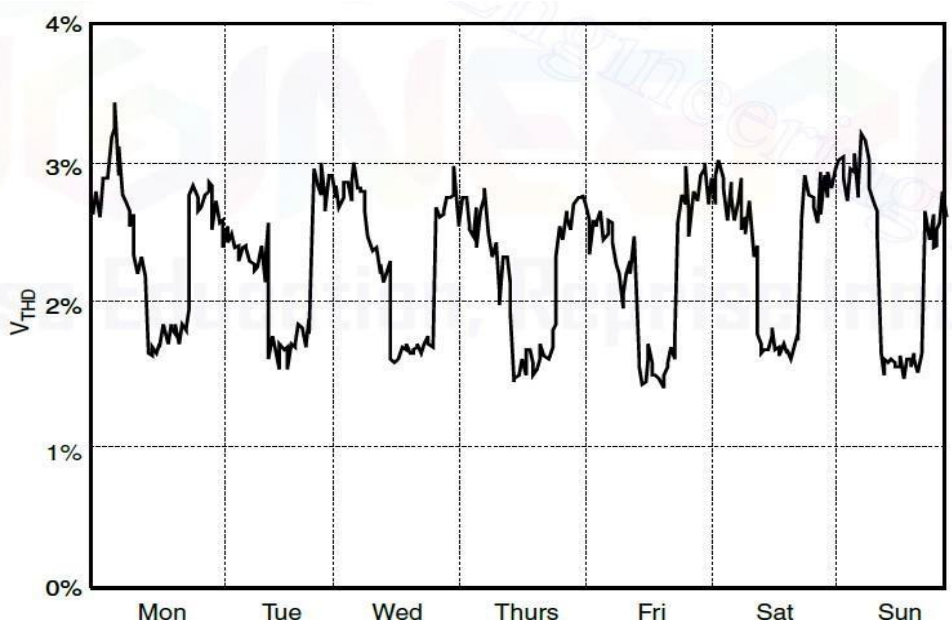

Fig.3.8 Voltage THD at 13.2kV distribution substation supplying a residential load

- High-voltage THD arises during night and early morning hours due to higher nonlinear loads than linear loads.

3.5.2 Total Demand Distortion (TDD)

- TDD is defined as the square root of the sum of the squares of the r.m.s value of the currents from 2nd harmonic current to the highest harmonic divided by the peak demand load current and is expressed as a percent.
- As per the guidelines in IEEE Standard 519-1992, Recommended Practices and Requirements for Harmonic Control in Electrical Power Systems. It is defined as follows:

$$TDD = \frac{\sqrt{\sum_{h=2}^{hmax} I_h{}^2}}{I_L}$$

- A small current may have a high THD but not be a significant threat to the system.
- For example, many adjustable-speed drives will exhibit high THD values for the input current when they are operating at very light loads.
- There are 2 methods to measure peak demand load current I_L
  - Average the maximum demand over the previous 12 months.
  - Estimated based on the predicted load profiles.

3.6 Harmonic Sources from Commercial and Industrial Loads

3.6.1 General sources of harmonics

- Non-linear loads such as inverter fed adjustable speed drive.
- Use of power factor correction capacitor creates parallel or series resonance problems increasing the harmonic distortion.
- Process control and solid state power conversion equipment.
- Energy efficient compact fluorescent lamps.

- Use of AC and DC adjustable speed drives.
- Static VAR compensators.
- Transformers produce very high levels of harmonics when they are initially energized, the so called inrush current will generate harmonics of several orders.
- AC Voltage regulators, Battery chargers etc.

3.6.2 Harmonic sources from commercial loads

- Office complexes, Departmental stores, Hospitals, Internet data centers uses High Efficiency Fluorescent Lighting with electronic ballasts.
- The supply to adjustable speed drives used for heating, ventilation, air conditioning loads, elevator drives, sensitive electronic equipment etc., is provided by single phase switched mode power supply (SMPS).
- Commercial loads have a large number of small harmonic producing loads.
- Voltage distortion levels depends on circuit impedance and overall harmonic current distortion.
- Since Power factor correction capacitors are not typically used in commercial facilities, the circuit impedance is dominated by the service entrance transformers and conductor impedances.
- Voltage distortion is estimated by multiplying the current by the impedance adjusted for frequency.

3.6.2.1 Single Phase Power Supplies

- The most significant category of nonlinear loads in the power system now a days is made up of electronic power converter loads.

- Electronic power supplies are very important in commercial premises because of increased utilization of

  1) Personal computers 2) Battery chargers 3) DC motor drives

  4) Adjustable speed motor drives

  5) Electronic ballasts and many other rectifier and inverter applications

- Power Supplies for single phase electronic equipment (Ex. Computer/ Printer) will produce too much harmonic current.
- Modern electronic and microprocessor based office equipment frequently uses single phase full wave bridge rectifiers to provide DC power.
- With the expanded use of personal computers in every industry, the percentage of load that contains electronic power supply is rising dramatically.
- Two common types of single phase power supplies are available.
  - **Older Technology**
    - Uses a transformer to reduce voltage to the level required for the dc bus.
    - The inductance of the transformer provides beneficial side effect by smoothing the input current waveform and reducing harmonic content.
  - **Newer Technology**
- Uses dc-dc conversion technique to achieve a smooth dc output with small, light weight components.
- The input diode bridge is directly connected to the ac line, eliminating the transformer.

- This direct current is then converted back to alternating current at a very high frequency by the switcher and subsequently rectified again.

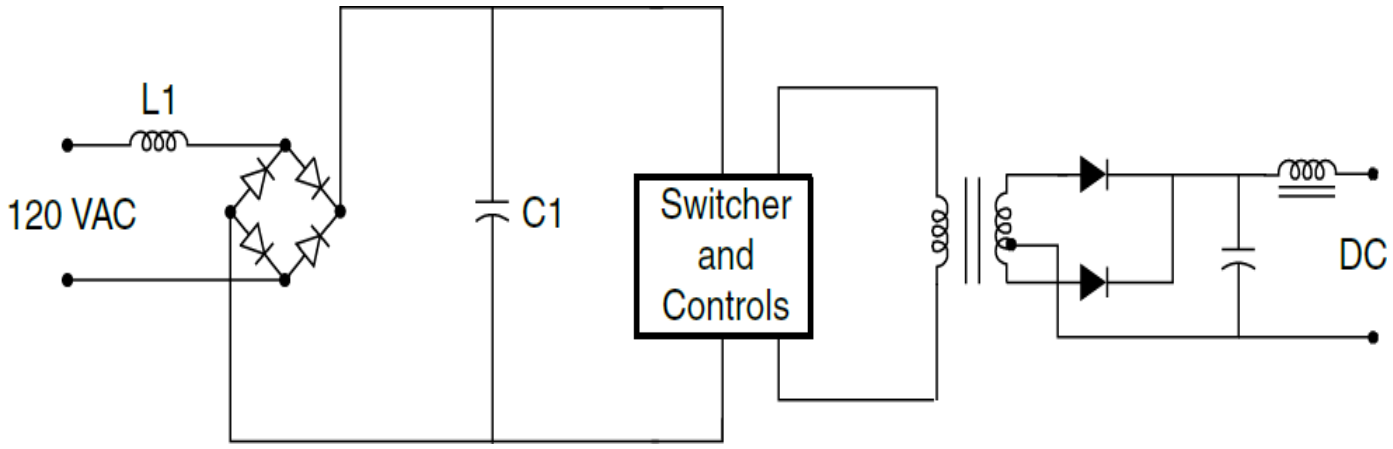

Fig. 3.9 Switch-mode power supply (SMPS)

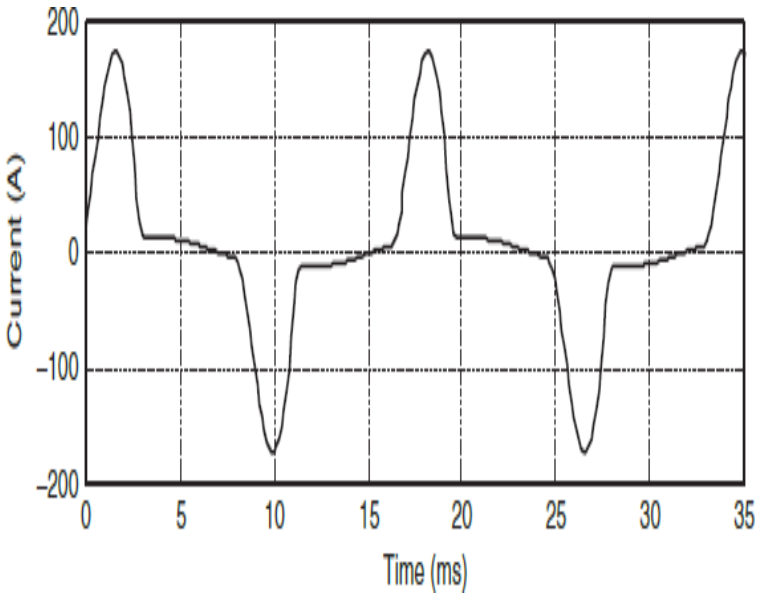

Fig. 3.10 (a) SMPS Current

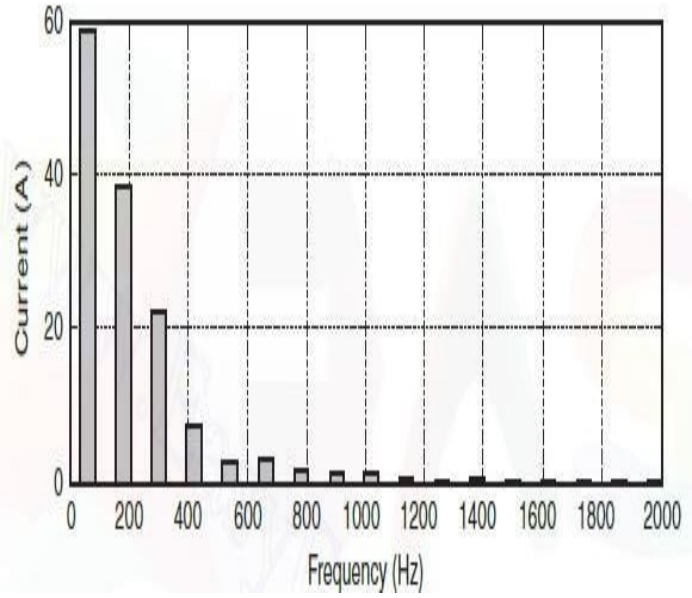

Fig. 3.10 (b) Harmonic Spectrum

- Switch-mode power supplies is a very high **third-harmonic** content in the current.
- Switch-mode power supplies causes concern **for overloading of neutral conductor**.

3.6.2.1.1 Advantages of SMPS

1) Light Weight 2) Compact Size 3) Efficient Operation 4) No need of transformer

3.6.2.1.2 Applications of SMPS

1) Personal computers 2) Printers 3) Copiers 4) Single phase electronic equipment

3.6.2.2 Fluorescent Lighting

- Commercial building loads consumes 40% to 60% of generated energy for lighting.
- As discharge lamps, fluorescent lights need a ballast to supply a high starting voltage to start the discharge so that electricity can flow between two electrodes.
- There are two types of ballasts
  - Magnetic Ballast
  - Electronic Ballast

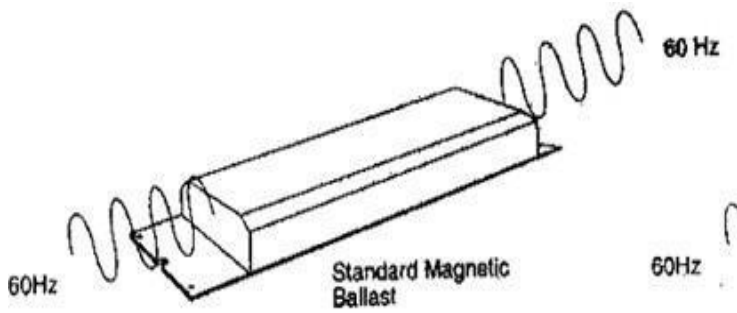

Fig. 3.11 (a) Magnetic Ballast

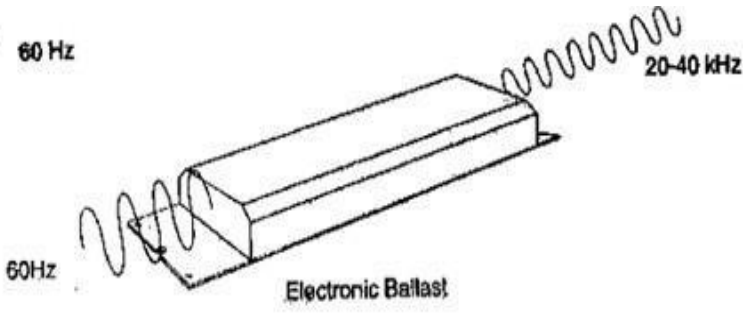

Fig. 3.11 (b) Electronic Ballast

- Single magnetic ballast can drive one or two fluorescent lamps, and it operates at the line fundamental frequency, i.e., 50 or 60 Hz.
- Electronic ballast employs a switch-mode-type power supply to convert the incoming fundamental frequency voltage to a much higher frequency voltage typically in the range of 25 to 40 kHz.

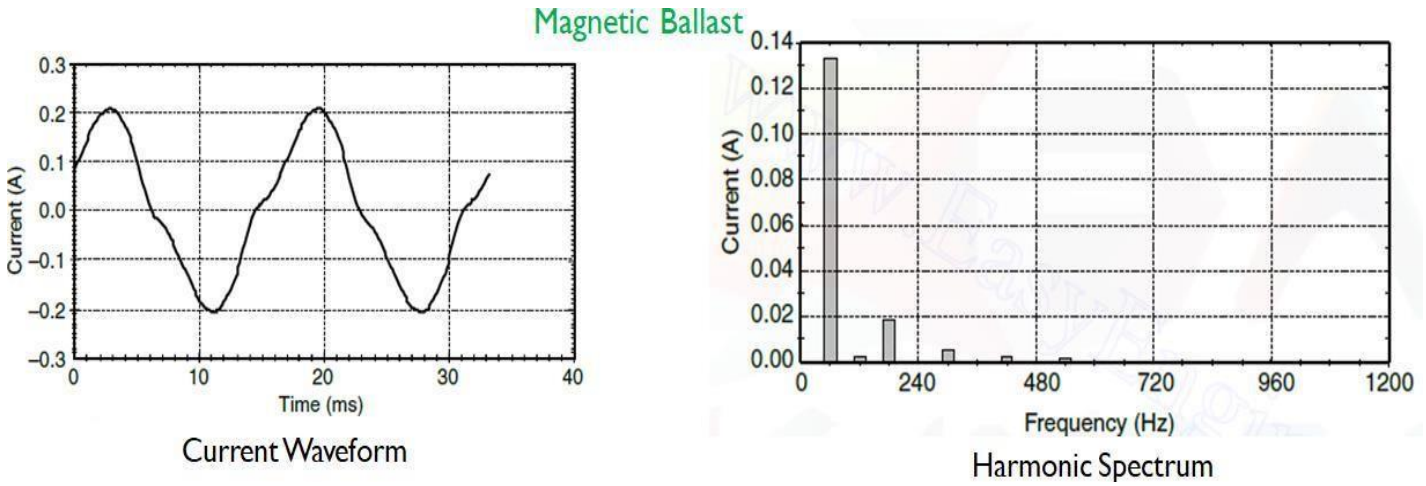

Fig. 3.12 Magnetic Ballast current waveform and harmonic spectrum

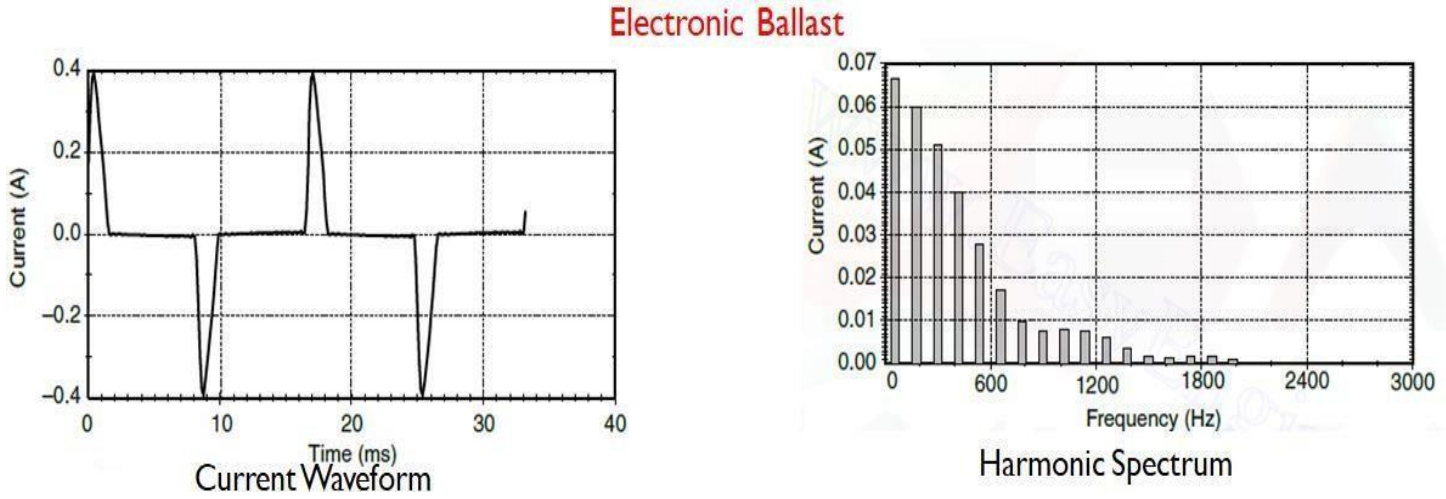

Fig. 3.13 Electronic Ballast current waveform and harmonic spectrum

3.6.2.3 Adjustable-speed drives (ASD) for HVAC and elevators

- Adjustable Speed drives are usually applied in Electric Motors, Pumps and Fans of HVAC (Heating, Ventilation and Air Conditioning) systems.
- An ASD consists of an electronic power converter that converts ac voltage and frequency into variable voltage and frequency.

- The variable voltage and frequency allows the ASD to control motor speed to match the application requirement such as slowing a pump or fan.

3.6.3 Harmonic sources from Industrial loads

- Modern industrial facilities are characterized by number of nonlinear loads.
- These loads inject harmonic currents into the power system, causing harmonic distortion in the voltage.
- The fact that these nonlinear loads have a very low power factor made worst this harmonic issue.
- Industrial establishments frequently use capacitor banks to increase the power factor in order to reduce fines.
- In fact the power factor correction capacitor will magnify harmonic currents from the nonlinear loads, giving rise to resonance conditions within the facility.
- Resonance conditions cause motor and transformer overheating, and mis operation of sensitive electronic equipment.
- Nonlinear industrial loads has been categorized into three types
  - Three-phase power converters,
  - Arcing devices, and
  - Saturable devices

3.6.3.1 Three-phase power converters

- The fundamental way that three-phase electronic power converters vary from single-phase converters is that third-harmonic currents are not produced.

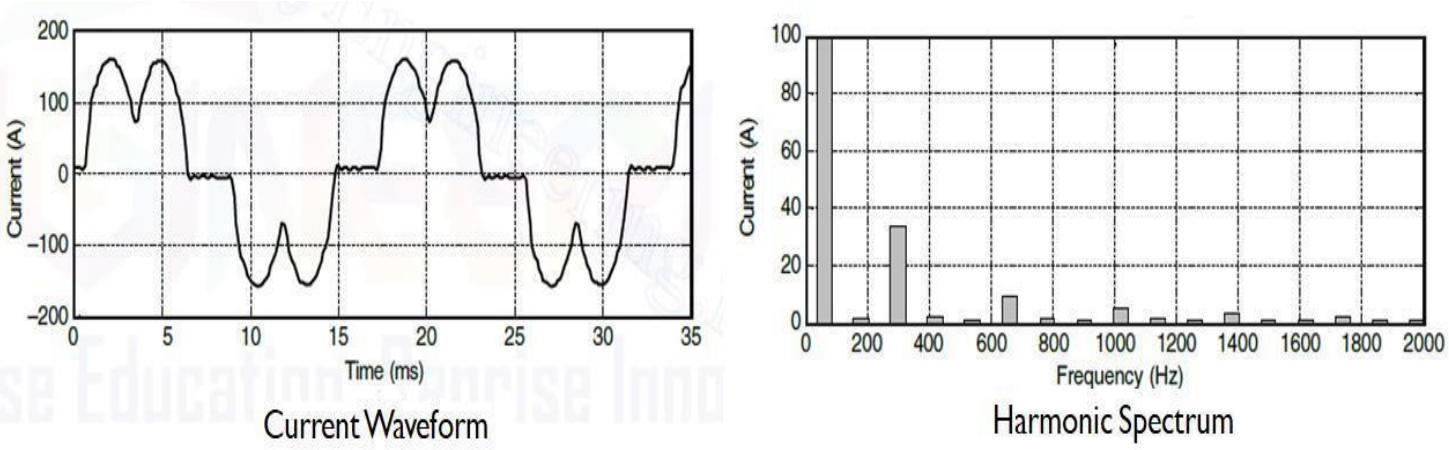

Fig. 3.14 Current and harmonic spectrum for CSI-type ASD.

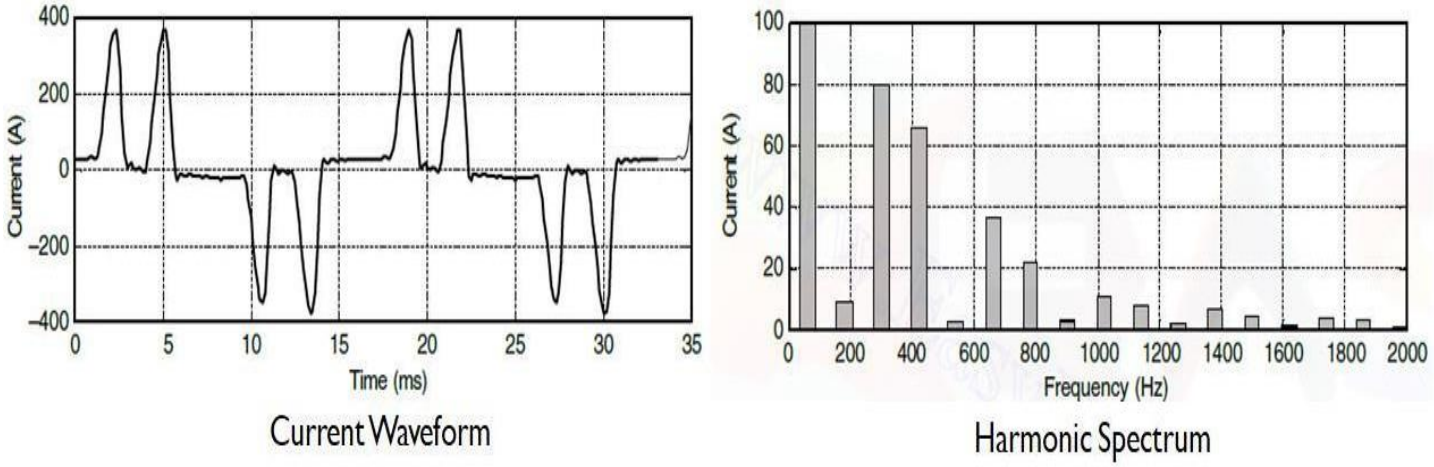

Fig. 3.15 Current and harmonic spectrum for PWM-type ASD.

3.6.3.1.1 DC Drives

- Most dc drives use the six-pulse rectifier.
- The fifth and seventh harmonic currents are the two greatest harmonic currents for the six-pulse drive.
- A 12-pulse rectifier in this application can be expected to eliminate about 90 percent of the fifth and seventh harmonics.

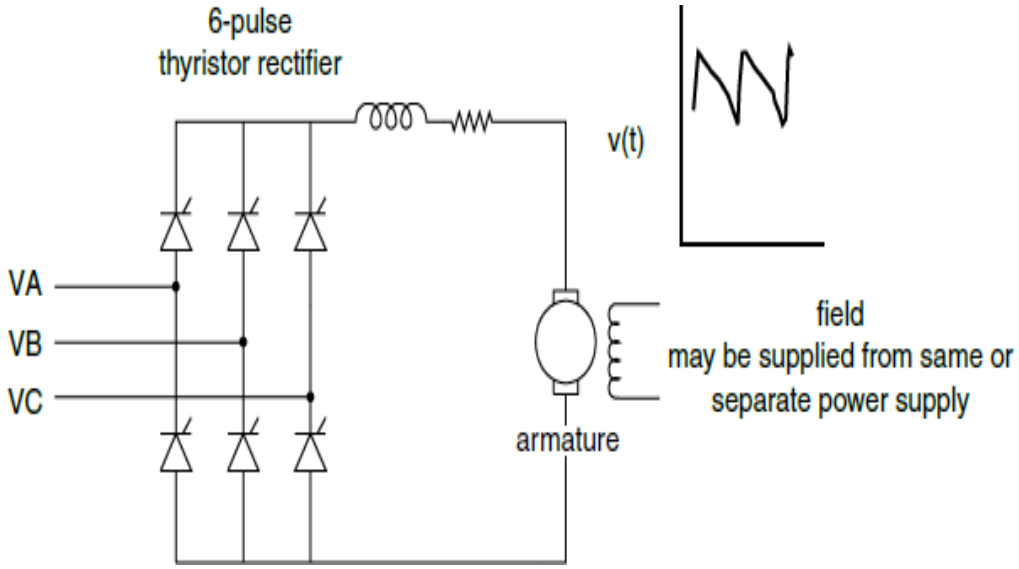

Fig. 3.16 six-pulse rectifier

- The 12-pulse drive has some drawbacks, including higher electronics costs and typically requiring an additional transformer.

3.6.3.1.2 AC Drives

- The rectifier output is inverted to produce a variable-frequency ac voltage for the motor.
- The Voltage source inverter requires constant dc voltage input. This can be achieved by means of a capacitor.
- The Current source inverter requires constant dc current input. This can be achieved by means of an inductor.

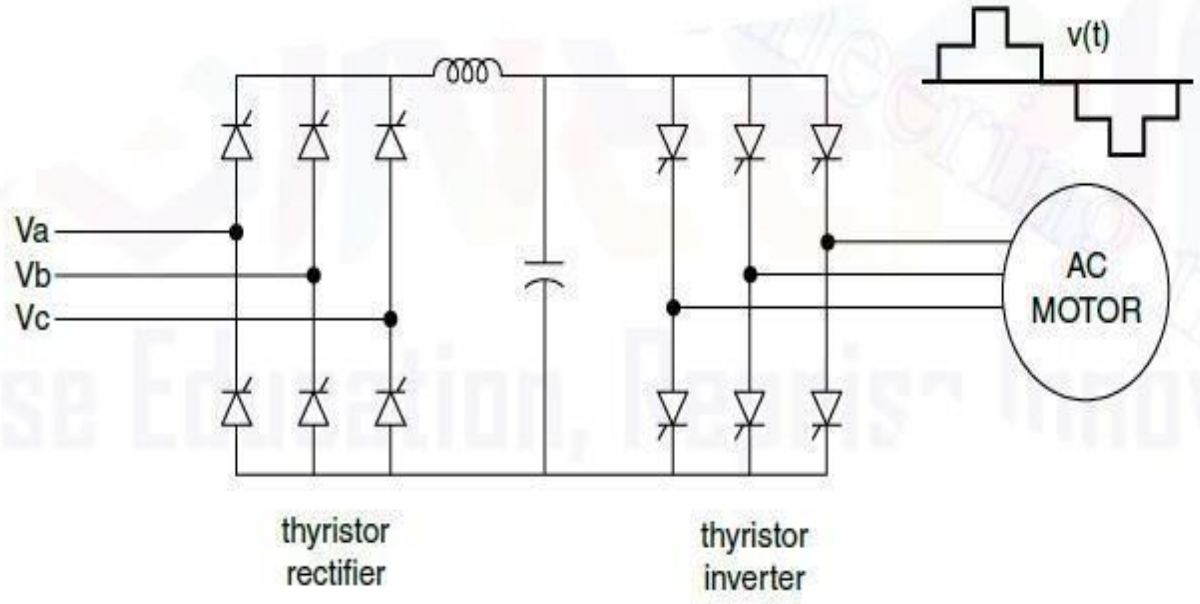

Fig. 3.17 Voltage Source Inverter

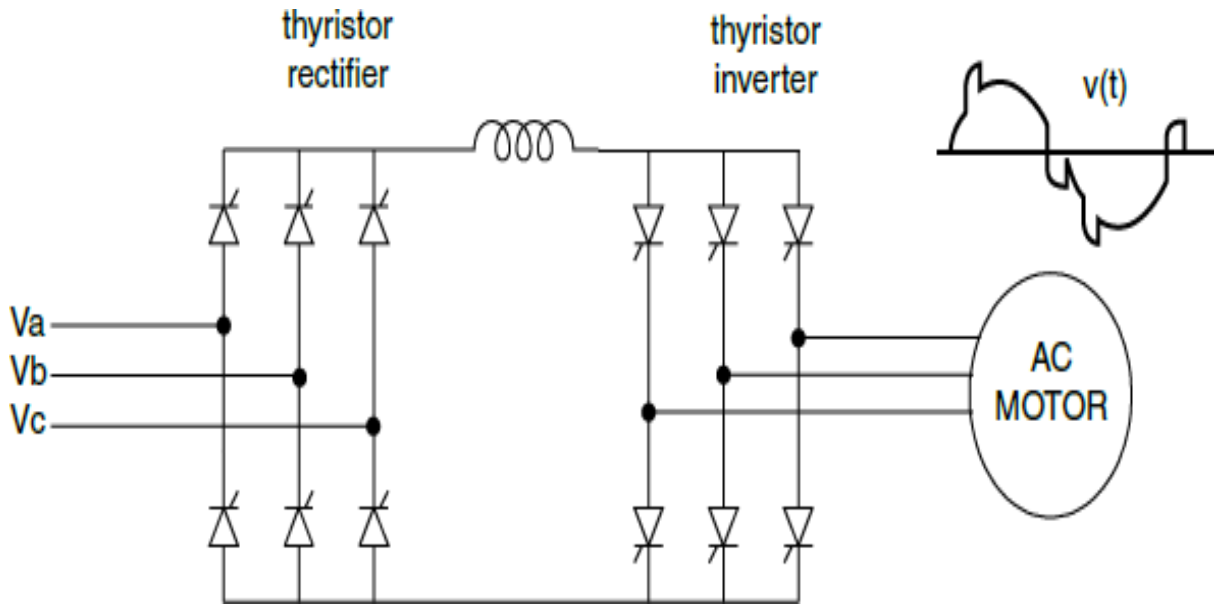

Fig. 3.18 Current Source Inverter

3.6.3.2 Arcing Devices

- Arcing devices includes Arc furnaces, Arc welders and Discharge lighting with magnetic ballasts.
- The voltage-current characteristics of an electric arc is generally nonlinear.
- The electric arc itself is actually best represented as a source of voltage harmonics.
- The harmonic content of an arc furnace load and other arcing devices is similar to that of the magnetic ballast.

3.6.3.3 Saturable Devices

- Transformers and other electromagnetic devices with steel cores, such as motors, fall under this type of equipment.
- Harmonics are generated due to the nonlinear magnetizing characteristics of the steel.

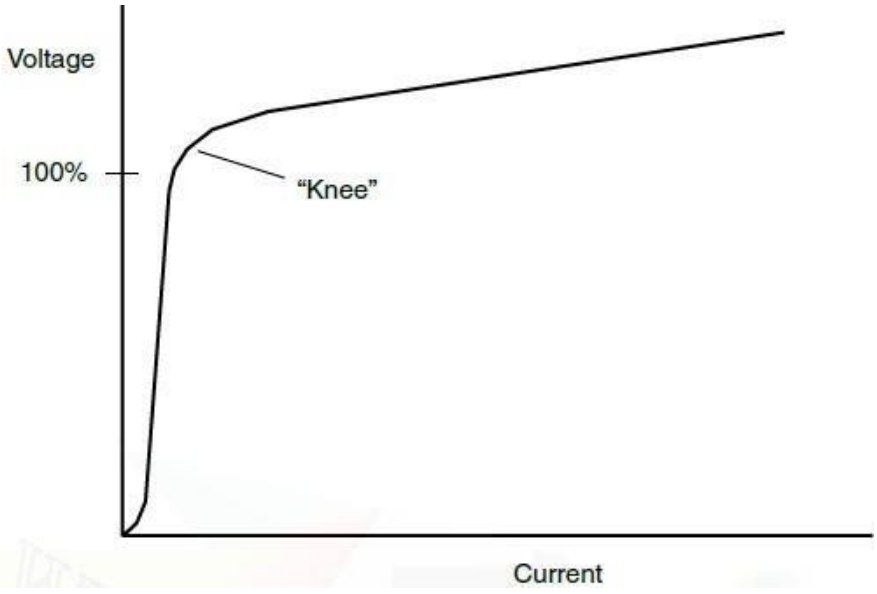

Fig. 3.19 Transformer magnetizing characteristic

- Despite the fact that the exciting current of a transformer is harmonically rich at normal operating voltage it normally represents less than 1% of the rated full load current.

3.6.4 Effects of harmonic distortion

- Nonlinear loads cause harmonic currents to be fed back into the supply systems.
- These currents may interact negatively with a variety of power system components, including

  1. Capacitors, 2. Transformers, and 3.Motors

- These currents lead to increased losses, overheating, and overloading.
- These harmonic currents can also cause interference with telecommunication lines and errors in power metering.
- Impact of Harmonic Distortion on Power System Components includes

  1. Capacitors 2. Transformers 3. Motors

  4. Telecommunications 5. Energy and Demand Metering 6. Interharmonics

3.6.4.1 Impact of Harmonic Distortion on Power System Components- Capacitors

- High voltage distortion occurs during resonance in a capacitor bank.
- The current flowing in the capacitor bank is also significantly large and rich in a monotonic harmonic.
- This current waveform typically indicates that the system is in resonance and a capacitor bank is involved.
- In resonance condition, the rms current is typically higher than the capacitor rms current rating

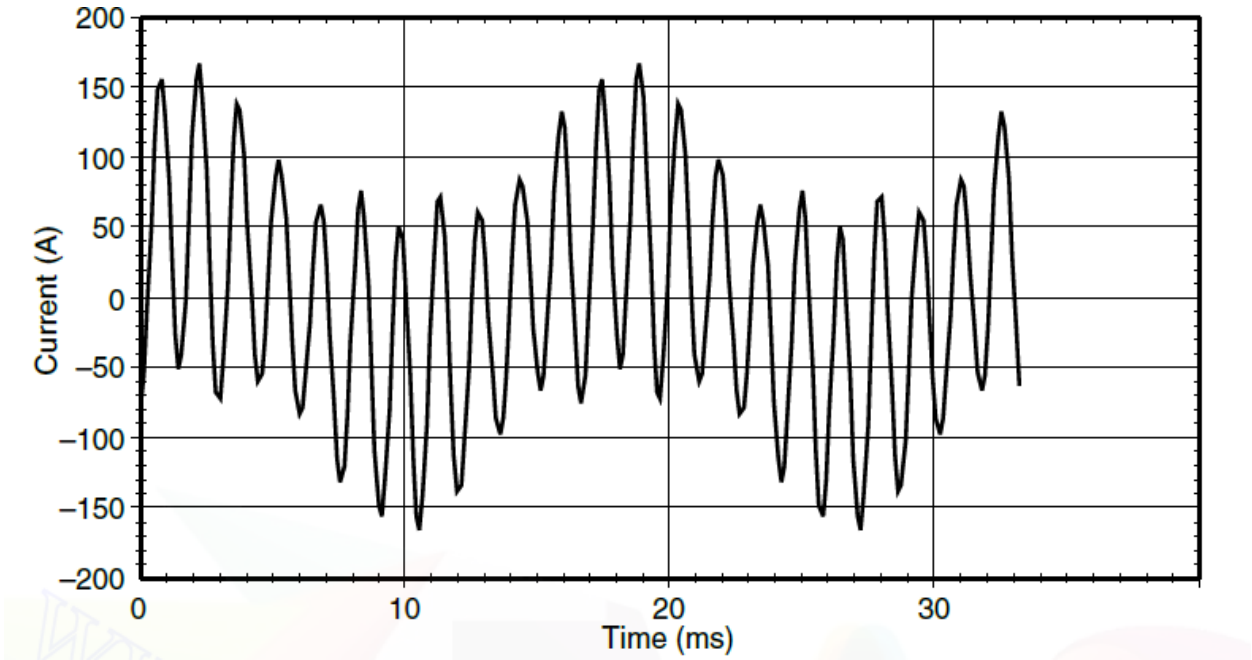

Fig. 3.20 Capacitor current from a system in 11th- harmonic resonance

3.6.4.1.1 IEEE Standards for Shunt Capacitors to limit Harmonic Distortion

- 135 percent of nameplate kvar.
- 110 percent of rated rms voltage (including harmonics but excluding transients).
- 180 percent of rated rms current (including fundamental and harmonic current).
- 120 percent of peak voltage (including harmonics).

3.6.4.2 Impact of Harmonic Distortion on Power System Components- Transformer

- Transformers are built to provide connected loads with the necessary power while minimizing losses at fundamental frequency.
- Harmonic distortion currents as well as harmonic distortion voltage may cause some additional heating of transformer.
- If the current distortion in a transformer exceeds 5%, can be treated as undervalue.

- When harmonic components are present in the load current, there are three effects that lead to increased transformer heating:
  - **R.M.S Current:** If the size of the transformer is selected according to kVA requirements of the load, harmonic currents may result in the transformer rms current being higher than its capacity. The increased total rms current results in increased conductor losses.
  - **Eddy current losses:** Eddy currents are caused by the magnetic flux in the core. These currents flow in the windings, in the core, and in other conducting bodies cause additional heating. This component of the transformer losses increases with the square of the frequency of the current causing the eddy currents.
  - **Core loss:** Core loss depends on harmonic voltage and the design of magnetic core. Core loss can be reduced by selecting good quality of steel and by laminating the core.

3.6.4.3 Impact of Harmonic Distortion on Power System Components- Motors & Generators

- Harmonic voltage and current cause increased heating in rotating machines due to additional iron and copper losses at harmonic frequencies.
- This lowers the machine efficiency and affects the torque developed.
- The flow of harmonic currents in the stator induces current flow in the rotor. This results in rotor heating and pulsating or reduced torque.
- Rotor heating reduces the efficiency and life of the machinery.
- Pulsating or reduced torque results in mechanical oscillation causing shaft fatigue and increased ageing of mechanical parts.

3.6.4.4 Impact of Harmonic Distortion on Power System Components- Telecommunication

- Harmonic currents flowing on the utility distribution system or within an end-user facility can create interference in communication circuits sharing a common path.
- Triplen harmonics (3d, 9th, 15th) are especially troublesome in four-wire systems because they are in phase in all conductors of a three-phase circuit and, therefore, add directly in the neutral circuit.
- Harmonic currents on the power system are coupled into communication circuits by either induction or direct conduction.

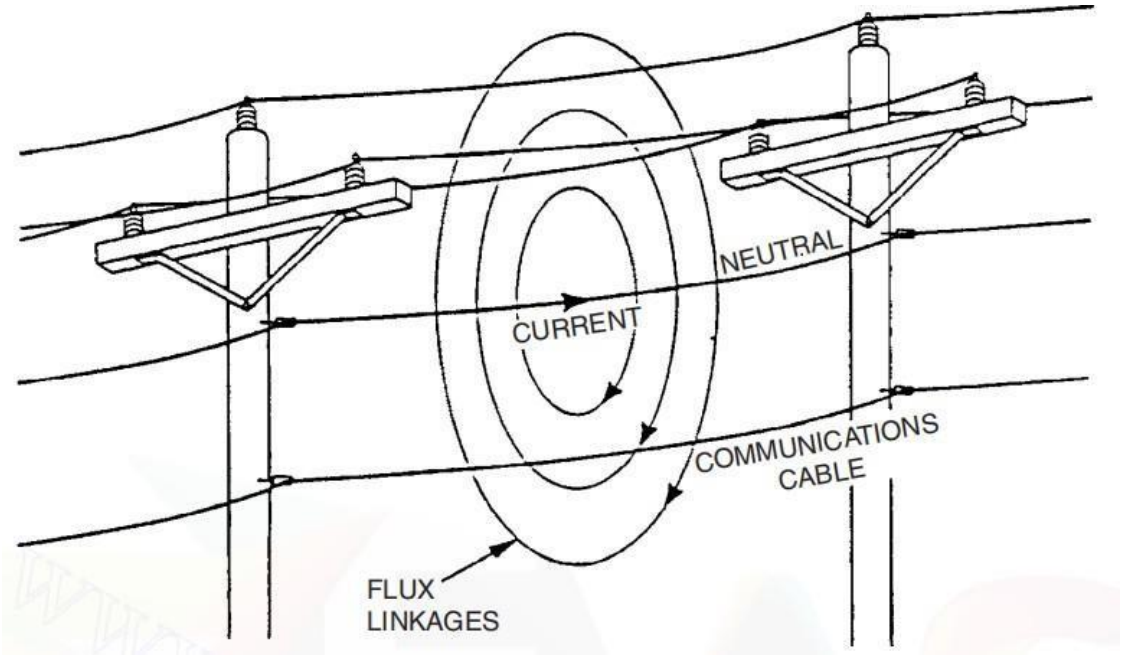

Fig. 3.20 Inductive coupling of Power system residual current to telephone circuit

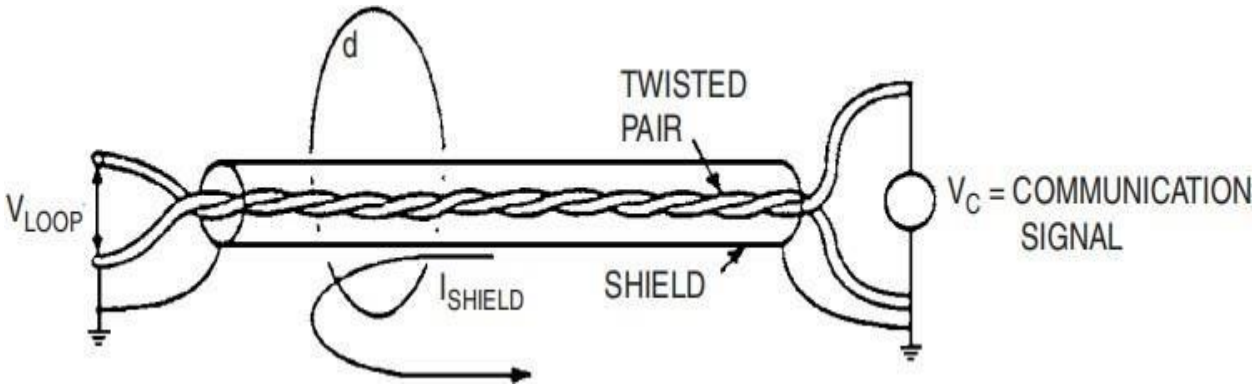

Fig. 3.21 IR drop in cable shield resulting in potential differences in ground references at ends of cable.

- Shield currents can also be caused by direct conduction.
- The shield is in parallel with the power system ground path.
- This cause relatively large amount of current flows in the shield.
- The high shield voltage IR drop will again cause a potential difference in the ground references at the ends of the telephone lines.

3.6.4.5 Impact of Harmonic Distortion on Power System Components- Energy and Demand Metering

- The total cumulative energy consumed and the maximum power used over a specific time period are the two quantities that electric utility (Ex: Discoms) companies often employ to calculate energy consumption.
- For Industrial consumers, two charges are included in their billing such as Energy charges and Max. demand charges.
- Residential consumers typically charged for energy consumption only.
- Energy charges are measured by using Watthour meter.

- Demand Charges are measured by using demand meter.
- Demand meter is usually integrated to watthour meter with a timing device to register the peak power use.
- Harmonic currents from nonlinear loads can impact the accuracy of watthour and demand meters adversely.
- Harmonic frequencies tend to produce negative errors in conventional magnetic disk watthour meters.
- This error increases with increasing frequency
- In general, nonlinear loads tend to inject harmonic power back onto the supply system and linear loads absorb harmonic power due to the distortion in the voltage.

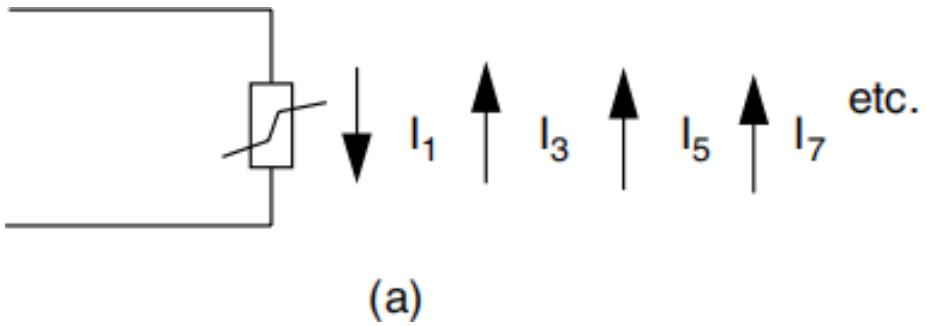

Fig.3.2.22 Direction of Harmonic Currents-**Non-Linear Load**



(b)

Fig.3.2.23 Direction of Harmonic Currents- **Linear Load**

Thus for the nonlinear load, the meter would read

$$P_{measured} = P_1 - a_3P_3 - a_5P_5 - a_7P_7 - \cdots \ldots \ldots$$

For Linear load, the meter would read

$$P_{measured} = P_1 + a_3P_3 + a_5P_5 + a_7P_7 + \cdots \ldots \ldots$$

3.6.4.6 Impact of Harmonic Distortion on Power System Components- Interharmonics

- The Fourier theory states that a periodic waveform can be represented as the sum of pure sine waves of various amplitudes, where each sinusoid's frequency is an integer multiple of the periodic waveform's fundamental frequency.
- A frequency that is an integer multiple of the fundamental frequency is called a harmonic frequency.

i.e. $f_h = hf_0$

Where f_0 is the fundamental frequency, h is an integer

- Non integer multiple of the fundamental frequency is called a Inter harmonic frequency.

  i.e. $f_{ih} = h_i f_0$ Where f_0 is the fundamental frequency, hi is non integer

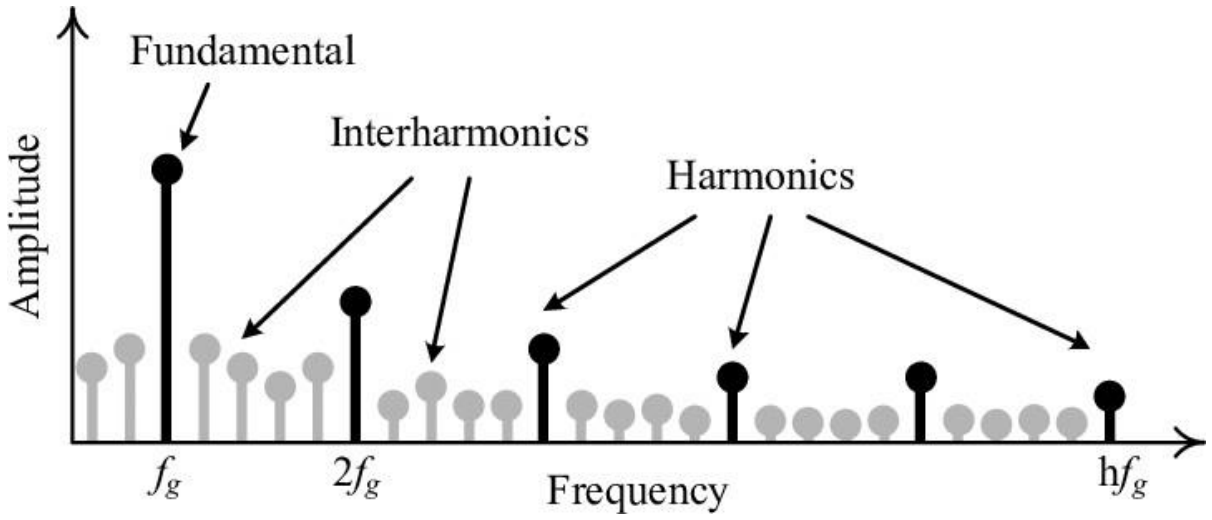

Fig.3.2.24 Interharmonics

- The Interharmonics appear in pairs at the following frequencies:

  $2fo \pm fs, 4fo \pm fs, \ldots$

  Where f_o and f_s are the furnace operating frequency and the fundamental of the ac main frequency, respectively.

3.7 Harmonic Distortion Evaluations

- Harmonic currents produced by nonlinear loads can interact adversely with the utility supply system.
- These harmonic current often gives rise to voltage and current harmonic distortion observed in many places in the system.
- Therefore, IEEE Standard 519-19922 proposes to limit harmonic current injection from end users to limit both voltage and current harmonic distortion.
- This approach requires participation from both end users and utilities.
- For individual end users, IEEE Standard 519-1992 limits the level of harmonic current injection at the **point of common coupling** (PCC).
- For individual end users, recommended limits are provided for both individual harmonic components and the **total demand distortion** (TDD).
- These limits are expressed in terms of a percentage of the end user's maximum demand current level, rather than as a percentage of the fundamental.
- Since the harmonic voltage distortion on the utility system arises from the interaction between distorted load currents and the utility system impedance.
- The utility is mainly responsible for limiting the voltage distortion at the PCC.
- The limits are given for the maximum individual harmonic components and for the total harmonic distortion (THD).
- For systems below 69 kV, the THD should be less than 5 percent.
- Resonance of power factor correction capacitor banks results in a very high impedance and high harmonic voltages.

- In compliance with IEEE Standard 519-1992 often means that the utility must ensure that system resonances do not coincide with harmonic frequencies present in the load currents.

3.7.1 Point of common coupling (PCC)

- As per IEEE, the PCC can be defined as the point in the power system at which the **electric utility** and the **customer interface** occurs.
- If multiple customers are served from the primary of the transformer, the PCC is then located at the primary.(shown in Fig. 3.2.25(a))

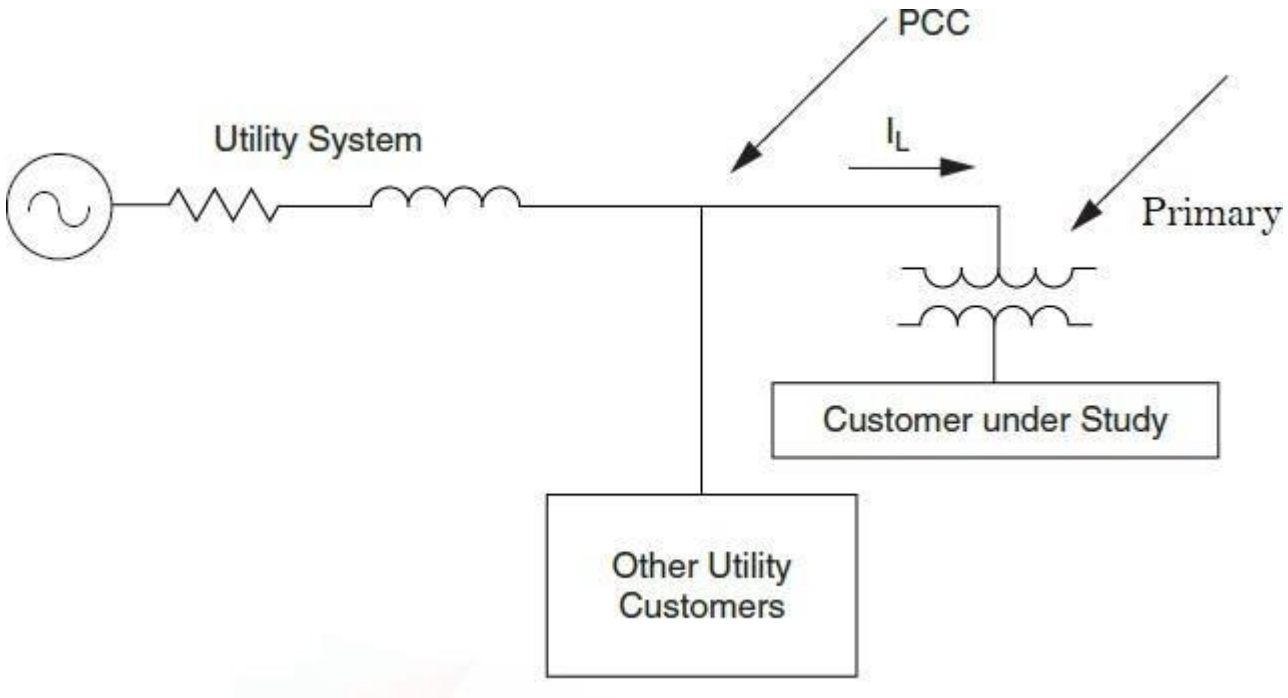

Fig.3.2.25 (a) PCC at the transformer primary where multiple customers are served.

- If multiple customers are served from the secondary of the transformer, the PCC is located at the secondary.(shown in Fig. 3.2.25(b))

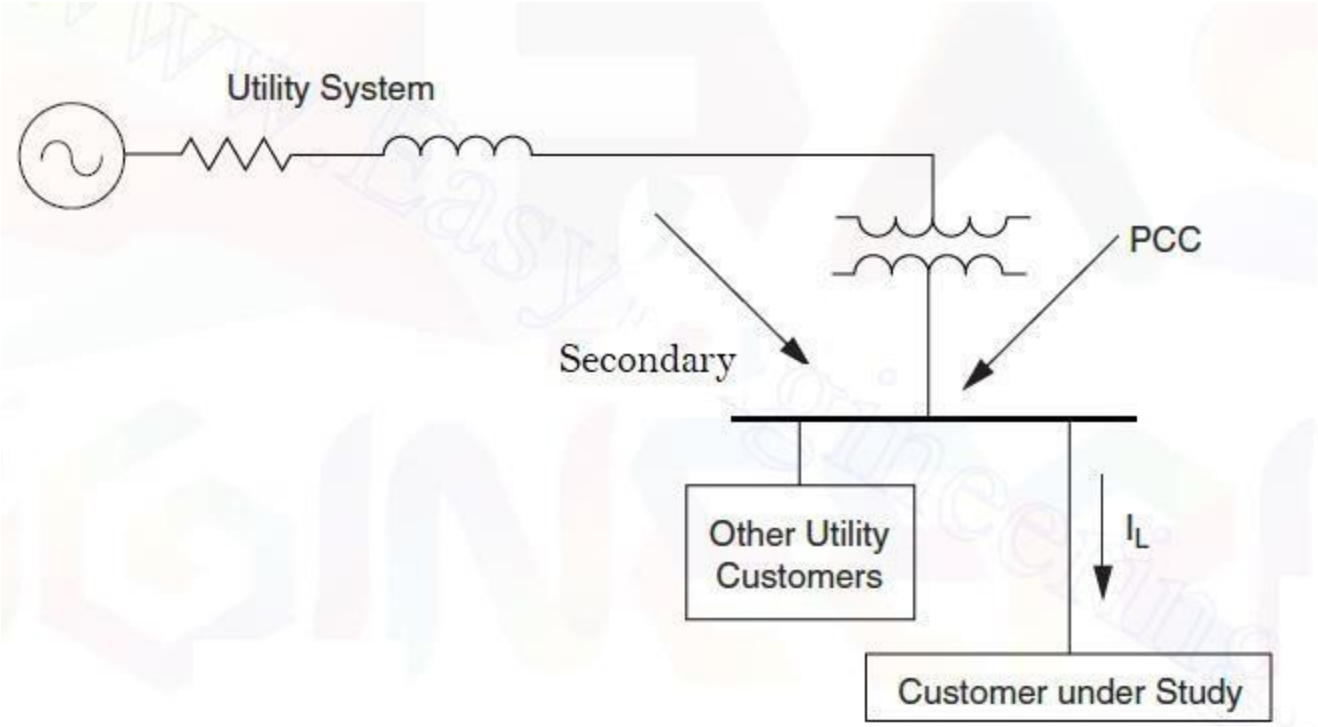

Fig.3.2.25 (b) PCC at the transformer Secondary where multiple customers are served.

- It should be noted that current measurements for verification can still be carried out at the transformer secondary even if the PCC is the primary of the transformer.
- The transformer's turns ratio should be used to refer to the measurement results at high side.
- To evaluate harmonic distortion, the effect of transformer connection on the zero-sequence components must be taken into account.

3.7.2 Harmonic evaluations on the utility system

- The utility system's harmonic evaluations include procedure to determine if the voltage distortion is acceptable to each and every customer.
- If the voltage distortion exceeds the recommended limits, corrective actions will be taken to reduce the distortion to a level within limits.

- IEEE Standard 519-1992 provides guidelines for acceptable levels of voltage distortion on the utility system (as shown in Table.1)

Bus voltage at PCC, V_n (kV)	Individual harmonic voltage distortion (%)	Total voltage distortion, THD_{V_n} (%)
$V_n \leq 69$	3.0	5.0
$69 < V_n \leq 161$	1.5	2.5
$V_n > 161$	1.0	1.5

Table.1.Harmonic Voltage Distortion Limits in Percent of Nominal Fundamental Frequency Voltage

- There are **two** important components for limiting voltage distortion levels on the overall utility system:

1) a) Harmonic currents injected from individual end users on the system must be limited.

b) These currents propagate toward the supply source through the system impedance, creating voltage distortion.

c) Therefore, it is possible to control the voltage distortion by reducing the amount of injected harmonic currents.

d) IEEE Standard 519- 1992 proposed basic method of controlling the overall distortion.

2) a) The overall voltage distortion levels can be excessively high when one of the harmonic current frequencies is close to a system resonance frequency.

b) At some system locations, this may lead to voltage distortion levels that are unacceptable.

c)Usually, a capacitor bank that takes part in the resonance will have the maximum voltage distortion.

3.7.2.1 Voltage limit evaluation procedure

- Fig.3.2.26 shows a flowchart of the evaluation procedure.

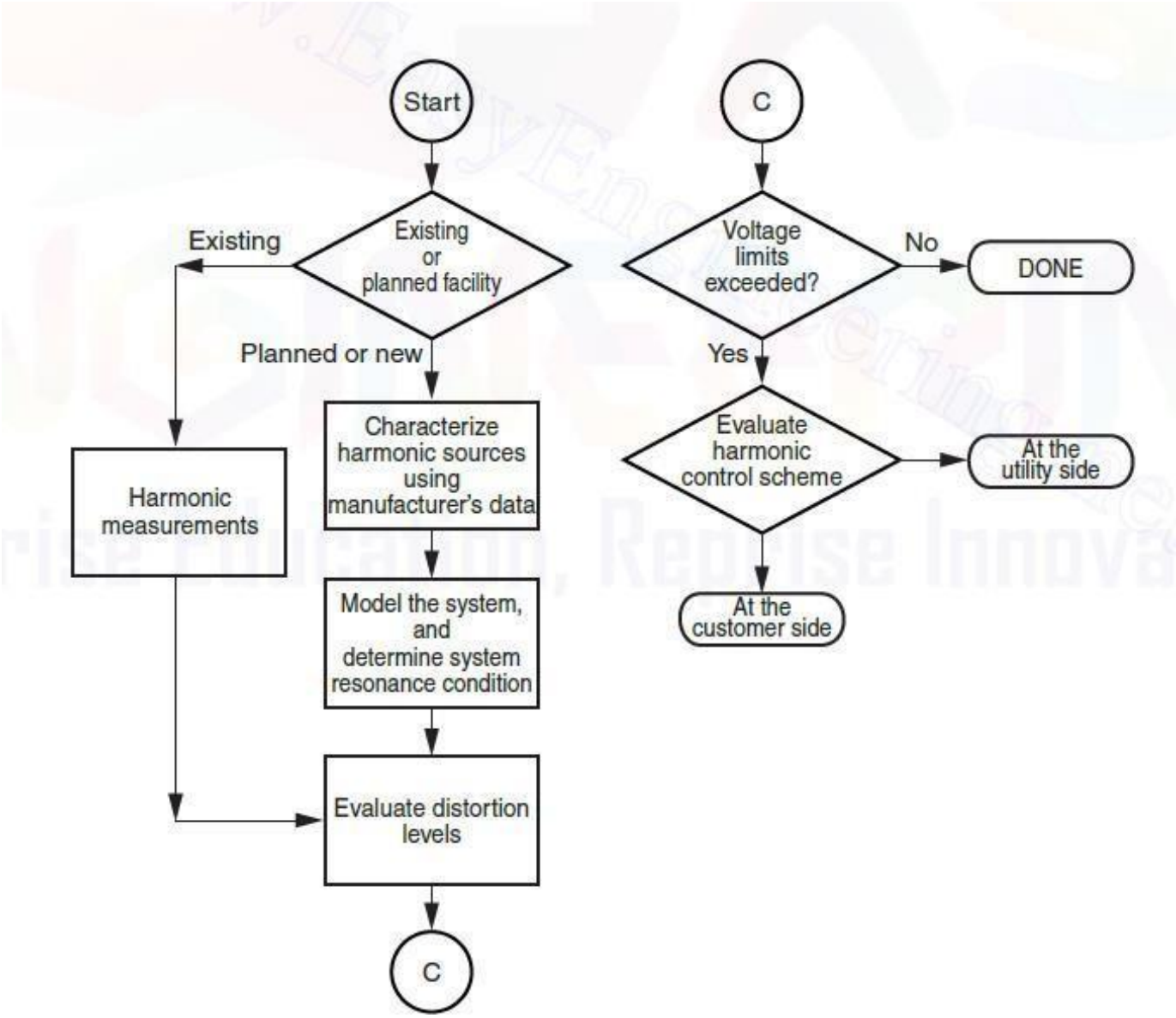

Fig.3.2.26 Voltage limit evaluation procedure

- The voltage limit evaluation procedure involves

  - **Harmonic source characterization**.

1) Measurements of existing installations are the most effective way to identify the characteristics of the system's harmonic sources.
2) These measurements should be performed at facilities where nonlinear loads are suspected of being problematic.
3) Measurements typically last at least a week in order to record all cycle load fluctuations.

- **System Modeling**

1) The system response to the harmonic currents injected at end-user locations or by nonlinear devices on the power system is determined by developing a computer model of the system.

- **System frequency response**

1) Frequency scan of the entire power delivery system should be done to determine any possible system resonance since capacitor configuration is the primary factor influencing the resonant frequencies.

- **Evaluate expected distortion levels**

1) The voltage distortion levels are tolerable even the system resonance is near to characteristic harmonics.
2) The majority of resonances on distribution systems are considerably dampened by the system's resistances which reduces magnification of harmonic currents.
3) The worst-case frequency-response characteristics of the system can be estimated by using harmonic sources.

4) This will indicate whether the mitigation measures required or not.

- **Evaluate harmonic control scheme**

1) The Options for harmonic control include modifying the system's frequency-response properties, preventing the flow of harmonic currents by using harmonic filters, and regulating the harmonic injection from nonlinear loads.
2) For some systems, designing passive filters can be challenging since the properties of the system change often as a result of shifting capacitor banks and varying loads.

3.7.3 Harmonic evaluation for end-user facilities

1) The Harmonic problems are more common at end-user facilities than on the utility supply system.
2) The majority of nonlinear loads are found in end-user facilities, and the areas closest to harmonic sources have the highest voltage distortion values.
3) The most significant problems occur when there are **nonlinear loads and power factor correction capacitor**s that result in resonant conditions.
4) IEEE Standard 519-1992 establishes harmonic current distortion limits at the PCC. Shown in Table.2.
5) I_h is the magnitude of individual harmonic components (rms amps).
6) I_{SC} is the short-circuit current at the PCC.

$$I_{sc} = \frac{1000 \text{ x MVA}}{\sqrt{3}\text{kV}} \quad \text{Amperes}$$

7) I_L is the fundamental component of the maximum demand load current at the PCC.

$$I_L = \frac{kW}{P.F\sqrt{3}kV} \quad Amperes$$

8) The short-circuit ratio is now determined by:

$$SCR = \frac{I_{sc}}{I_L}$$

I_{SC}/I_L	$h < 11$	$11 \le h < 17$	$17 \le h < 23$	$23 \le h < 35$	$35 \le h$	TDD
			$V_n \le 69$ kV			
<20	4.0	2.0	1.5	0.6	0.3	5.0
20–50	7.0	3.5	2.5	1.0	0.5	8.0
50–100	10.0	4.5	4.0	1.5	0.7	12.0
100–1000	12.0	5.5	5.0	2.0	1.0	15.0
>1000	15.0	7.0	6.0	2.5	1.4	20.0
			69 kV $< V_n \le$ 161 kV			
<20*	2.0	1.0	0.75	0.3	0.15	2.5
20–50	3.5	1.75	1.25	0.5	0.25	4.0
50–100	5.0	2.25	2.0	0.75	0.35	6.0
100–1000	6.0	2.75	2.5	1.0	0.5	7.5
>1000	7.5	3.5	3.0	1.25	0.7	10.0
			$V_n >$ 161 kV			
<50	2.0	1.0	0.75	0.3	0.15	2.5
≥50	3.0	1.50	1.15	0.45	0.22	3.75

Table.2. Harmonic Current Distortion Limits (I_h) in Percent of I_L

- The current limit evaluation procedure involves

This procedure involves evaluation of the harmonic generation characteristics from individual end-user loads with respect to IEEE Standard 519-1992 limits. But when it comes to power factor correction devices, more care must be taken.

1) Defining point of common coupling (PCC) - For industrial and commercial end users, the PCC is usually at the primary side of a service transformer supplying the facility.
2) Calculate the short-circuit ratio at the PCC and find the corresponding limits on individual harmonics and on the TDD.
3) Harmonic source characterization- The total amount of harmonic current generated in the facility is the sum of the individual nonlinear loads.
4) Conducting measurements at the PCC over a period of time (at least one week) is the most effective method for characterizing harmonic current in an existing facility.
5) Evaluate harmonic current levels with respect to current limits using Table.2.
6) The facility may need mitigation if these values are higher than the IEEE Standard 519-1992 suggested limit.

3.8 Principles of controlling harmonics

- There are three common causes of harmonic problems:
  - The source of harmonic current is too great.
  - Currents flow is too long (electrically), resulting in either high voltage distortion or telephone interference.
  - The response of the system magnifies one or more harmonics to a greater degree than can be tolerated.

When a problem occurs, the basic options for controlling harmonics are:

3.8.1 Reducing harmonic currents in loads

- This involves minimizing the harmonic currents generated by nonlinear loads.
- Techniques include using equipment with lower harmonic distortion and ensuring proper operation of existing equipment.
- Adding a line reactor or transformer in series will significantly reduce harmonics, as well as provide transient protection benefits.
- Transformer connections can be employed to reduce harmonic currents in three-phase systems.
- Delta-connected transformers can block the flow of zero-sequence harmonics (typically triplens) from the line.
- Zigzag and grounding transformers can shunt the triplens off the line.

3.8.2 Filtering

- Filters can be used to divert harmonic currents away from the system, block them from entering the system, or supply them locally. Common types of filters include:
- **Shunt Filter:** These short-circuit harmonic currents close to the source of distortion, preventing them from entering the supply system.
- **Series Filter**: Series filter that blocks the harmonic currents. This is a parallel-tuned circuit that offers high impedance to the harmonic current
- **Active filters:** Active filters work by electronically supplying the harmonic component of the current into a nonlinear load.

- 3.8.3 Modifying the system frequency response

There are a number of methods to modify adverse system responses to harmonics:

- Shunt filter completely changes the system response, most often, but not always, for the better.
- Add a reactor to detune the system. Harmful resonances generally occur between the system inductance and shunt power factor correction capacitors. The reactor must be added between the capacitor and the supply system source.
- Change the capacitor size. This is often one of the least expensive options for both utilities and industrial customers.
- Remove the capacitor and simply accept the higher losses, lower voltage, and power factor penalty. If technically feasible, this is occasionally the best economic choice.

3.9 Devices for controlling harmonic distortion

There are a number of devices available to control harmonic distortion.

- Inline-reactors or Chokes
- Zig Zag transformers
- Passive Filters
- Active Filters

3.9.1 Inline-reactors or Chokes

- Inline-reactors or Chokes are mainly used in Adjustable Speed Drives (ASD).
- This is particularly effective for (Pulse Width Modulation) PWM-type drives.
- It is a simple, but often successful, method to control harmonic distortion generated by adjustable-speed drives.

- This reactor, or choke, commonly inserted at the line input side of the drive.
- The inductance of the choke makes the capacitor to draw the current for a longer period by slowing down the rate at which the capacitor charges.
- This effect makes current with less harmonic content while still delivering the same energy.
- For a PWM-type drive, a 3% input choke can reduce harmonic current distortion from 80% to 40%.
- The Fig.3.2.27 shows the impact of choke coil on harmonic reduction for PWM type ASD

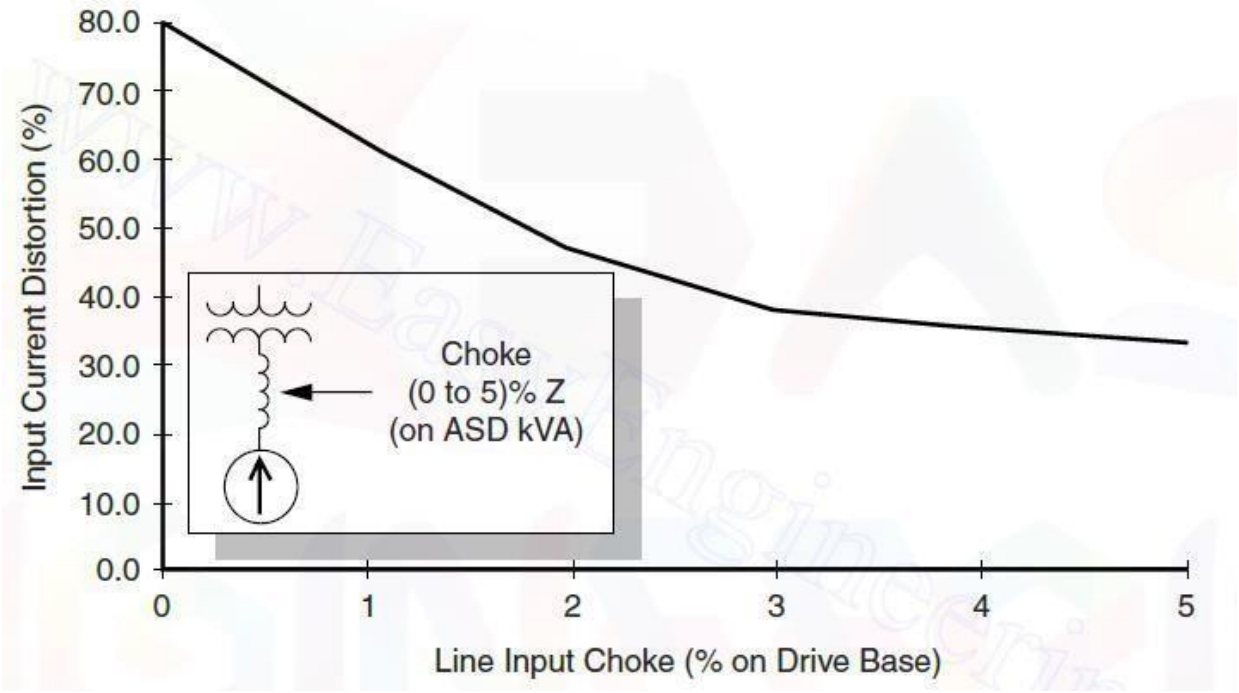

Fig.3.2.27 Harmonic reduction for a PWM-type ASD as a function of input choke size

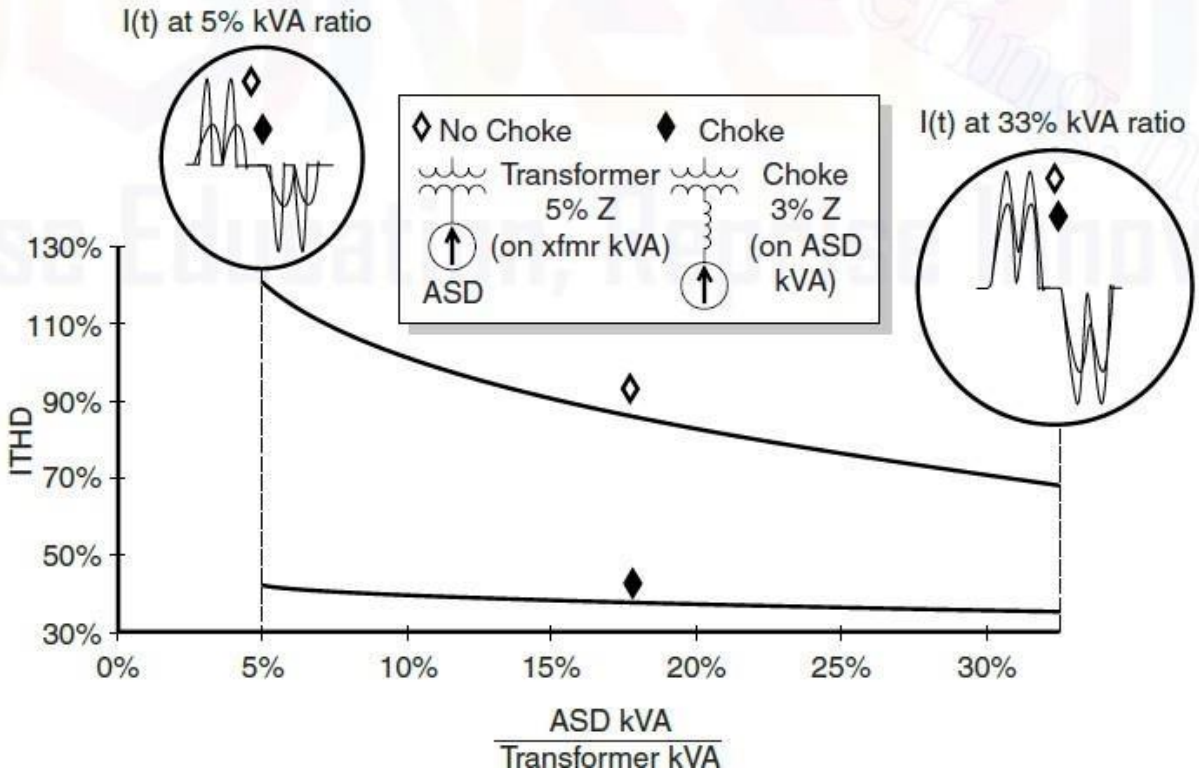

Fig.3.2.28 Total Harmonic Distortion at 3% choke and without choke

- Due to the choke coil, the current THD drops from the 80% to 120% percent range down to approximately 40 percent.
- Better results can be obtained if the size of the ASD is significantly smaller than the service transformer.
- Another advantage of using choke is blocking some high-frequency transients.
- Isolation transformer can be used in place of choke, but it leads to increase in cost.

3.9.2 Zig Zag transformers

- Commercial facilities frequently employ zigzag transformers to control **zero-sequence harmonic components**.

- A zigzag transformer acts like a filter to the zero-sequence current by offering a low-impedance path to neutral.
- The transformer needs to be placed close to the load on the circuit that is being protected
- Commercial facilities often face issues like overloaded neutral conductor and transformer heating.
- These two issues can be resolved with the proper placement of the zigzag transformer.
- Zigzag transformer can almost always reduce neutral currents due to zero-sequence harmonics to acceptable levels.
- The largest zero-sequence harmonic will nearly always be the **third harmonic** in office buildings with many computers and related equipment.
- In new facilities, circuits with sufficient current-carrying capacity in the neutrals and with higher capacity transformers are required to be designed.

3.9.3 Passive Filters

- Passive filters are inductance, capacitance, and resistance elements configured and tuned to control harmonics.
- Passive filters are commonly used and are relatively inexpensive compared with other means for eliminating harmonic distortion.
- They are employed either to shunt the harmonic currents off the line or to block their flow between parts of the system by tuning the elements to create a resonance at a selected frequency.
- Fig.3.2.29 shows several types of common filter configuration.

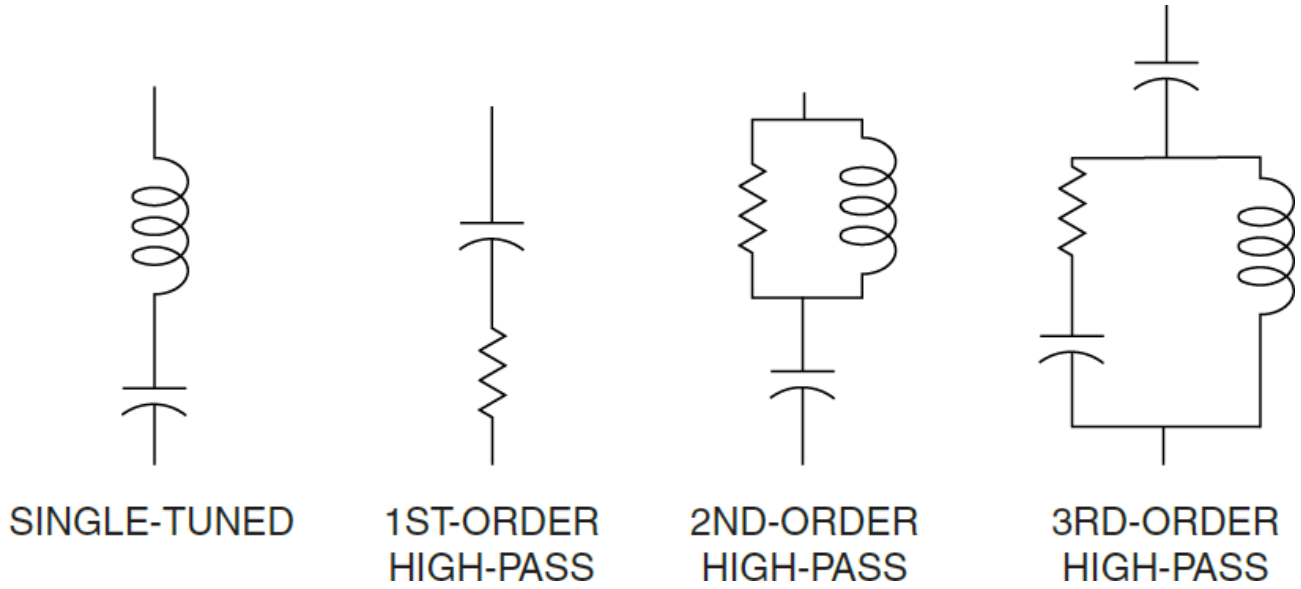

Fig.3.2.29 Filter Configurations

3.9.3.1 Shunt Passive Filters

- They are Single-tuned "notch" filters are the most widely used passive filter type.
- This is the cost effective and is frequently sufficient for the application.
- The notch filter offers low impedance to a particular harmonic current and is **connected in shunt** with the power system.
- Harmonic currents are diverted from their normal flow path on the line through the filter.
- Notch filters can provide power factor correction in addition to harmonic suppression.
- The notch harmonic h_{notch} is related to the fundamental frequency reactances by

$$h_{notch} = \sqrt{\frac{X_C}{3X_F}}$$

- The side effect of this type of filter is that it creates a sharp parallel resonance point at a frequency below the notch frequency.

- To avoid problems with this resonance, filters are added to the system starting with the lowest significant harmonic found in the system.

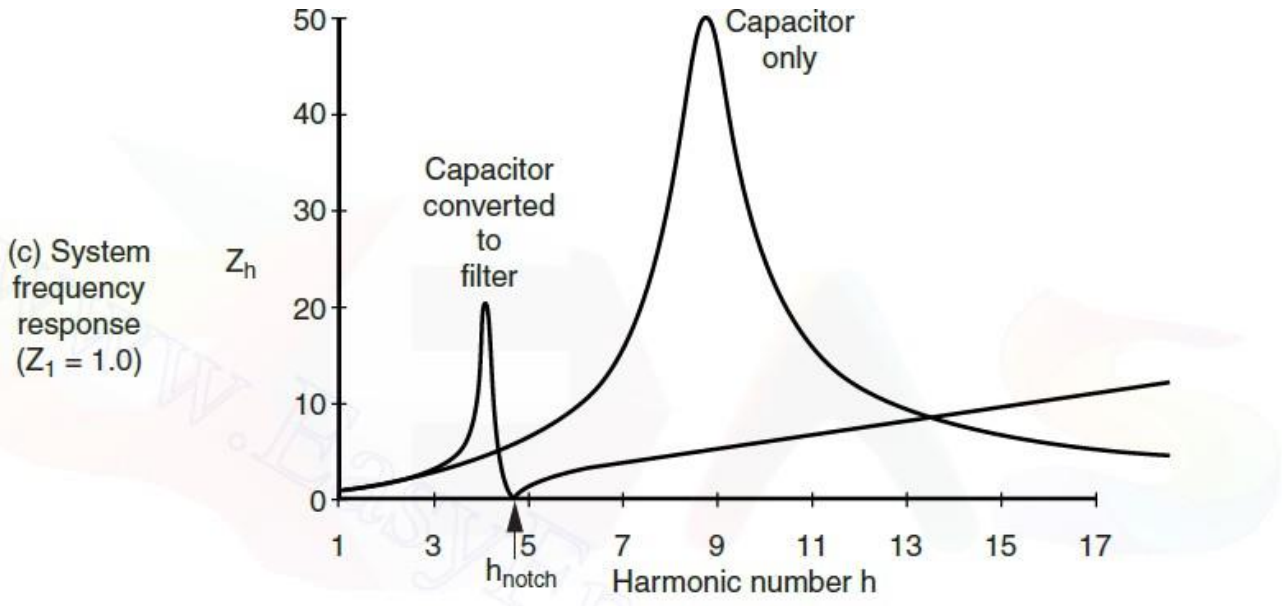

Fig.3.2.30 creating a fifth-harmonic notch filter and its effect on system response

- Passive filters should always be placed on a bus where the short-circuit reactance X_{SC} can be expected to remain constant.
- Filters must be designed with the capacity of the bus in mind.
- Small voltage distortion on a very strong bus may impose excessive duty on the filter.

3.9.3.2 Series Passive Filters

- Shunt passive filter or notch filter which is connected in shunt with the power system.
- Series passive filter is connected in series with the load.
- The inductance and capacitance are connected in parallel and are tuned to provide high impedance at a selected harmonic frequency.

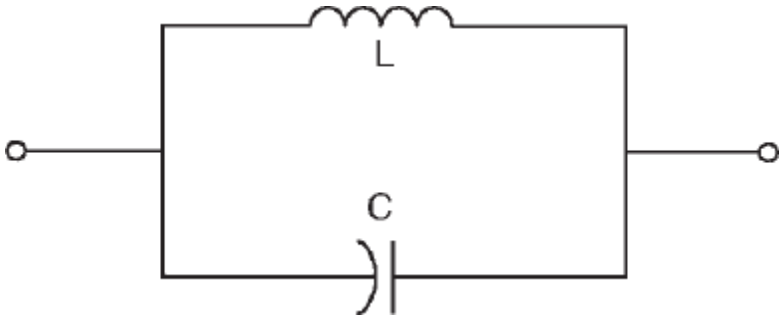

Fig.3.2.31 Series Passive Filter

- At fundamental frequency, the filter would be designed to provide low impedance.
- Series filters are used to block a single harmonic current (such as the third harmonic).
- The use of the series filters is limited in blocking multiple harmonic currents.
- For each harmonic current, the series filter has to be tuned.
- The series filter must be designed to carry a full rated load current and must have an overcurrent protection scheme.
- Series filters are therefore used less frequently than shunt filters.

3.9.3.3 Low-Pass Broad band Filters

- For practical applications, multi stages of both series and shunt filters are often required.
- For example, two stages of shunt filter (one is 7th harmonic filter and other is 5th harmonic filter) is required to block 7th harmonic frequency.
- Similarly, in series filter applications, each frequency requires a series filter of its own; thus, multiple stages of filters are needed to block multiple frequencies.
- In power systems, harmonics can appear not only in a single frequency but can spread over a wide range of frequencies.
- A six-pulse converter generates characteristic harmonics of 5th, 7th, 11th, 13th, etc.

- Power electronic converters can essentially generate time-varying Interharmonics covering a wide range of frequencies.
- Designing a shunt or series filter to eliminate or reduce these time-varying harmonics would be very difficult.
- **A low-pass broadband filter** is an ideal application to block multiple harmonic frequencies.
- This type of low-pass filter is typically designed to achieve a low cut off frequency, it is then called a low-pass broadband filter.
- A typical configuration of a low-pass broadband filter is shown in Fig. 3.2.32.

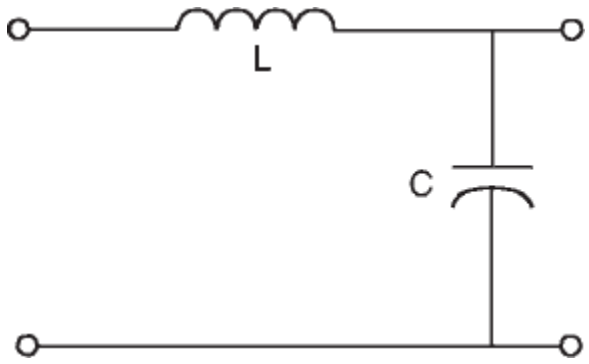

Fig.3.2.32 A low-pass broadband filter configuration.

- In distribution system applications, the effect of low-pass broadband filters can be obtained by installing a capacitor bank on the low-voltage side of a transformer.
- In industrial system applications, commercial low-pass broadband filters have been used to prevent harmonics produced by nonlinear loads from entering the ac system.

3.9.3.4 C Filters

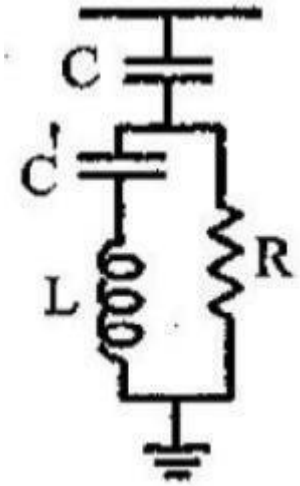

- **C** filters are an alternative to low-pass broadband filters in reducing multiple harmonic frequencies simultaneously in **industrial** and **utility systems.**
- These filters are capable of attenuating time varying harmonics and Interharmonics frequencies generated by electronic converters, induction furnaces, and cycloconverters.
- The configuration of a C filter is nearly identical to that of the Second-order high-pass filter shown in Fig.3.2.33.

Fig.3.2.33

- The main distinction between the two configurations is that the C filter possesses an auxiliary capacitor C^1 (C_a) in series with the inductor L.
- The impedance frequency response of a C filter is also essentially identical to that of a second-order high-pass filter.
- The high-frequency responses of the C filter and second-order high-pass filters are similar.
- The Fig.3.2.34 shows a typical C-filter configuration and its impedance frequency response.
- For attenuation at higher frequencies, the configuration of a C filter is coupled with a notch filter.
- The Fig.3.2.34 shows a typical C-filter configuration with and without notch filter.

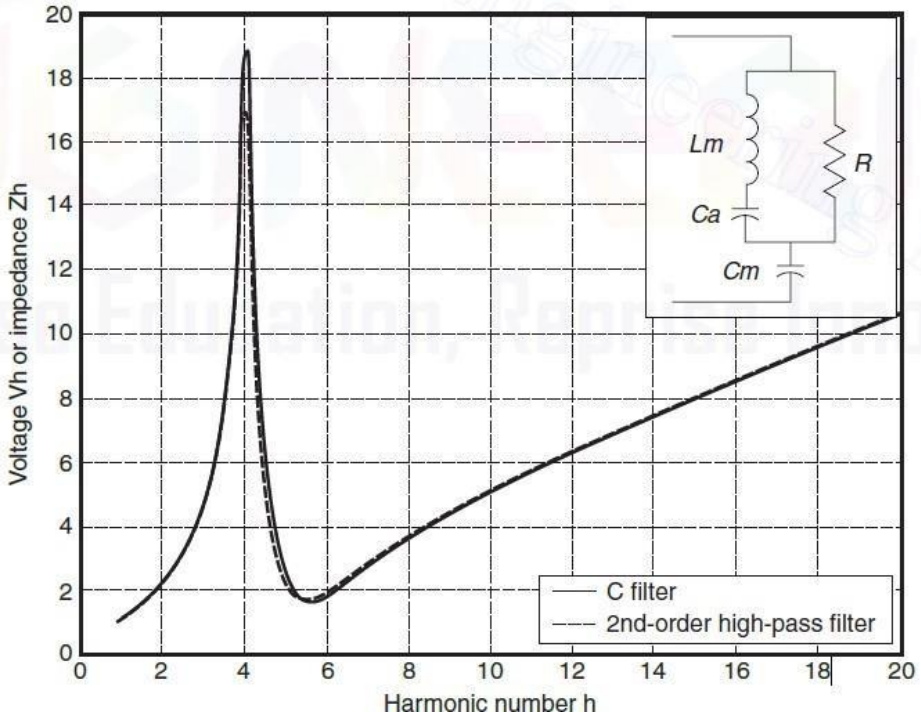

Fig.3.2.34 A typical C-filter configuration and its impedance frequency response

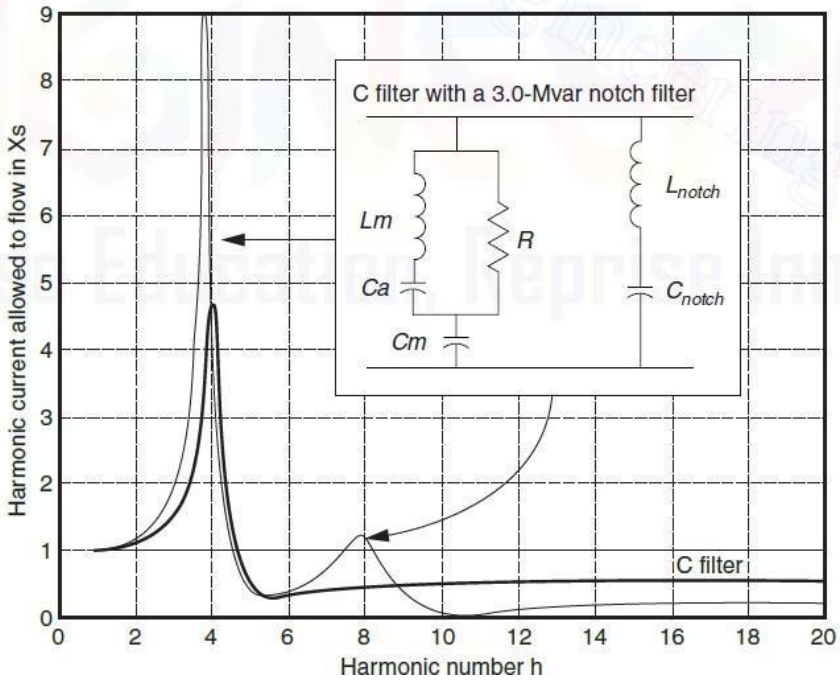

Fig.3.2.35 A **C** filter with and without a notch filter

3.9.4 Active Filters

- Active filters are a relatively new class of harmonic-eliminating devices.
- Compared to passive filters, they are significantly more costly and rely on advanced power electronics.
- Active filters can work independently of the system impedance characteristics.
- They can be applied in difficult situations where parallel resonance issues prevent passive filters from functioning properly.
- They can also deal with flicker and other issues related to power quality.
- They are particularly useful for large, distorting loads fed from relatively weak points on the power system.

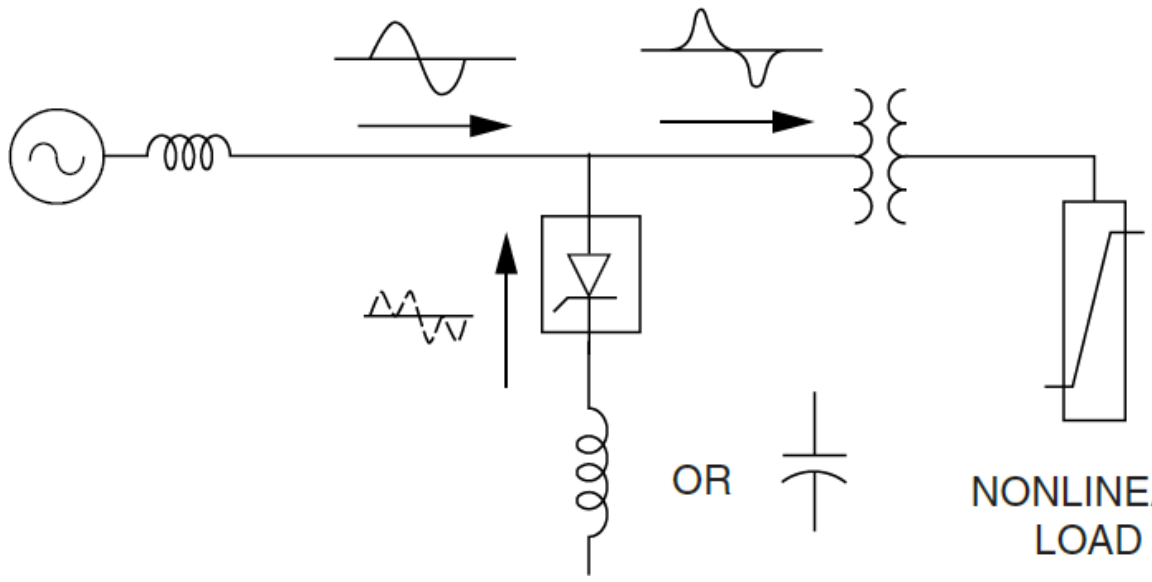

Fig.3.2.36 Application of an active filter at a load

- The basic idea is to replace the portion of the sine wave that is missing in the current in a nonlinear load.

- The Fig 3.2.36 shows the applications of an active filter particularly during nonlinear loads.
- An electronic control monitors the line voltage and/or current, switching the power electronics very precisely to track the load current or voltage and force it to be sinusoidal.
- Active filter is one that uses an inductor to store current to be injected into the system.
- Active filters are typically programmed to correct for the power factor as well as harmonics.

3.10 Standards on Harmonics

- The primary objective of the standards is to provide a **common ground** for all involved parties to work together to ensure compatibility between end-use equipment and the system equipment is applied.
- Standards governing harmonic limits, including
  - IEEE 519-1992,
  - IEC 61000-2-2,
  - IEC 61000-3-2,
  - IEC 61000-3-4,
  - IEC 61000-3-6,
  - NRS 048-2,13 and
  - EN50160.14

3.10.1 IEEE 519-1992

- IEEE Standard 519-1992 represents a consensus of guidelines and recommended practices by the utilities and their customers in minimizing and controlling the impact of harmonics generated by nonlinear loads.
- The limits on harmonic voltage and current based on IEEE 519-1992 Standard are shown in Table 3.

Bus voltage at PCC, V_n (kV)	Individual harmonic voltage distortion (%)	Total voltage distortion, THD_{V_n} (%)
$V_n \leq 69$	3.0	5.0
$69 < V_n \leq 161$	1.5	2.5
$V_n > 161$	1.0	1.5

Table.3.Harmonic Voltage Distortion Limits in Percent of Nominal Fundamental Frequency Voltage

- This standard divides the responsibility for limiting harmonics between both end users and the utility.
- End users will be responsible for limiting the harmonic current injections, while the utility will be primarily responsible for limiting voltage distortion in the supply system.
- The harmonic current and voltage limits are applied at the PCC.
- PCC (Point of Common Coupling) is the point where other customers share the same bus or where new customers may be connected in the future.
- The standard seeks a fair approach to allocating a **harmonic limit** quota for each customer.
- The standard allocates current injection limits based on the size of the load with respect to the size of the power system.

- The short-circuit ratio is defined as the ratio of the maximum short-circuit current at the PCC to the maximum demand load current (fundamental frequency component) at the PCC as well.

3.10.2 IEC 61000-2-2

- IEC 61000-2-2 defines compatibility levels for low-frequency conducted disturbances and signaling in public low-voltage power supply systems such as 50- or 60-Hz single- and three-phase systems with nominal voltage up 240 and 415 V, respectively.
- Compatibility levels are defined practically such that they reduce the number of complaints of misoperation to an acceptable level.

3.10.3 IEC 61000-3-2 and IEC 61000-3-4

- IEC 61000-3-2 and IEC 61000-3-4 defines limit for harmonic current emission from equipment drawing input current of up to and including 16 A per phase and larger than 16 A per phase.
- These standards are aimed at limiting harmonic emissions from equipment connected to the low-voltage public network.

3.10.4 IEC 61000-3-6

- IEC 61000-3-6 specifies limits of harmonic current emission for equipment connected to medium-voltage (MV) and high-voltage (HV) supply systems.
- The standard argues that emission limits for individual equipment connected to the MV and HV systems should be evaluated on the voltage distortion basis.
- This is to prevent excessive amounts of voltage distortion from harmonic current injections from harmonic-producing equipment.

3.10.5 NRS 048-2

- The Quality of Supply Standard, NRS 048, is the South African standard for dealing with the **quality of electricity supply** and has been implemented since July 1, 1997.
- This standard requires electricity suppliers to measure and report their quality of supply to the National Electricity Regulator (NER).
- NRS 048-02 adopts IEC 61000-2-2 harmonic voltage limits as its compatibility standards for LV and MV systems.

3.10.6 EN50160.14

- The standard defines **specific levels of voltage characteristics** that must be met by utilities and methods for evaluating compliance.
- EN 50160 was approved by the European Committee for Electro technical Standardization in 1994.
- EN 50160 specifies voltage characteristics at the customer's supply terminals or in public LV and MV electricity distribution systems under normal operating conditions.
- Note that limits in EN 50160 are nearly identical to the IEC 61000-3-6 compatibility levels for harmonic voltages for its corresponding LV and MV systems.

Department of Electrical & Electronics Engineering

IV B.Tech I Semester

POWER QUALITY (23A027HT)

(Electrical and Electronics Engineering)

Unit-IV (Power Quality Monitoring)

Syllabus:

Power quality benchmarking, monitoring considerations, choosing monitoring locations, permanent power quality monitoring equipment, historical perspective of power quality measuring instruments. Power quality measurement equipment-types of instruments, assessment of power quality measurement data, power quality monitoring standards.

POWER QUALITY BENCHMARKING:

The original Electric Power Research Institute (EPRI) Distribution Power Quality (DPQ) project in the mid-1990s provided the first benchmarking of power quality levels on distribution systems across the United States. Subsequent efforts provided similar benchmarking of power quality on other power systems around the world. The work characterized steady-state power quality levels such as voltage regulation, harmonics, unbalance as well as voltage sags, momentary interruptions, and transient voltages.

"According to IEC 61000-4-30 Benchmarking is a standard that provides a convenient reference to make sure that different power systems are being characterized in a similar manner in terms of power quality characteristics."

Benchmarking of power quality continues to be very important just as benchmarking of reliability levels is critical for understanding the expected performance as a function of system characteristics and other parameters. The widespread deployment of continuous power

quality monitoring has made power quality benchmarking more of a continuous process. EPRI continues to coordinate ongoing power quality benchmarking efforts for both transmission and distribution systems. Important objectives of these efforts include:

- Provide a factual baseline for benchmarking of power delivery system performance required by regulatory bodies.
- Understand performance standards for transmission and distribution power quality and how these standards compare with national benchmarking baselines.
- Update existing benchmarks to include changes in load composition affecting the grid in ways that have not been adequately studied.
- Identify the ongoing effect of system design changes, such as increased number of variable loads (e.g., arc furnaces) and system.
- Identify the ongoing effect of system design changes, such as increased number of variable loads (e.g., arc furnaces) and system compensation (e.g., capacitors) that affect power quality levels and issues at both transmission and distribution levels.
- Identify broad power quality trends for transmission and distribution due to power electronics and efficient technologies.

Because of sensitive customer loads, there is a need to define the quality of electricity provided in a common and succinct manner that can be evaluated by the electricity supplier as well as by consumers or equipment suppliers.

One of the basic tenets of solving power quality problems is that disturbances in the electric power system are not restricted by legal boundaries. Power suppliers, power consumers, and equipment suppliers must work together to solve many problems. Before they can do that, they must understand the electrical environment in which end-use equipment

operates. This is necessary to reduce the long-term economic impact of inevitable power quality variations and to identify system improvements that can mitigate power quality problems.

Benchmarking Process:

Electric utilities throughout the world are embracing the concept of benchmarking service quality. Utilities realize that they must understand the levels of service quality provided throughout their distribution systems and determine if the levels provided are appropriate. This is certainly becoming more prevalent as more utilities contract with specific customers to provide a specified quality of service over some period of time. The typical steps in the power quality benchmarking process are:

1. Select benchmarking metrics: The EPRI RBM project defined several performance indices for evaluating the electric service quality.

2. Collect power quality data: This involves the placement of power quality monitors on the system and characterization of the performance of the system. A variety of instruments and monitoring systems have been recently developed to assist with this labor-intensive process.

3. Select the benchmark: This could be based on past performance, a standard adopted by similar utilities, or a standard established by a professional or standards organization such as the IEEE, IEC, ANSI, or NEMA.

4. Determine target performance levels: These are targets that are appropriate and economically feasible. Target levels may be limited to specific customers or customer groups and may exceed the benchmark values.

The benchmarking process begins with selection of the metrics to be used for benchmarking and evaluating service quality. The metrics could simply be estimated from

historical data such as average number of faults per mile of line and assuming the fault resulted in a certain number of sags and interruptions. However, electricity providers and consumers are increasingly interested in metrics that describe the actual performance for a given time period. The indices developed as part of the EPRI RBM project are calculated from data measured on the system by specialized instrumentation. The indices were defined for

- Short –duration rms variations. These are voltage sags, swells and interruptions of less than 1 min.
- Harmonic Distortion.
- Transient overvoltages. This category is largely capacitor switching transients, but could also include lightning induced transients.
- Steady-state voltage variations such as voltage regulation and phase balance.

POWER QUALITY MONITORING:

Power quality monitoring is the process of gathering, analyzing, and interpreting raw measurement data into useful information. The process of gathering data is usually carried out by continuous measurement of voltage and current over an extended period. The process of analysis and interpretation has been traditionally performed manually, but recent advances in signal processing and artificial intelligence fields have made it possible to design and implement intelligent systems to automatically analyze and interpret raw data into useful information with minimum human intervention.

Power quality monitoring programs are often driven by the demand for improving the system wide power quality performance. Many industrial and commercial customers have equipment that is sensitive to power disturbances, and, therefore, it is more important to understand the quality of power being provided. Examples of these facilities include computer networking and

telecommunication facilities, semiconductor and electronics manufacturing facilities, biotechnology and pharmaceutical laboratories, and financial data-processing centers.

Hence, in the last decade many utility companies have implemented extensive power quality monitoring programs.

MONITORING CONSIDERATION:

The monitoring objectives often determine the choice of monitoring equipment, triggering thresholds, methods for data acquisition and storage, and analysis and interpretation requirements. Several common objectives of power quality monitoring are summarized here.

Monitoring to characterize system performance:

This is the most general requirement. A power producer may find this objective important if it has the need to understand its system performance and then match that system performance with the needs of customers. System characterization is a proactive approach to power quality monitoring. By understanding the normal power quality performance of a system, a provider can quickly identify problems and can offer information to its customers to help them match their sensitive equipment's characteristics with realistic power quality characteristics.

Monitoring to characterize specific problems:

Many power quality service departments or plant managers solve problems by performing short-term monitoring at specific customer sites or at difficult loads. This is a reactive mode of power quality monitoring, but it frequently identifies the cause of equipment incompatibility, which is the first step to a solution.

Monitoring as part of an enhanced power quality service:

Many power producers are currently considering additional services to offer customers.

One of these services would be to offer differentiated levels of power quality to match the needs of specific customers. A provider and customer can together achieve this goal by modifying the power system or by installing equipment within the customer's premises. In either case, monitoring becomes essential to establish the benchmarks for the differentiated service and to verify that the utility achieves contracted levels of power quality.

Monitoring as part of predictive or just-in-time maintenance:

Power quality data gathered over time can be analyzed to provide information relating to specific equipment performance. For example, a repetitive arcing fault from an underground cable may signify impending cable failure, or repetitive capacitor-switching restrikes may signify impending failure on the capacitor-switching device. Equipment maintenance can be quickly ordered to avoid catastrophic failure, thus preventing major power quality disturbances which ultimately will impact overall power quality performance.

The monitoring program must be designed based on the appropriate objectives, and it must make the information available in a convenient form and in a timely manner (i.e., immediately). The most comprehensive monitoring approach will be a permanently installed monitoring system with automatic collection of information about steady-state power quality conditions and energy use as well as disturbances.

Monitoring as part of a facility site survey:

Site surveys are performed to evaluate concerns for power quality and equipment performance throughout a facility. The survey will include inspection of wiring and grounding concerns, equipment connections, and the voltage and current characteristics throughout the facility. Power quality monitoring, along with infrared scans and visual inspections, is an important part of the overall survey. The initial site survey should be designed to obtain as

much information as possible about the customer facility. This information is especially important when the monitoring objective is intended to address specific power quality problems. This information is summarized here.

1. Nature of the problems (data loss, nuisance trips, component failures, control system malfunctions, etc.)
2. Characteristics of the sensitive equipment experiencing problems (equipment design information or at least application guide information)
3. The times at which problems occur
4. Coincident problems or known operations (e.g., capacitor switching) that occur at the same time
5. Possible sources of power quality variations within the facility (motor starting, capacitor switching, power electronic equipment operation, arcing equipment, etc.)
6. Existing power conditioning equipment being used
7. Electrical system data (one-line diagrams, transformer sizes and impedances, load information, capacitor information, cable data, etc.)

Determining what to monitor:

Power quality encompasses a wide variety of conditions on the power system. Important disturbances can range from very high frequency impulses caused by lightning strokes or current chopping during circuit interruptions to long-term overvoltages caused by a regulator tap switching problem. The range of conditions that must be characterized creates challenges both in terms of the monitoring equipment performance specifications and in the data-collection requirements. The methods for characterizing the quality of ac power are important for the monitoring requirements. For instance, characterizing most transients requires high-

frequency sampling of the actual waveform. Voltage sags can be characterized with a plot of the rms voltage versus time. Outages can be defined simply by time duration. Monitoring to characterize harmonic distortion levels and normal voltage variations requires steady-state sampling with results analysis of trends over time. Extensive monitoring of all the different types of power quality variations at many locations may be rather costly in terms of hardware, communications charges, data management, and report preparation. Hence, the priorities for monitoring should be determined based on the objectives of the effort. Projects to benchmark system performance should involve a reasonably complete monitoring effort. Projects designed to evaluate compliance with IEEE Standard 519-1992 for harmonic distortion levels may only require steady-state monitoring of harmonic levels. Other projects focused on specific industrial problems may only require monitoring of rms variations, such as voltage sags.

CHOOSING MONITORING LOCATIONS:

Obviously, we would like to monitor conditions at virtually all locations throughout the system to completely understand the overall power quality. However, such monitoring may be prohibitively expensive and there are challenges in data management, analysis, and interpretation. Fortunately, taking measurements from all possible locations is usually not necessary since measurements taken from several strategic locations can be used to determine characteristics of the overall system. Thus, it is very important that the monitoring locations be selected carefully based on the monitoring objectives.

When a monitoring project involves characterizing specific power quality problems that are actually being experienced by customers on the distribution system, the monitoring locations should be at actual customer service entrance locations because it includes the

effect of step- down transformers supplying the customer. Data collected at the service entrance can also characterize the customer load current variations and harmonic distortion levels. Monitoring at customer service entrance locations has the additional advantage of reduced transducer costs. In addition, it provides indications of the origin of the disturbances, i.e., the utility or the customer side of the meter.

Another important aspect of the monitoring location when characterizing specific power quality problems is to locate the monitors as close as possible to the equipment affected by power quality variations. It is important that the monitor sees the same variations that the sensitive equipment sees. High-frequency transients, in particular, can be significantly different if there is significant separation between the monitor and the affected equipment.

A good compromise approach is to monitor at the substation and at selected customer service entrance locations. The substation is important because it is the PCC for most rms voltage variations. The voltage sag experienced at the substation during a feeder fault is experienced by all the customers on other feeders supplied from the same substation bus. Customer equipment sensitivity and location on a feeder together determine the service entrance locations for monitoring. For instance, it is valuable to have a location immediately downline from each protective device on the feeder.

OPTIONS FOR PERMANENT POWER QUALITY MONITORING EQUIPMENT:

Permanent power quality monitoring systems, such as the system illustrated in Fig. 4.1, should take advantage of the wide variety of equipment that may have the capability to record power quality information. Some of the categories of equipment that can be incorporated into an overall monitoring system include the following:

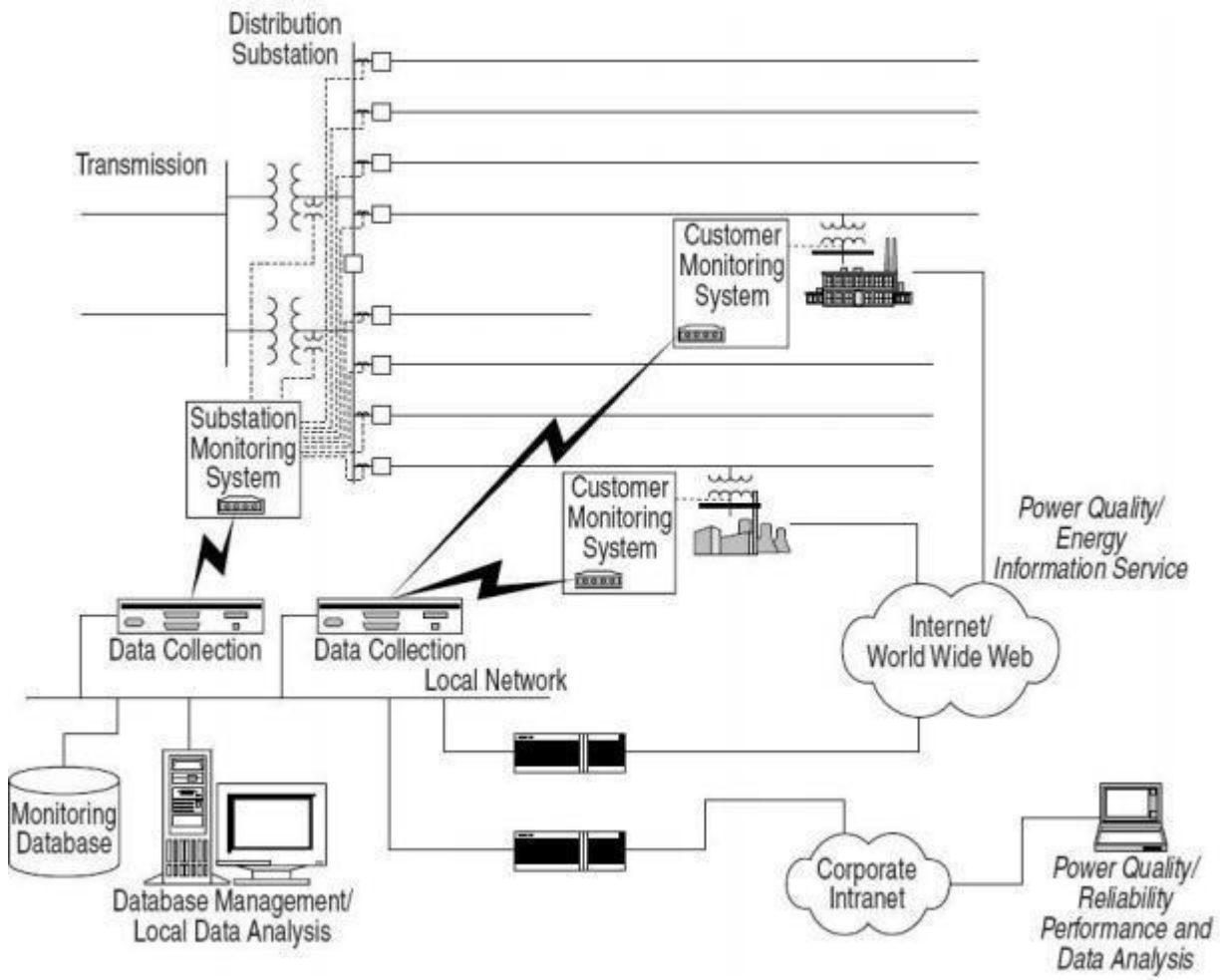

Figure 4.1 Illustration of system power quality monitoring concept with monitoring at the substation and selected customer locations.

Digital fault recorders (DFRs): These may already be in place at many substations. DFR manufacturers do not design the devices specifically for power quality monitoring. However, a DFR will typically trigger on fault events and record the voltage and current waveforms that characterize the event. This makes them valuable for characterizing rms disturbances, such as voltage sags, during power system faults. DFRs also offer periodic waveform capture for calculating harmonic distortion levels.

Smart relays and other IEDs: Many types of substation equipment may have the capability to be an intelligent electronic device (IED) with monitoring capability. Manufacturers of devices

like relays and re closers that monitor the current anyway are adding on the capability to record disturbances and make the information available to an overall monitoring system controller. These devices can be located on the feeder circuits as well as at the substation.

Voltage recorders: Power providers use a variety of voltage recorders to monitor steady-state voltage variations on distribution systems. We are encountering more and more sophisticated models fully capable of characterizing momentary voltage sags and even harmonic distortion levels. Typically, the voltage recorder provides a trend that gives the maximum, minimum, and average voltage within a specified sampling window. With this type of sampling, the recorder can characterize a voltage sag magnitude adequately. However, it will not provide the duration with a resolution less than 2 s.

In-plant power monitors: It is now common for monitoring systems in industrial facilities to have some power quality capabilities. These monitors, particularly those located at the service entrance, can be used as part of a utility monitoring program. Capabilities usually include wave shape capture for evaluation of harmonic distortion levels, voltage profiles for steady-state rms variations, and triggered wave shape captures for voltage sag conditions. It is not common for these instruments to have transient monitoring capabilities.

HISTORICAL PERSPECTIVE OF POWER QUALITY MEASURING INSTRUMENTS:

Early monitoring devices were bulky, heavy boxes that required a screwdriver to make selections. Data collected were recorded on strip-chart paper. One of the earliest power quality monitoring instruments is a lightning strike recorder developed by General Electric in the 1920s. The instrument makes an impulse-like mark on strip-chart paper to record a lightning strike event along with its time and date of occurrence. The data were more qualitative than quantitative, making the data interpretation rather difficult. The principal

component of the device consisted of a windup clockwork motor that moved the strip of paper from one spool to another and a pair of electrodes that struck an arc across the paper.

Significant development on power quality devices was not made until the 1960s when Martzloff developed a surge counter that could capture a voltage waveform of lightning strikes. The device consisted of a high persistence analog oscilloscope with a logarithmic sweep rate. The improvement of this device over its predecessor was that the recorded data were quantitative (voltage waveforms) as opposed to qualitative (marks on strip charts). By the mid-1960s, limitations of power quality devices relating to the trigger mechanism and the preset frequency response were well understood.

Many engineers consider that the first generation of power quality monitors began in the mid-1970s when Dranetz Engineering Laboratories (now Dranetz-BMI) introduced the Series 606 power line disturbance analyzer. This was a microprocessor-based monitor-analyzer first manufactured in 1975, and many units are still in service. The output of these monitors was text-based, printed on a paper tape. The printout described a disturbance by the event type (sag, interruption, etc.) and voltage magnitude. These monitors had limited functionalities compared to modern monitors, but the triggering mechanics were already well developed.

Second-generation power quality instruments debuted in the mid-1980s. This generation of power quality monitors generally featured full graphic display and digital memory to view and store captured power quality events, including both transients and steady-state events. Some instruments had a capability of transmitting data from a remote monitoring site to a central location for further analysis. Second-generation power quality instruments virtually had perfected the basic requirements of the triggering mechanism. Since the occurrence of a power quality disturbance is highly unpredictable, data must be continuously recorded and

processed without any dead time. Complex triggering engines determine what data and how much data should be saved to the digital memory. Trigger methods include fixed and floating limits and sensitivities, wave shape changes, and specific event characteristic parameters. These methods optimize the probability that what is important to the user will be captured and stored.

By the mid-1990s, the third-generation power quality instruments emerged. The development of the third-generation power monitors was inspired in part by the EPRI DPQ project. This generation of monitors was more appropriate as part of a complete power quality monitoring system, and the software systems to collect and manage the data were also developed. Since the conclusion of the project, substantial field experience gained revealed some of the difficulties in managing a large system of power quality monitors.

1. Managing the large volume of raw measurement data that must be collected, analyzed, and archived becomes a serious challenge as the number of monitoring points grows.
2. The data volume collected at each monitoring point can strain communication mechanisms employed to move that data from monitor to analysis point.
3. As understanding of system performance grows through the feedback provided by the monitoring data, detailed views of certain events, such as normal capacitor switching, become less valuable and would be of more use in a summary or condensed form.
4. The real value of any monitoring system lies in its ability to generate information rather than in collecting and storing volumes of detailed raw data.

Based on the experience gained from the EPRI DPQ project, it was realized that the information system aspect of a power monitoring program plays a very important role in tracking power quality performance. Thus, the development of the most recent generation of

power quality monitors was geared toward meeting the new information system demand, i.e., to be able to discover knowledge or information from the collected data as they are captured and to disseminate the information rapidly. This type of instrument employs expert system and advanced communication technologies.

POWER QUALITY MEASUREMENT EQUIPMENT:

They include everything from very fast transient over voltages (microsecond time frame) to long-duration outages. Power quality problems also include steady-state phenomena, such as harmonic distortion, and intermittent phenomena, such as voltage flicker.

Types of instruments:

Although instruments have been developed that measure a wide variety of disturbances, a number of different instruments may be used, depending on the phenomena being investigated.

Basic categories of instruments that may be applicable include

- Wiring and grounding test devices
- Multimeters
- Oscilloscopes
- Disturbance analyzers
- Harmonic analyzers and spectrum analyzers
- Combination disturbance and harmonic analyzers
- Flicker meters
- Energy monitors

Besides these instruments, which measure steady-state signals or disturbances on the power system directly, there are other instruments that can be used to help solve power quality problems by measuring ambient conditions:

1. Infrared meters can be very valuable in detecting loose connection sand overheating conductors. An annual procedure of checking the system in this manner can help prevent power quality problems due to arcing, bad connections, and overloaded conductors.

2. Noise problems related to electromagnetic radiation may require measurement of field strengths in the vicinity of affected equipment. Magnetic gauss meters are used to measure magnetic field strengths for inductive coupling concerns. Electric field meters can measure the strength of electric fields for electrostatic coupling concerns.

3. Static electricity meters are special-purpose devices used to measure static electricity in the vicinity of sensitive equipment. Electrostatic discharge (ESD) can be an important cause of power quality problems in some types of electronic equipment.

Regardless of the type of instrumentation needed for a particular test, there are a number of important factors that should be considered when selecting the instrument. Some of the more important factors include

- Number of channels (voltage and/or current)
- Temperature specifications of the instrument
- Ruggedness of the instrument
- Input voltage range (e.g., 0 to 600 V)
- Power requirements
- Ability to measure three-phase voltages
- Input isolation (isolation between input channels and from each input to ground)

- Ability to measure currents
- Housing of the instrument (portable, rack-mount, etc.)
- Ease of use (user interface, graphics capability, etc.)
- Documentation
- Communication capability (modem, network interface)
- Analysis software

The flexibility (comprehensiveness) of the instrument is also important. The more functions that can be performed with a single instrument, the fewer the number of instruments required

Wiring and grounding testers:

Many power quality problems reported by end users are caused by problems with wiring and/or grounding within the facility. These problems can be identified by visual inspection of wiring, connections, and panel boxes and also with special test devices for detecting wiring and grounding problems.

Important capabilities for a wiring and grounding test device include

- Detection of isolated ground shorts and neutral-ground bonds
- Ground impedance and neutral impedance measurement or indication
- Detection of open grounds, open neutrals, or open hot wires
- Detection of hot/neutral reversals or neutral/ground reversals

Three-phase wiring testers should also test for phase rotation and phase-to-phase voltages. These test devices can be quite simple and provide an excellent initial test for circuit integrity. Many problems can be detected without the requirement for detailed monitoring using expensive instrumentation.

Multimeters:

After initial tests of wiring integrity, it may also be necessary to make quick checks of the voltage and/or current levels within a facility. Overloading of circuits, under voltage and overvoltage problems, and unbalances between circuits can be detected in this manner. These measurements just require a simple multi meter. Signals used to check for these include

- Phase-to-ground voltages
- Phase-to-neutral voltages
- Neutral-to-ground voltages
- Phase-to-phase voltages (three-phase system)
- Phase currents
- Neutral currents

The most important factor to consider when selecting and using a multimeter is the method of calculation used in the meter. All the commonly used meters are calibrated to give an rms indication for the measured signal. However, a number of different methods are used to calculate the rms value. The three most common methods are

1. Peak method: Assuming the signal to be a sinusoid, the meter reads the peak of the signal and divides the result by 1.414 (square root of 2) to obtain the rms.

2. Averaging method: The meter determines the average value of a rectified signal. For a clean sinusoidal signal (signal containing only one frequency), this average value is related to the rms value by a constant.

3. True rms: The rms value of a signal is a measure of the heating that will result if the voltage is impressed across a resistive load. One method of detecting the true rms value is to actually use a thermal detector to measure a heating value. More modern digital meters use a

digital calculation of the rms value by squaring the signal on a sample by-sample basis, averaging over the period, and then taking the square root of the result. These different methods all give the same result for a clean, sinusoidal signal but can give significantly different answers for distorted signals. This is very important because significant distortion levels are quite common especially for phase to neutral currents within the facility. Table below illustrate this point better.

		Meter Type		
		True RMS	Peak Method	Average Responding
		Circuit Type		
		RMS Converter	Peak / 1.414	Sine Avg. X 1.11
Sine Wave	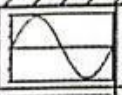	100 %	100 %	100 %
Square Wave	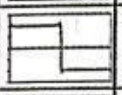	100 %	82 %	110 %
Triangle Wave	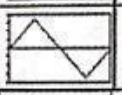	100 %	121 %	96 %
ASD Current	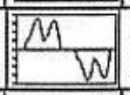	100 %	127 %	86 %
PC Current	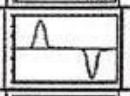	100 %	184 %	60 %
Light Dimmer	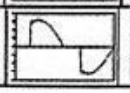	100 %	113 %	84 %

Comparison of Methods for Measuring Voltages and Currents with Multimeters

Digital cameras:

Photographs are extremely useful for documentation purposes. Those conducting the measurements often get distracted trying to get instruments to function properly and tests coordinated. They are rushed and fail to 'write down certain key data that later turn out to be important. Unfortunately, human memory is unreliable when there are dozens of measurement details to remember. The modern digital camera has become an indispensable

tool when taking field measurements. It is a simple matter to take photographs to document the tests. The photographer can immediately tell if the shot failed and retake it with a different exposure. Typical items to record photographically during field measurements include

1. Nameplates of transformers motors, etc.
2. Instrumentation setups
3. Transducer and probe connections
4. Key waveform displays from instruments
5. Substations, switchgear arrangements, arrester positions, etc.
6. Dimensions of key electrical components such as cable lengths

Video cameras are similarly useful when there is moving action or random events. For example, they may be used to help identify the locations of flashovers. Many industrial facilities will require special permission to take photographs and may place stringent limitations on the distribution of any photographs.

Oscilloscopes:

An oscilloscope is valuable when performing real-time tests. Looking at the voltage and current waveforms can provide much information about what is happening, even without performing detailed harmonic analysis on the waveforms. One can get the magnitudes of the voltages and currents, look for obvious distortion, and detect any major variations in the signals. There are numerous makes and models of oscilloscopes to choose from. A digital oscilloscope with data storage is valuable because the waveform can be saved and analyzed. Oscilloscopes in this category often also have waveform analysis capability (energy calculation, spectrum analysis). In addition, the digital oscilloscopes can usually be obtained

with communications so that waveform data can be uploaded to a personal computer for additional analysis with a software package.

The latest developments in oscilloscopes are hand-held instruments with the capability to display waveforms as well as performing some signal processing. These are quite useful for power quality investigations because they are very portable and can be operated like a voltohm meter (VOM), but yield much more information. These are ideal for initial plant surveys. This particular instrument also has the capability to analyze harmonics and permits connection with personal computers for further data analysis.

Disturbance analyzers:

Disturbance analyzers and disturbance monitors form a category of instruments that have been developed specifically for power quality measurements. They typically can measure a wide variety of system disturbances from very short duration transient voltages to long-duration outages or under voltages. Thresholds can be set and the instruments left unattended to record disturbances over a period of time. The information is most commonly recorded on a paper tape, but many devices have attachments so that it can be recorded on disk as well.

There are basically two categories of these devices:

1. **Conventional analyzers** that summarize events with specific information such as overvoltage and undervoltage magnitudes, sags and surge magnitude and duration, transient magnitude and duration, etc.
2. **Graphics-based analyzers** that save and print the actual waveform along with the descriptive information which would be generated by one of the conventional analyzers

It is often difficult to determine the characteristics of a disturbance or a transient from the summary information available from conventional disturbance analyzers. For instance, an oscillatory transient cannot be effectively described by a peak and duration. Therefore, it is almost imperative to have the waveform capture capability of a graphics-based disturbance analyzer for detailed analysis of a power quality problem (Fig. 4.2). However, a simple conventional disturbance monitor can be valuable for initial checks at a problem location.

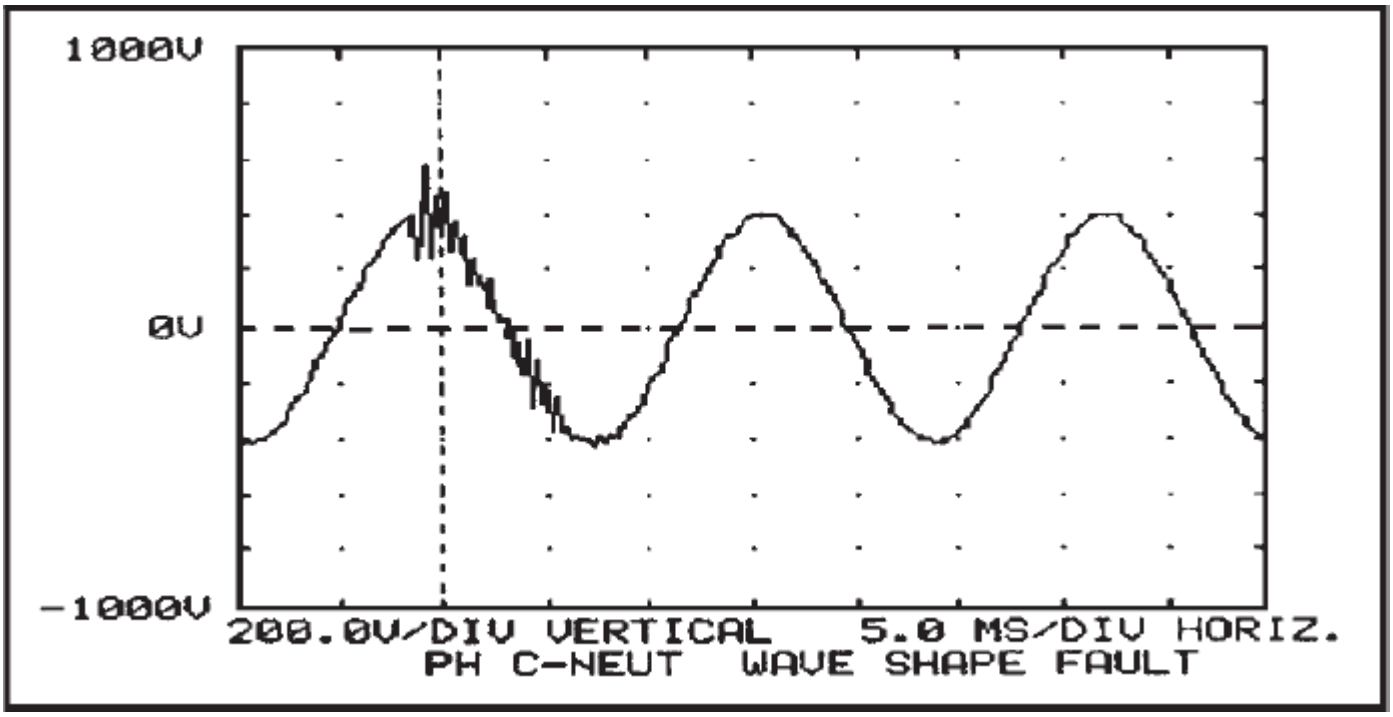

Figure 4.2 Graphics-based analyzer output.

Spectrum analyzers and harmonic analyzers:

Harmonic analyzers have several capabilities. They capture harmonic waveforms and display them on a screen. They calculate the K factor to de rate transformers and the total harmonic distortion (THD) in percent of the fundamental. They also measure the corresponding frequency spectrum, i.e., the harmonic frequency associated with the current and voltage up to the fiftieth harmonic.

They display the harmonic frequency on a bar graph or as the signal's numerical values. Some measure single-phase current and voltage while others measure three-phase current and voltage. All of them measure the power factor (PF). The power factor provides a measurement of how much of the power is being used efficiently for useful work. Some can store data for a week or more for later transfer to a PC for analysis.

This makes them powerful tools in the analysis of harmonic power quality problems. Some of the more powerful analyzers have add-on modules that can be used for computing fast Fourier transform (FFT) calculations to determine the lower-order harmonics. However, any significant harmonic measurement requirements will demand an instrument that is designed for spectral analysis or harmonic analysis. Important capabilities for useful harmonic measurements include Capability to measure both voltage and current simultaneously so that harmonic power flow information can be obtained.

- Capability to measure both magnitude and phase angle of individual harmonic components
- Synchronization and a sampling rate fast enough to obtain accurate measurement of harmonic components up to at least the 37th harmonic (this requirement is a combination of a high sampling rate and a sampling interval based on the 60-Hz fundamental).
- Capability to characterize the statistical nature of harmonic distortion levels (harmonics levels change with changing load conditions and changing system conditions).

There are basically three categories of instruments to consider for harmonic analysis:

1. Simple meters: It may sometimes be necessary to make a quick check of harmonic levels at a problem location. A simple, portable meter for this purpose is ideal. There are now several hand-held instruments of this type on the market. Each instrument has advantages and disadvantages in its operation and design. These devices generally use microprocessor-

based circuitry to perform the necessary calculations to determine individual harmonics up to the 50th harmonic, as well as the rms, the THD, and the telephone influence factor (TIF). Some of these devices can calculate harmonic powers (magnitudes and angles) and can upload stored waveforms and calculated data to a personal computer.

2. General-purpose spectrum analyzers: Instruments in this category are designed to perform spectrum analysis on waveforms for a wide variety of applications. They are general signal analysis instruments. The advantage of these instruments is that they have very powerful capabilities for a reasonable price since they are designed for a broader market than just power system applications. The disadvantage is that they are not designed specifically for sampling power frequency waveforms and, therefore, must be used carefully to assure accurate harmonic analysis. There are a wide variety of instruments in this category.

3. Special-purpose power system harmonic analyzers: Besides the general-purpose spectrum analyzers just described, there are also a number of instruments and devices that have been designed specifically for power system harmonic analysis. These are based on the FFT with sampling rates specifically designed for determining harmonic components in power signals. They can generally be left in the field and include communications capability for remote monitoring.

Combination disturbance and harmonic analyzers:

The most recent instruments combine harmonic sampling and energy monitoring functions with complete disturbance monitoring functions as well. The output is graphically based, and the data are remotely gathered over phone lines into a central database. Statistical analysis can then be performed on the data. The data are also available for input and manipulation into other programs such as spreadsheets and other graphical output processors. This instrument

is designed for both utility and end-user applications, being mounted in a suitable enclosure for installation outdoors on utility poles. It monitors three-phase voltages and currents (plus neutrals) simultaneously, which is very important for diagnosing power quality problems. The instrument captures the raw data and saves the data in internal storage for remote downloading. Off-line analysis is performed with powerful software that can produce a variety of outputs.

ASSESSMENT OF POWER QUALITY MEASUREMENT DATA:

As utilities and industrial customers have expanded their power quality monitoring systems, the data management, analysis, and interpretation functions have become the most significant challenges in the overall power quality monitoring effort. In addition, the shift in the use of power quality monitoring from off-line benchmarking to on-line operation with automatic identification of problems and concerns has made the task of data management and analysis even more critical.

There are two streams of power quality data analysis, i.e., off-line and on-line analyses. The off-line power quality data analysis, as the term suggests, is performed off-line at the central processing locations. On the other hand, the on-line data analysis is performed within the instrument itself for immediate information dissemination.

Off-Line Power Quality Data Assessment:

Off-line power quality data assessment is carried out separately from the monitoring instruments. Dedicated computer software is used for this purpose. Large-scale monitoring projects with large volumes of data to analyze often present a challenging set of requirements for software designers and application engineers. First, the software must integrate well with monitoring equipment and the large number of productivity tools that are currently available.

The storage of vast quantities of both disturbance and steady-state measurement data requires an efficient and well-suited database. Data management tools that can quickly characterize and load power quality data must be devised, and analysis tools must be integrated with the database. Automation of data management and report generation tasks must be supported and the design must allow for future expansion and customizing.

The new standard format for interchanging power quality data— the Power Quality Data Interchange Format (PQDIF)—makes sharing of data between different types of monitoring systems much more feasible. This means that applications for data management and data analysis can be written by third parties and measurement data from a wide variety of monitoring systems can be accessible to these systems.

The off-line power quality data assessment software usually performs the following functions:

- Viewing of individual disturbance events.
- RMS variation analysis which includes tabulations of voltage sags and swells, magnitude-duration scatter plots based on CBEMA, ITI, or user-specified magnitude-duration curves, and computations of a wide range of rms indices such as SARFI, SIARFI, and CAIDI.
- Steady-state analysis which includes trends of rms voltages, rms currents, and negative- and zero-sequence unbalances. In addition, many software systems provide statistical analysis of various minimum, average, maximum, standard deviation, count, and cumulative probability levels. Statistics can be temporally aggregated and dynamically filtered. Figures 4.3 and 4.4 show the time trend of phase A rms voltage along with its histogram representation.

- Harmonic analysis where users can perform voltage and current harmonic spectra, statistical analysis of various harmonic indices, and trending overtime.
- Transient analysis which includes statistical analysis of maximum voltage, transient durations transient frequency.

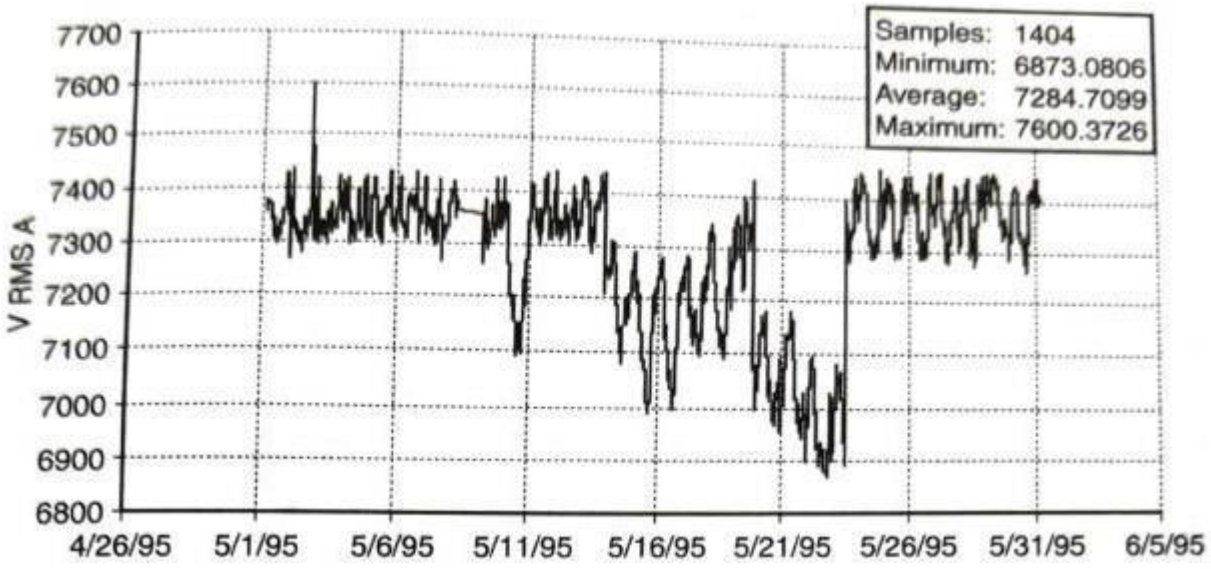

Figure 4.3 RMS voltage vs time plot generated by power system analysis software programs.

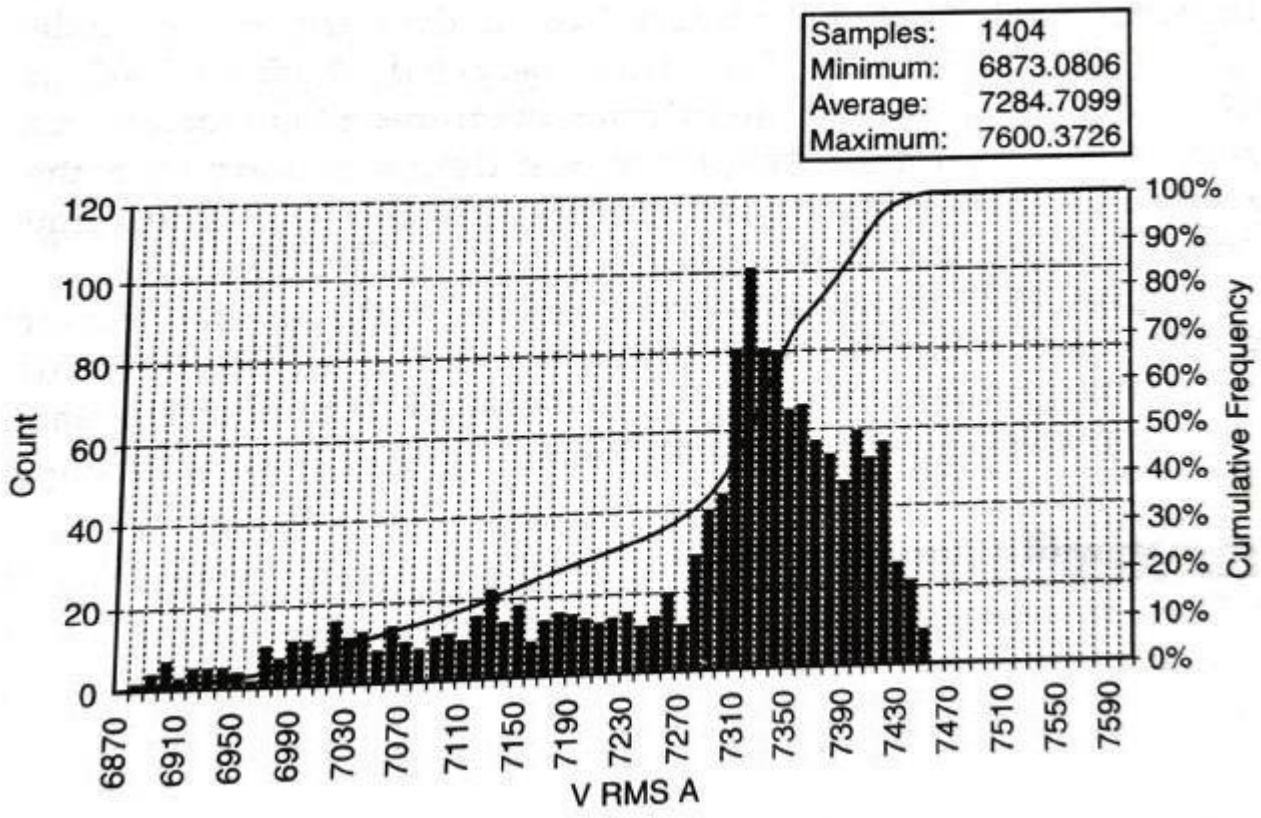

Figure 4.3 Histogram representation of rms voltage indicates the statistical distribution of the rms voltage magnitude.

- Standardized power quality reports (e.g. daily reports, monthly reports, statistical performance reports, executive summaries, customer power quality summaries).
- Analysis of protective device operation (identify problems).
- Analysis of energy use.
- Correlation of power quality levels or energy use with important parameters (e.g., voltage sag performance versus lightning flash density).
- Equipment performance as a function of power quality levels (equipment sensitivity reports).

On-Line Power Quality Data Assessment:

On-line power quality data assessment analyzes data as they are captured. The analysis results are available immediately for rapid dissemination. Complexity in the software design requirement for on-line assessment is usually higher than that of off-line. Most features available in off-line analysis software can also be made available in an on-line system. One of the primary advantages of on-line data analysis is that it can provide instant message delivery to hotify users of specific events of interest. Users can then take immediate actions upon receiving the notifications. For example a simple message delivered to a user reporting that a capacitor bank located upstream from a data acquisition node called "Data Node H09_5530" was energized at 05-15-2002 at 04:56:11 a.m. The message also details the transient characteristics such as the magnitude, frequency, and duration along with the relative location of the capacitor bank from the data acquisition node.

Another example of the on-line power quality assessment. It shows the time trend of a fifth-harmonic current magnitude along with its statistical distribution. The data and its analysis are displayed on a standard Web browser. Here a to user can analyze data up to the current time. This on-line system has the capability of performing a full range of transient, harmonic, and steady-state characterization along with their statistical distribution analysis comparable to that in off-line assessment analysis.

POWER QUALITY MONITORING STANDARDS:

Standards are very important in the area of power quality monitoring. Power quality levels must be defined consistently and characterized using the same methods if they are going to be compared from one site to another and from one system to another. IEEE 1159 is the IEEE

Working Group that coordinates the development of power quality monitoring standards. The existing IEEE 1159 provides general guidelines and definitions for monitoring power quality, and there are three separate task forces that are working on more specific guidelines and requirements. Much of this work is being coordinated with IEC activities so that the monitoring requirements can be more consistent internationally. This section describes: the most important IEEE and IEC standards. These standards are a moving target as there are many groups working on new developments.

IEEE 1159: Guide for power quality monitoring

IEEE Standard 115915 was developed to provide general guidelines for power quality measurements and to provide standard definitions for the different categories of power quality problems. Power quality monitoring equipment can use this language to correctly differentiate between different power quality variations and disturbances.

The IEEE 1159.1 Working Group is developing guidelines for instrumentation requirements associated with different types of power quality phenomena. These requirements address issues like sampling rate requirements, synchronization, A/D sampling accuracy, and number of cycles to sample.

The IEEE 1159.2 Working Group is developing guidelines for characterizing different power quality phenomena. This includes definition of important characteristics that may relate to the impacts of the power quality variations (such as minimum magnitude, duration, phase shift and number of phases for voltage sags). Example waveforms have been collected illustrating the importance of different characteristics of the power quality variations.

Recently, the work of the IEEE 1159.1 and 1159.2 Working Groups has been combined into a single task force and is being coordinated with the development of an international

standard for characterizing power quality variations with monitoring equipment—IEC 61000-4-30.

The IEEE 1159.3 Working Group is defining an interchange format that can be used to exchange power quality monitoring information between different applications. IEEE developed the COMTRADE format for exchanging waveform data between fault recorders and other applications, such as relay testing equipment. A more complete data interchange format is needed for power quality data, which can include harmonic spectra, rms envelopes, characterized power quality data, and statistical power quality data, as well as steady-state and disturbance waveforms. The new Power Quality Data Interchange Format (PQDIF) has been defined, and the standard is being balloted at the time of this writing. The common data interchange format will allow software developers to develop applications for analyzing power quality events and problems independently from the manufacturers of the actual power quality monitoring equipment.

IEC 61000-4-30: Testing and Measurement Techniques—Power Quality Measurement Methods

IEC standards for monitoring power quality phenomena are provided in a series of documents with the numbers 61000-4-xx. The individual standards in this series cover specific requirements for each type of power quality variation or concern. For instance, IEC 61000-4-7 provides the specifications for monitoring harmonic distortion levels. IEC 61000-4-15 provides the specifications for monitoring flicker. The overall requirements for characterizing power quality phenomena are summarized in a new standard that is just being completed within IEC (61000-4-30). This new standard refers to the appropriate individual standards (like 61000-4-7 and 61000-4-15) for detailed specifications where appropriate.

This standard provides detailed requirements for the measurement procedures and the accuracy requirements of the measurements. Not all monitoring equipment will be able to meet the exact requirements of this standard. As a result, two classes of measurement equipment have been defined to be considered compliant with the procedures of IEC 61000-4-30.

- Class A performance is for measurements where very precise accuracy is required. Two instruments that comply with the requirements of class A should give the same results (within the specified levels of accuracy) for any of the types of power quality variations considered. These instruments could be appropriate for laboratories or for special applications where highly precise results are required.
- Class B performance still indicates that the recommended procedures for characterizing power quality variations are used but that the exact accuracy requirements may not be met. These instruments are appropriate for most system power quality monitoring (surveys, troubleshooting, characterizing performance, etc.).

The concept of aggregation is also introduced in this standard. Aggregation is used so that multiple measurements that are associated with essentially the same event are not counted multiple times. For example multiple voltage sags caused by reclosing operations should only be counted as a single event for evaluating the impact on customers and the number of problem events on the system. Three different aggregation intervals are defined in IEC 61000-4-30: 3 s, 10 min, and 2 h.

As mentioned, the work in IEC 61000-4-30 is also becoming the basis for updates and enhancements to the IEEE power quality monitoring standards (IEEE 1159 series). This is part of the general trend toward internationalizing power quality standards. These aggregation

periods are also very important intervals for characterizing steady-state power quality variations like voltage magnitude, unbalance, harmonics, and flicker. All these quantities are described statistically using 10-min values as the most important quantity.

Note that the basic measurement period for the steady-state power quality parameters is 200 ms. This permits characterization of interharmonics in 5-Hz bins, and it provides some smoothing of very fast changes that should not be considered part of steady-state power quality performance. Of course, voltage sags and transients are characterized with actual waveforms and rms versus time plots.

Department of Electrical & Electronics Engineering

IV B.Tech I Semester

POWER QUALITY (20A271T)

(Electrical and Electronics Engineering)

Unit-V (Distributed Generation and Grid Interconnection)

Syllabus:

Distributed generation -connection requirements and impacts on the network. Interaction and optimal location of DG-Eigen analysis and voltage interaction. Power quality in DG-Mitigation of voltage dip during motor start, harmonic effects with DG, voltage flicker and fluctuation. Islanding issues, distribution line compensation-heavy Load and Light load condition, real generation, protection issues for distributed generation, technologies for distributed generation, power quality impact from different DG types.

INTRODUCTION:

Throughout the 20th century economies of scale have driven generation plant sizes larger with single stations exceeding 3000 MW. A parallel trend is now developing with significantly smaller sized generation units connected at the distribution level. Several factors contribute to this trend.

Greenhouse gas issues are behind a push in many countries for encouraging the use of renewable energy. Many of the technologies draw upon dispersed energy such as solar, wind and wave which require many smaller sized units. The economies of local generation using gas in units such as micro turbines is approaching that of a central generation when the transmission and distribution overheads are taken into account. Fuel cells are still more expensive but are showing great promise for low cost reliable small size generation units.

Solar cells are inherently modular in small panels with large installations using more of the same panels. This provides limited opportunities for economies of scale.

DISTRIBUTED GENERATION - CONNECTION REQUIREMENTS AND IMPACTS ON THE NETWORK:

The move to open competitive markets in electricity has increased the uncertainties of supply. A notable example is customers saw increased cost of energy and rolling blackouts. In response to this uncertainty of central supply there was a massive increase in demand for back-up generation with the possibility of generation back into the grid when conditions were well suited. In medium sized industrial plants or large buildings with a significant heating load, co-generation is becoming more attractive. The local generation of electricity also provides waste heat that can supply much of the heating needs of the local process.

The voltage profile of lines with distributed loads and the impact of real or reactive power from one or more injection points need point compensation and the correction of the voltage or current at a particular location in the network. The consideration of real power injection is due to a developing trend for distributed generation (DG) and the need to consider their impacts on the distribution system.

This expansion of distributed generation has the potential to significantly change the nature of the distribution system and the associated power quality issues. Many of the technologies require an inverter stage for grid connection. The inverter is required for fuel cells and for solar cells since the source is inherently dc and needs to be converted to ac supply. Micro turbines operate at very high speeds. The use of direct connected generators that thus produce alternating voltage at a high frequency requires inverters to convert to the supply frequency. Many of the wind turbine systems are induction generators but the efficiencies of

variable speed turbines and the controllability of connection to weak grid points are encouraging a market in inverter connected wind generation systems.

Standards for Grid Connection:

This development and its potential for rapid expansion have prompted a lot of work on the development of standards for inverter connection to the grid. This prospective explosion of inverters connected to the grid has the potential for significant deterioration of the quality of supply for all users. The standards are aimed at limiting the adverse impact in the areas of harmonic injection from inverters and flicker generated by inverters. In addition, inverters should stop generation after the power utility has opened the main supply. Continued generation would constitute a hazard for the utility workers. This is referred to as anti-islanding protection.

Key Requirements in Standards:

The standard requires passive means of detection of islanding which includes under and over voltage protection and under and over frequency protection. Typically if an inverter is isolated with some load, then there will be a gross mismatch of real power leading the synchronization process to generate a lower and lower frequency. Once the frequency is outside the specified limits the inverter will trip. If there is a reactive power mismatch, the voltage will tend to stabilize outside the required voltage limits leading to an inverter trip.

The system is also required to trip in less than 2 sec even when there is real and reactive balance with the load. This requires an active method of detection of loss of supply. Examples of anti-islanding include:

- Shifting the frequency of the inverter away from nominal conditions in the absence of a reference frequency (frequency shift).

- Allowing the frequency of the inverter to be inherently unstable in the absence of a reference (frequency instability).
- Periodically varying the output power of an inverter (power variation).
- Monitoring for sudden changes in the impedance of the grid by periodically injecting a current pulse (current injection).

Grid Friendly Inverters:

In all the above issues, the controllability of inverters offers the potential for doing much more than limiting the worst effects on power quality. Any inverter operating at less than the rated real power can provide reactive power at comparatively low cost. These units have the potential for

- Distribution system voltage support
- Harmonic absorption
- Voltage dip reduction
- Flicker suppression
- Reduction of outages

These aspects are of particular importance in rural areas where the quality of supply is expected to be much lower than that of the urban areas. The voltage support can be provided using the additional capacity of the inverter. There are many modes in which an inverter can operate.

- One mode could include aiming to have zero harmonic voltage at the point of connection.

- Another would be to create a harmonic current absorption proportional to the harmonic voltage. In this mode the inverter would emulate a shunt resistor to the harmonic frequencies.

The dip suppression and flicker reduction would occur in the same way by supplying reactive power or short periods of real power to keep the terminal voltage close to its reference sine wave. For rural loads with one line of supply suffering high fault rates there is a much greater case for the development of islands fed from inverter or synchronous machine sources provided the available generation is sufficient for the expected load of the proposed island.

Angle Stability for Inverters:

While connecting a synchronous machine to supply, the stability of the connection is a significant issue. Inverters do not have the problem of rotor inertia while changing the angle of the injected voltage. In most cases the desirable solution is to synthesize the inverter current to be in phase with the mains voltage. The difficulty is in the process of synchronization of the reference to the actual voltage. When there is a sudden step of load downstream, the angle of the voltage at the connection point takes a step. For correct synthesis the usual solution of a phase locked loop to learn the phase of the voltage connection point often has a lag of several cycles with a corresponding distortion of the injection. This can be avoided by having them injected current to be a scaled version of the line voltage. This avoids any synchronization issue but will have a distorted injection of current whenever the voltage is distorted rather than the injection acting to correct for the distortion of the voltage.

Issues for Distributed Generation:

There are several aspects that need to be addressed to ensure quality of supply as the penetration of generation expands. The main issues at low levels of penetration are

- Impact on protection systems,
- Dynamic Interaction between generators and
- Conflict in voltage control for generators in proximity.

One aspect that has shown a potential for difficulties for some utilities is the use of fixed tap transformers which are preset based on expected loading patterns to achieve the best voltage profile. With significant DG on the feeder the reversal of the power flow can lead to transformers which used to provide a downstream boost is now providing an upstream voltage boost.

At high levels of DG penetration on a feeder the additional issue of scheduling of generation becomes important to avoid line overload and severe voltage rise problems. In some circumstances particularly for rural communities with poor supply reliability islanding may be an attractive proposition on failure of the main supply. When several generators are present in the island, generation control becomes essential for voltage and frequency stabilization. These requirements can be met without central control, but reconnection to the mains on restoration of supply needs a more precise frequency control if a smooth resynchronization is to be achieved.

INTERACTION AND OPTIMAL LOCATION OF DG:

The dynamics of distribution networks with distributed generation for different penetration scenarios and the impact of DG is assessed using both Eigen analysis and Individual Channel Analysis and Design (ICAD) for small-signal analysis, and non-linear time domain simulations for transient stability analysis. In this continuous time analysis of multi-machine scenarios, the participation of the generator subsystems: rotor dynamics, synchronous machine, an exciter and governor/turbine in the oscillation modes have been examined through modal analysis to

detect the degree of interaction. However, this report investigates longer-term dynamic interaction of voltage controller assuming the angle has reached its steady state.

Eigen Analysis and Voltage Interaction:

Let us assume that a single line system consists of N number of load buses and two distributed generators (DG1 and DG2) are connected at two different locations (for example, N-2 and N-6) with their internal buses N+ I and N+2 respectively. Bus voltage and current of this system are related as

$$Y_{BUS}V_{BUS} = I_{BUS} \quad \ldots\ldots\ldots \qquad (5.1)$$

Equation (5.1) can be expanded for the whole system as follows

$$\begin{bmatrix} y_{1,1} & y_{1,2} & \cdots & y_{1,N} & y_{1,N+1} & y_{N+2} \\ y_{2,1} & y_{2,2} & \cdots & y_{2,N} & y_{2,N+1} & y_{2,N+2} \\ \vdots & \vdots & \vdots & \vdots & \vdots & \vdots \\ y_{N,1} & y_{N,2} & \cdots & y_{N,N} & y_{N,N+1} & y_{N,N+2} \\ y_{N+1,1} & y_{N+1,2} & \cdots & y_{N+1,N} & y_{N+1,N+1} & y_{N+1,N+2} \\ y_{N+2,1} & y_{N+2,2} & \cdots & y_{N+2,N} & y_{N+2,N+1} & y_{N+2,N+2} \end{bmatrix} \begin{bmatrix} V_s \\ V_2 \\ \vdots \\ V_N \\ V_{DG1} \\ V_{DG2} \end{bmatrix} = \begin{bmatrix} I_s \\ 0 \\ \vdots \\ 0 \\ I_{DG1} \\ I_{DG2} \end{bmatrix} \quad \ldots\ldots\ldots\ldots(5.2)$$

Noting that the Y_{bus} is a symmetric matrix, (5.2) can be partitioned into sub matrices as

$$\begin{bmatrix} Y_1 & Y_2 & Y_4 \\ Y_2^T & Y_3 & Y_5 \\ Y_4^T & Y_5^T & Y_6 \end{bmatrix} \begin{bmatrix} V_s \\ V_x \\ V_{DG} \end{bmatrix} = \begin{bmatrix} I_s \\ 0 \\ I_{DG} \end{bmatrix} \quad \ldots\ldots\ldots\ldots(5.3)$$

Where

$$Y_1 = \begin{bmatrix} y_{1,1} \end{bmatrix}, \quad Y_2 = \begin{bmatrix} y_{1,2} & y_{1,3} & \cdots & y_{1,N} \end{bmatrix}, \quad Y_4 = \begin{bmatrix} y_{1,N+1} & y_{1,N+2} \end{bmatrix},$$

$$Y_3 = \begin{bmatrix} y_{2,2} & y_{2,2} & \cdots & y_{2,N} \\ \vdots & \vdots & \vdots & \vdots \\ y_{N,2} & y_{N,3} & \cdots & y_{N,N} \end{bmatrix}, \quad Y_5 = \begin{bmatrix} y_{2,N+1} & y_{2,N+2} \\ \vdots & \vdots \\ y_{N,N+1} & y_{N,N+2} \end{bmatrix},$$

$$Y_6 = \begin{bmatrix} y_{N+1,N+1} & y_{N+1,N+2} \\ y_{N+2,N+1} & y_{N+2,N+2} \end{bmatrix}, \quad V_x = \begin{bmatrix} V_2 \\ \vdots \\ V_N \end{bmatrix}, \quad V_{DG} = \begin{bmatrix} V_{DG1} \\ V_{DG2} \end{bmatrix}, \quad I_{DG} = \begin{bmatrix} I_{DG1} \\ I_{DG2} \end{bmatrix}$$

From Equation (5.3) we obtain

$$Y_2^T V_S + Y_3 V_X + Y_5 V_{DG} = 0 \qquad \text{.....(5.4)}$$

Rearranging the above equation we get

$$V_X = -Y_3^{-1}\left(Y_2^T V_S + Y_5 V_{DG}\right) \qquad \text{.....(5.5)}$$

By applying the principle of superposition, the relative changes of voltages due to DG injection can be obtained. By substituting $V_s = 0$ in (5.4) and examining the response of the system to 1.0 per unit voltage at DG1 and DG2 individually, we get

$$V'_{X_{DG1}} = -Y_3^{-1} Y_5 \begin{bmatrix} 1 \\ 0 \end{bmatrix} \quad \text{and} \quad V'_{X_{DG2}} = -Y_3^{-1} Y_5 \begin{bmatrix} 0 \\ 1 \end{bmatrix} \qquad \text{.....(5.6)}$$

The absolute values of relative changes of voltages at DG connection points can be extracted from the matrix in equation (5.6) as

$$A_{DG} = \begin{bmatrix} V^{Relative}_{DG1_{N-2-1}} & V^{Relative}_{DG1_{N-6-1}} \\ V^{Relative}_{DG2_{N-2-1}} & V^{Relative}_{DG2_{N-6-1}} \end{bmatrix} \qquad \text{.....(5.7)}$$

where N-2-1 and N-6-1 are the locations of relative changes of voltages for DGI and DG2 in the matrix of (5.6). Therefore, the measured voltages at DG connection points in this example system are

$$V_m = \begin{bmatrix} V_{m1} \\ V_{m2} \end{bmatrix} = A_{DGi} V_{DGi} \quad \text{.....(5.8)}$$

where V_{ml} and V_{m2} are the measured voltages for DG1 and DG2 respectively. For a close-loop control system with proportional control gain K_l for DG1 and K_2 for DG2, the DG voltages can be obtained as

$$V_{DGi1} = -K_1 \left(V_{m1} - V_{ref} \right) \quad \text{and} \quad V_{DGi2} = -K_2 \left(V_{m2} - V_{ref} \right) \quad \text{.....(5.9)}$$

where, V_{ref} is the reference voltage. DG voltages at the next stage are

$$V_{DGi}^{t+1} = V_{DGi}^{t} - KV_m - KV_{ref} \quad \text{.....(5.10)}$$

where

$$K = \begin{bmatrix} K_1 & 0 \\ 0 & K_2 \end{bmatrix}$$

If V_{ref} is assumed to be zero, (5.9) can be rearranged as

$$V_{DGi}^{t+1} = \left(I_2 - KA_{DGi} \right) V_{DGi}^{t} \quad \text{.....(5.11)}$$

where I_2 is a (2x2) identity matrix, V_{DGi}^{t+1} is the DG voltage at the next stage, k + 1 and V_{DGi}^{t} is the DG voltage at current stage k. Equation (5.11) is in the form of x(k + l) = Fx(k) and

therefore Eigen value analysis of coefficient matrix A can predict the level of interaction and system instability contributed by the DG.

Eigen analysis is useful for the analysis of small-signal stability of low frequency oscillations and for the design of corrective controls. The modes of oscillation can be clearly identified by Eigen values of the system matrix (A) at which the damping and frequency of each mode change with different operating conditions. The examination of eigenvectors of individual modes helps to determine the characteristics of modes and assists in developing mitigating measures. Eigen analysis of different DG locations in the network and different network loadings has been carried out in this study to predict interaction and system instability caused by DGs.

From (5.7), the indication of voltage interaction between two DGs in this example system can be observed and an Interaction Index can be introduced to predict the contribution of interaction by each DG. The diagonal elements of the matrix in (5.7) are the relative changes of self-voltages of DGs located at a particular location. The off-diagonal elements in each row are the relative changes of voltages at other locations contributed by DG located in the position that produces relative change of self-voltage in that row. Therefore, the ratio of off-diagonal and diagonal elements in the column can be defined as an Interaction Index that will indicate the interaction of DGs. For this example system, Interaction Index for DG1 interacting with DG2 is

$$Index_{DG1|2}^{Interaction} = \frac{V_{DG2_{N-2-1}}^{Relative}}{V_{DG1_{N-2-1}}^{Relative}} \qquad \text{.....(5.12)}$$

and the Interaction Index for DG2 interacting with DG1 is

$$Index_{DG2|1}^{Interaction} = \frac{V_{DG1_{X-6-1}}^{Relative}}{V_{DG2_{X-6-1}}^{Relative}}$$

……..(5.13)

Therefore, Interaction Index between two DGs can be generalized for a DG_1 at a location L interacting with DG_j as,

$$Index_{DGi|J}^{Interaction} = \frac{V_{DGj_{L-1}}^{Relative}}{V_{DGi_{L-1}}^{Relative}}$$

……(5.14)

The Interaction Index among multiple DGs can be generalized for a DG1 at a location L interacting with DG_j, DG_{j+1}, DG_{j+2}, ..., DG_{j+n} as

$$Index_{DGi|J,J+1,J+2,\ldots,J+n}^{Interaction} = \left[\frac{V_{DGj_{L-1}}^{Relative}}{V_{DGi_{L-1}}^{Relative}} \quad \frac{V_{DGj+1_{L-1}}^{Relative}}{V_{DGi_{L-1}}^{Relative}} \quad \frac{V_{DGj+2_{L-1}}^{Relative}}{V_{DGi_{L-1}}^{Relative}} \quad \ldots \quad \frac{V_{DGj+n_{L-1}}^{Relative}}{V_{DGi_{L-1}}^{Relative}} \right]$$

……..(5.15)

The individual element of the matrix in equation (5.15) will indicate the degree of interaction for a DG with other DGs in different locations. The index-elements in the above equation will give an indication of interaction. It to be is noted that for a stable system, the value of Interaction Index is very much less than 1.0 and close to 0. However, if the value of Index approaches 1.0, it would indicate that the system is close to instability. There is a critical limit for every network which depends on system parameters and loading. The network instability will occur if the network is loaded beyond this critical limit. This may be justified from Eigen value analysis by comparing the changes of magnitudes of Eigen values of the network.

POWER QUALITY IN DG:

The power quality issues related to DG integration in distribution networks such as

- Voltage dip transients
- Harmonics
- Voltage flicker

The distribution systems with DG installed are analyzed to ascertain the DG impact on power quality.

Mitigation of Voltage Dip during Motor Start:

One of the main power quality problems is voltage dip. Voltage dip is usually caused by sudden load demand, motor start, network fault etc. An induction motor can draw a starting current typically six times the normal current. But the network is designed based on the normal load current and to maintain voltage levels during all possible simultaneous motor starts is unjustified. Therefore, a minimum allowable voltage dip is defined in standards which is considered during the planning and design of networks including motor loads. However, an expansion of network is sometimes necessary due to an increase of load demand. It is difficult to restructure and resize the whole network and the utility seeks to defer the expansion to limit the financial consequences. Unfortunately in rural areas, many loads incorporate induction motors such as pumps, refrigerators, air conditioners and fans. The sizes of motors can be very large in hotels, farms, factories etc. and they can create large voltage dips during starting due to the higher supply impedance of rural networks. The dip becomes worse if more than one motor start at the same time. Motor start transients can cause a large voltage dip at the motor terminal which can last for a few seconds with the worst case occurring at the motor terminals. This dip affects the surrounding customer loads and may cause sensitive loads to malfunction. As the reaction of tap changer is very slow, it takes up to a minute for it to respond which might not be helpful for transient restoration. Also, there is a limit for the

number of step sizes and maximum voltage available to raise the voltage level. Thus the customers at the far end of rural lines experience significant voltage variations during motor starts and other transient loading.

DG with voltage control capability in a distribution network can reduce the voltage dips caused by sudden load demand, load change, motor start etc. and hence improve quality of supply. During a motor start, the DG voltage controller responds immediately and reduces the voltage dip. The DG controller needs to be designed in such a way that it is capable of handling the transient situation. The voltage improvement by DG depends on the size of DG and the current demand by the motor at the time of its start. An inverter based DG is capable of fast voltage control and mitigates the motor transient. Even rotary type of DG can help the motor transient without any special control. The DG can also help to speed up the transient restoration. In the proximity of DG, the depth and width of voltage dip are reduced dramatically.

Figure 5.1 shows the voltage dip caused by starting a 35 kW motor on the line modeled as a balanced disturbance. A DG of rotary type is capable of reducing the motor transient effects, since the DG can respond at every instance of time and thus correct for the transients. The speed of response is limited by the time constants on the motor field and will thus take nearly a second to fully respond. If the DG is nearer to the motor, the effects of motor start are reduced. Figure 5.2 shows the improvement of motor terminal voltage by DG with a synchronous generator. It is seen in Figure 5.2 that the depth and width of voltage dip have been reduced by the presence of DG.

It helps to speed up the transient restoration. From Figures 5.1 and 5.2 it is seen that the dip lasts 12.5 seconds at 0.92 per unit without DG and reduces to 0.5 second in the

presence of rotary DG. For inverter based DG interfacing, the reactive correction from the inverter can respond in milliseconds. The rating of a line support inverter DG may not be sufficient to fully correct for all motor starts but the inverter can significantly stiffen the line voltage to such transients and reduce the depth of dip even close to the connection point of the motor being started.

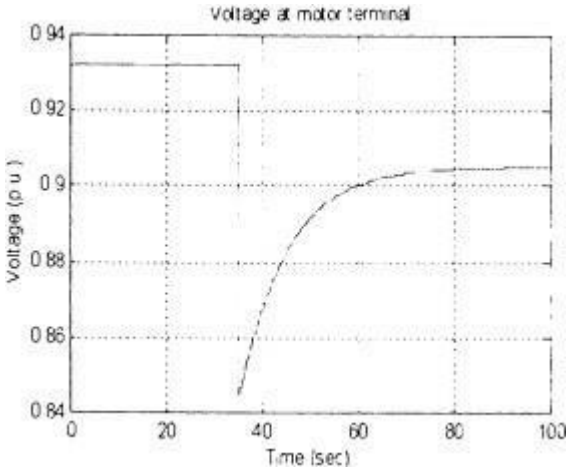

Figure 5.1 Voltage dip at 35 kW motor terminal with 135 kW load and fixed nominal tap (Lowest voltage = 0.871 per unit, 0.9 per unit for 5.5 s., 0.92 per unit for 12.5 s)

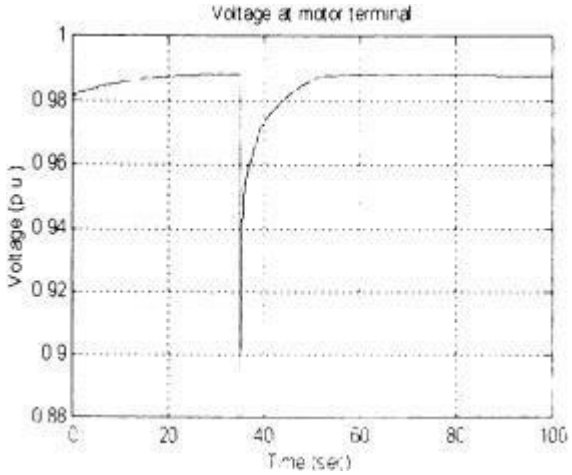

Figure 5.2 Voltage dip at 35 kW motor terminal with 135 kW load, fixed nominal tap and 100 kVA DG-PQ (Lowest voltage = 0.8825 p.u., 0.9 p.u. for 0.4 s., 0.92 p.u. for 0.5 s)

Harmonic Effects with DG:

Voltage and current waveforms of the network are distorted due to loads such as adjustable speed drives, arc furnaces, electronic converters, rectifiers etc. As a result, harmonic currents and voltages are generated in the network. Distributed generators may introduce or reduce the harmonics in the network, depending upon the design of generator and selection of technology. Proper selection and design of generator and its control can avoid harmonic injection by the generator into the network. For some cases the DG control can alleviate harmonic effects by reducing harmonic voltages and thus reducing voltage distortion. PWM inverter DG is the best choice if a key objective of DG installation is to reduce harmonics effects.

Pure rotary type generators, with accurate design, can generate voltage waveforms that are free of harmonics. However, depending on the design of the generator windings (pitch of the coils), core non-linearity, grounding and other factors, they may become a source of harmonics and generate distorted voltage with a significant amount of harmonics.

Figure 5.3 shows the voltage distortions by the 5th harmonic current and with and without DG. It is found that without DG the maximum distortion level by this harmonic current is 7.10%. Rotary DGs, with 3% voltage distortion at 5th harmonic can reduce this number to 3.30%. Rotary DGs with zero harmonic generation reduce the peak distortion to 0.93% and PWM inverter based DGs reduce the distortion to 0.65%. The inverter DGs are designed in such a way that the connection point voltages of the DGs at the 5th harmonic become zero. Pure rotary DGs refer to those generating zero harmonic voltage internally. PWM inverter based DG gives the best solution for resolving harmonic problems and provides the best reduction in voltage distortion.

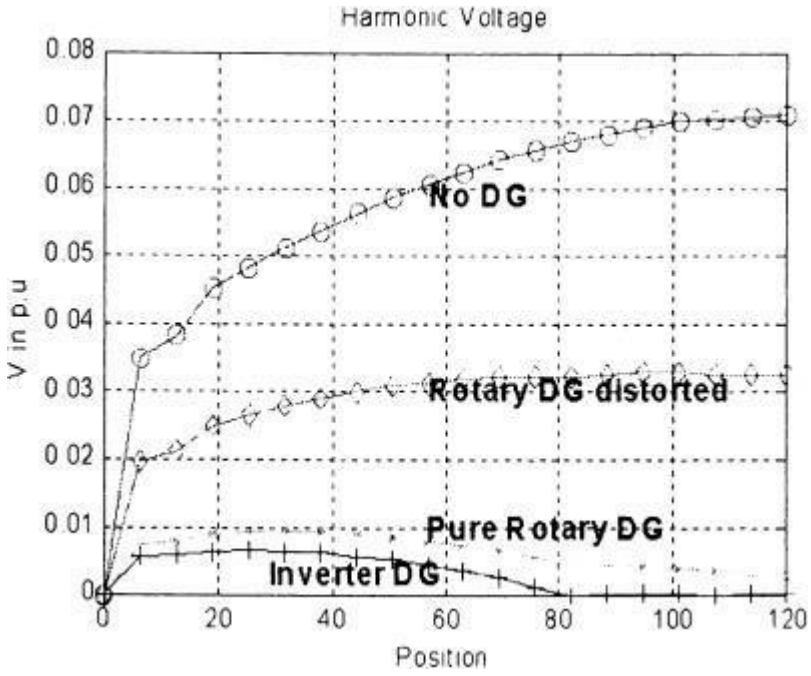

Figure 5.3 Harmonic voltages with and without DG

Voltage Flicker and Voltage Fluctuation:

Voltage flicker can be described as dynamic variations of network voltage magnitude and can be sufficient in duration and frequency to allow visual observations of a change in the intensity of electric light source. Human beings are especially sensitive to luminance fluctuations around 8.8Hz.

Flickering lamps are disturbing if the total flicker level on the grid is 0.7 to 1 per unit. Voltage flicker caused by variations in real power output due to fluctuations in renewable energy sources depends on the resource, the characteristics of the generator and the impedance of the network. However, voltage flicker and voltage fluctuation can be mitigated by DG through active mitigation policies. Mitigation approaches for induction generators include reduced voltage starts, as well as speed matching and active or passive reactive power compensation. Synchronous generators might require tighter synchronization and voltage matching. Inverters might be controlled to limit inrush currents and changes in output

levels. Energy storage devices such as flywheels, variable speed drives for wind generators or batteries might be used to compensate for fluctuating power levels.

ISLANDING ISSUES:

DG units operate in parallel with power distribution system. This parallel operation of a DG unit with the utility grid system may result in islanding operation of DG due to a fault in the utility system. Islanding can be defined as the operating condition where a DG maintains the electric supply on a local section of distribution system, which is disconnected from the utility source following an opening of a circuit breaker on a distribution line.

Loss of main supply may initiate an independent power island, which is usually caused by tripping of a circuit breaker. Depending upon the capabilities, DG will continuously support the independent power island as long as the system frequency and voltage are maintained within the required operation limits. However, proper protection with communication can avoid all the issues like safety hazard, grounding system, synchronization, orderly restoration of utility supply and supply quality and DG can be used for dedicated islanding operation. Islanding operation can support the supply continuity in rural/remote areas.

Anti-Islanding Protection:

Fault clearance in utility distribution network is performed by relays located close to the fault, which isolates the faulty part from the utility network or causes the main supply breaker trip off. Also, the mains can fail to supply continuously due to the unpredictable troubles in operation and control or abnormalities. In these situations, DG may become islanded from the normal grid supplies, which, without proper arrangements, is undesirable. Islanding operation may leave a section of the network without an earth and the fault level may not be sufficient to operate protection relays. Also, the synchronization facilities of a DG system may not be able

to re-synchronize correctly with the main system when it returns. Protection applied to the inter-tie between the DG and the utility network must be capable of detecting the loss of grid supply and tripping the circuit breaker on the inter-tie. If a small DG unit dedicated for local supply only becomes islanded, power will flow from DG to the utility circuit of island through inter-tie. If the facility containing the DG did not normally export power, islanding could be detected by a reverse power relay monitoring at the inter-tie power- flow. If the DG normally exports power to the grid system, loss of the main supply could cause a severe overloading of the DG unit, which could be detected by under/over voltage and under/over frequency relays. Main passive techniques are under/over voltage and under/over frequency relays, rate of change of frequency (ROCOF) and phase displacement monitoring or vector shift. Among them rate of change of frequency and vector shift are well-known techniques to detect loss of mains.

Vector Shift:

During normal operation the terminal voltage of a synchronous generator DG will lag the emf by the rotor displacement angle. If the grid supply is suddenly disconnected from the DG network, the load on the DG will increase and this will cause a shift in the rotor displacement angle, as the terminal voltage will jump to a new value and the phase position will change. Vector shift relays continuously monitor the duration of each cycle and initiate instantaneous tripping if the duration of a cycle changes as compared to the previous cycle by an angle greater than the vector shift setting. The vector shift settings vary between 6° and 12°. The recommended setting is 6°, but on weak network it could be 12° to prevent mal-operation during switching of a large load.

Dedicated Islanding Operation:

For a variety of reasons, both technical and administrative, the prolonged operation of a power island fed from the distributed generator but not connected to the main distribution network is generally considered to be unacceptable. However, islanding operation offers opportunities for improvement in reliability and supply continuity. If DG is owned by utilities, then number of issues will be reduced and the utility may decide to offer islanding operation. Also, DG may be located at a remote area where utility supply is of poor reliability and power failures or blackouts occur frequently and are sustained for a long time. In this situation, islanding operation of DG may be acceptable.

For an islanding operation, the simplest case is when the DG is installed at customer premises near the islanding breaker and when the DG is capable of supplying the maximum customers' loads. During islanding condition, the DG should supply power at the same frequency and voltage levels that existed without islanding. When the main is reenergized, the DG system needs to be re-synchronized with the main supply. A communication scheme is required to resynchronize the DG with the utility system. The communication system may be set up through a power line carrier, dial-up or networking cables between the DG control panel and main breaker and only a few bytes of control data will be transmitted through this system. If the DG is nearer to the main breaker, the cost of communication set up will be less. Through the communication system, the control commands (may be in digital form of 1 or 0) will be sent to the DG governor to step up or step down the frequency level to adjust the main frequency. The frequency of the DG can be adjusted using ripple control. Check synchronization will check the phase angle and frequency of both networks and will lock automatically when they have reached the acceptable limits. In the case of main system failure, the main breaker should be opened immediately and a control command should be

sent to the DG panel to let it know that the DG has become islanded and it needs to adjust its generation level to meet the customers' demands. The DG control panel should receive a signal when the main supply returns. For the case of multiple DGs in the network, it is possible to design the control and communication schemes for each of them to operate in a common islanded mode and to resynchronize with the main system through ripple control scheme when the main returns. Careful design for control and communication is required for the complex systems with multiple islanded DG.

Rate of Change of Frequency (ROCOF):

ROCOF works on the assumption that following a loss of grid supply DG is required suddenly to supply an increased amount of load. For a synchronous or induction generator or an inverter DG with an artificial frequency droop, the resulting generation deficit will cause a rate of change of frequency. The operating threshold for a ROCOF relay is adjusted between 0.1 Hz/s and 10 Hz/s and the operating time is defined by the number of power frequency measuring periods over which the rate of change of frequency is calculated which can be adjusted between 2 (40ms,minimum) and 100 (2s, maximum) at 50Hz, typically. This technique is usually considered an appropriate one for detecting loss of mains on a distribution network but not ideal for the transmission or sub transmission levels due to the nuisance trips.

DISTRIBUTION LINE COMPENSATION:

Real and reactive injection into distribution lines can affect the voltage profile on lines and the power quality in proximity of the injection point.

Generators may be sited to make the best use of renewable resources such as wind or solar energy. These points may not be close to connection to high voltage lines and the connection

may be required to lines in the distribution system. The generation may be located in customer premises and the real power export be determined by environmental factors or by the attraction of a particularly high pool price. The variability of this loading and the effect of reverse power flow have the potential to adversely affect the power quality in proximity of these generators.

Conversely long distribution lines can be aided in control of voltage profile by the installation and control of distributed generation geared to the needs of the network. This section looks at controlling distributed generation to affect the voltage profile and suppress dips particularly on long rural lines.

Rural distribution lines are typically long with a significant resistive component of line impedance. They are exposed to high levels of weather and environmental faults. Customers on rural lines are more exposed to voltage dips from faults or equipment of other customers. Shunt reactive compensation is an effective means of voltage control for transmission lines but is much less effective when supporting voltage on high resistance lines. This change of effectiveness is illustrated in a study of a line with uniformly distributed load.

A distribution line can be modeled as a source with a series impedance to represent the line itself and equal shunt impedances to represent the loads.

Sensitivity analysis is performed on an example distribution system with real and reactive generation at the remote end to investigate the relation between the line characteristics and network voltage compensation. To demonstrate the relation, three cases of line parameters are considered. They are (a) R <C, (b) R = X and (c) R > X, where R and X are the line resistance and reactance respectively. Real and reactive injections by DG are varied from zero to three-times the total load in the network. The solution for the voltage on

the feeder with distributed load (modeled as admittances) is obtained from the admittance matrix. The results are reported in Figure 5.4, which shows the voltage sensitivity.

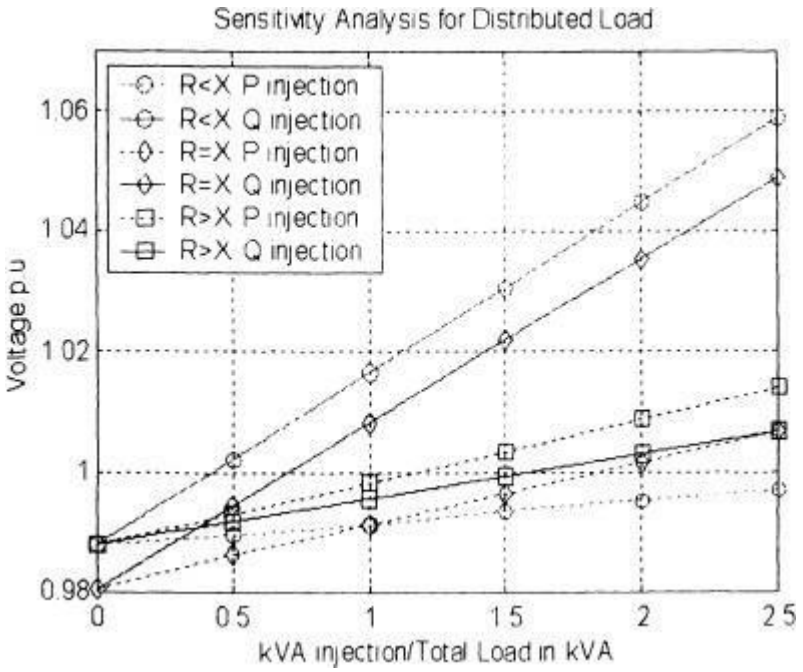

Figure 5.4 Line Voltage Sensitivity for distributed load

Case-I: Heavy Load:

In this we consider various types of compensations. For these studies, the following parameters are used

- Source voltage of 1.0 per unit with negligible source impedance.
- Line resistance = 0.3 per unit, line reactance = 0.5 per unit and line reactive admittance = 0.2 per unit.
- Total load admittance = 2.0 per unit.

Shunt Reactive Compensation: The shunt capacitor is able to support the voltage at its point of connection. The line impedance and loading level determine the curvature of the voltage profile. This level of compensation however required a voltage-ampere (V A) of 1.4

per unit to achieve the profiles shown in Figure 5.5. This is a significant fraction of the total line rating and would not appear to be a cost effective voltage control solution.

Series Reactive Compensation: The series compensation of high voltage transmission lines to reduce reactive impedance and thus increase transfer capacity. The major concern for series compensation has been to

- Avoid sub synchronous resonance,
- Be able to adjust the level of compensation and
- Provide protection for the capacitive element.

For distribution lines, some series capacitive compensation can be beneficial but the last two aspects mentioned above remain. At peak load there is a high reactive demand and voltage control is achieved through use of a large admittance of shunt capacitive compensation. For series capacitance the rise of current with load will intrinsically cause the required reactive power variation with loading. This use of series capacitance to cancel a portion of the line reactance is effective for HV lines but when the line resistance is a significant component of the line voltage drop, the line drop correction will be strongly load power factor dependent. For long lines at light load the line capacitance can be sufficient to cause a significant voltage rise which is known as Ferranti effect. To correct for this voltage rise, the line requires additional inductive reactance. For some lines, this may be supplied by switched shunt reactors. This variation in reactive requirements means that fixed series capacitors will rarely be a complete voltage control solution.

The line compensation variation could be achieved with switched series elements. For example a circuit breaker could be used to bypass the series capacitor. The main difficulty with a circuit breaker solution is that the regular switching to follow the daily load cycle can be

an onerous duty on the circuit breaker which may lead to reduced life. Another issue is that unless precise point-on-wave switching is used there can be significant switching transient, which require a series reactance to limit the peak switching current.

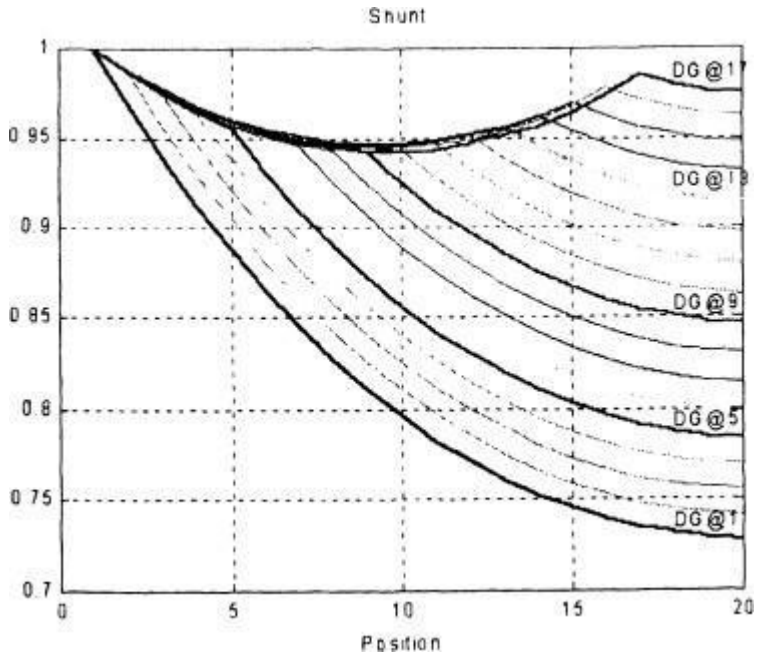

Figure 5.5 Voltage profiles for varying location of shunt reactive compensation

Case-2: Light Load:

The lightly loaded line can have significant rises in voltage due to the Ferranti effect. When the line capacitive admittance was kept at 0.2 per unit total and the load admittance was kept at 0.002 per unit, the tap changer control achieved the voltage profile shown in Figure 5.6.

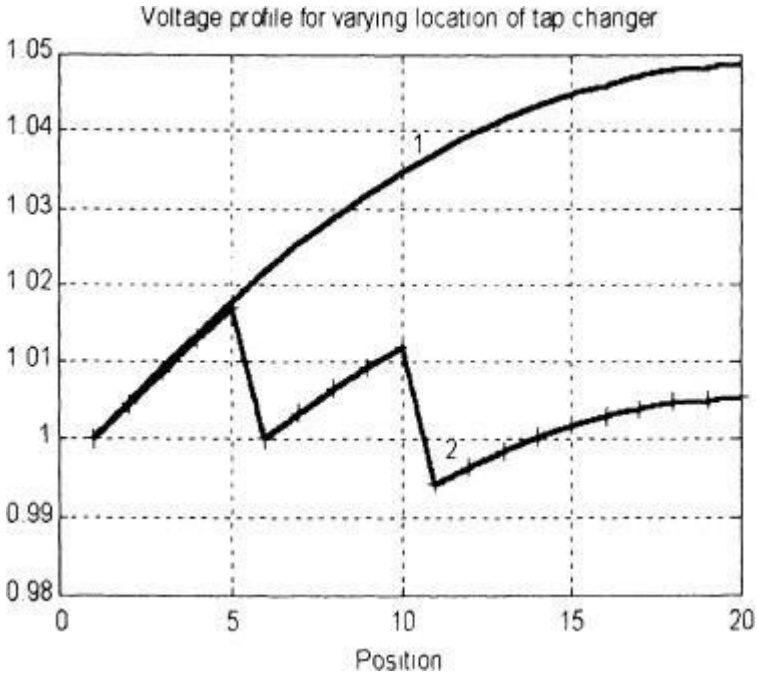

Figure 5.6 Tap changer for Light load

REAL GENERATION:

The reactive series compensator would not be expected to be as beneficial as in transmission applications because there is a much higher resistive voltage drop of the distribution line to compensate. If a series inverter were used to implement this series compensation the control based on the downstream voltage could respond rapidly to compensate for load changes which would otherwise tend to create voltage dips but the effectiveness of maintaining the profile with pure reactive series compensation is questionable.

Series Real Injection: Another option is the use of series real power injection. Consider the series insertion of a voltage in phase with current as shown in Figure 5.7. The power must come from somewhere and the simplest way is to provide it from a shunt element which draws current in phase with the line to neutral voltage.

With respect to Figure 5.6, the output (side-B) voltage satisfies

$$V_B = V_A + \Delta V$$

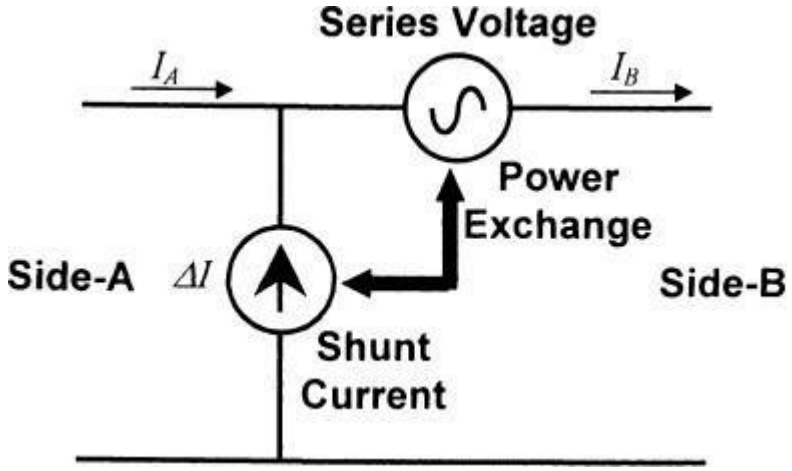

Figure 5.7 Series compensation with real power

where V_A is the side-A voltage and ΔV is the injected voltage. Similarly the currents satisfy

$$I_A = I_B + \Delta I$$

and for power balance we have

$$V_A I_A = V_B I_B$$
$$V_A (I_B + \Delta I) = (V_A + \Delta V) I_B$$

If we require $\Delta V = \alpha V_A$, then

$$V_A I_A = (1 + \alpha) V_A I_B$$

The above equation yields

$$I_A = (1 + \alpha) I_B$$

Controlled series real power injection is equivalent to tap changer operation. For this analysis it is assumed that inverters with shunt and series elements are equivalent to tap changers apart from the speed of response and the lack of automatic control of reactive power. For a high resistance line under heavy load, a set of tap changers has the potential to provide a good voltage profile.

The tap changers can operate independently to step towards making the downstream voltage close to the target of 1.0 per unit voltage. The curve in Figure 5.8 shows the initial voltage changing in a series of steps to make the downstream voltages close to 1.0 per unit. For this load however the cost is a significant suppression of upstream voltage. Part of the difficulty can be the transmission of reactive power so we next consider a shunt reactive element in combination with the tap changers.

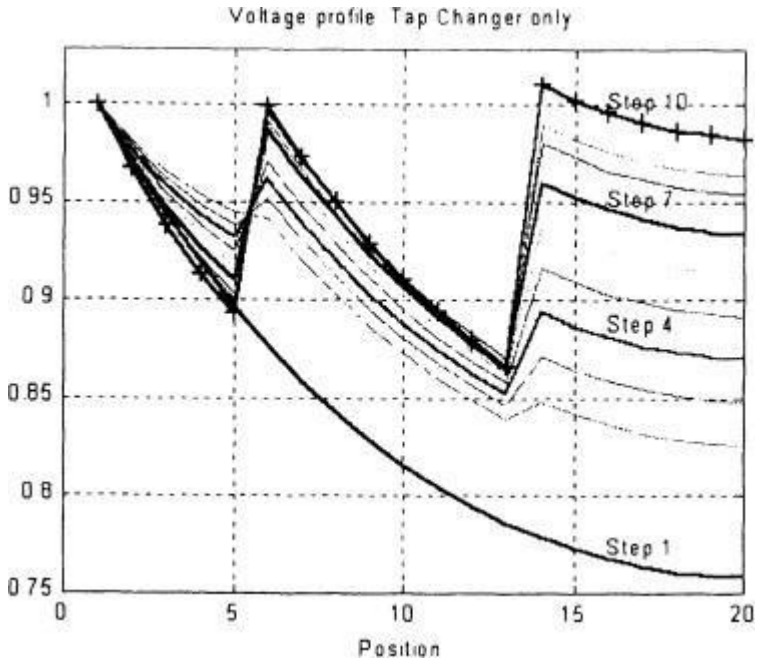

Figure 5.8 Two Tap Changers

Shunt Real Injection: For a rural line a single shunt generator towards the end of the line can create an acceptable voltage profile. This indicates that shunt reactive power or Distributed Generation can be a very effective means of voltage control on heavily loaded distribution lines requiring injection at a single point for compensation while for the best alternative three tap changer locations with reactive capacity were required. Fig 5.9 shows the case of total load admittance of 2.0 per unit with generation at 30 degrees leading.

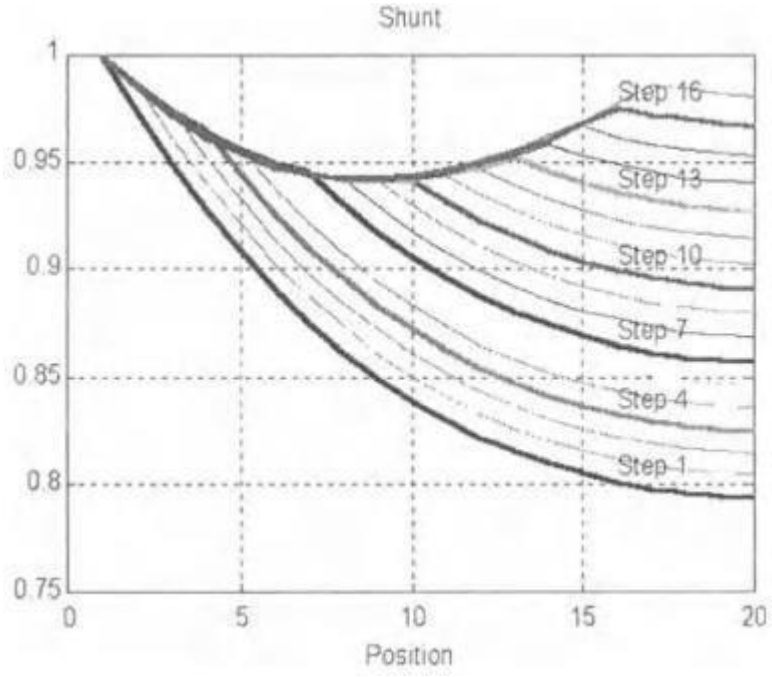

Figure 5.9 Shunt real generation

PROTECTION ISSUES FOR DISTRIBUTED GENERATION:

One of the objections to the inclusion of generation within the distribution network is the potential for adverse impact on the line protection. For generation added to the transmission network, distance protection schemes or unit protection may be used. Distance protection observes the apparent impedance along the line and infers the location of any fault from this value knowing the line impedance per unit distance; if the fault is observed in the line section

to be protected then the distance protection unit initiates the opening of the circuit breakers. The distribution network has loads connected along the line sections and the inference of fault location from apparent impedance is more prone to error. Unit protection measures the current into and out of a protected element and the difference in current is an indication of fault current. For distribution lines the difference of currents in a line section is due to loads as well as potential faults. However the main issue is that unit protection requires a secure communication scheme to permit line current differencing. This additional cost of communication generally makes it unattractive for distribution use.

The DG itself will monitor its current and trips on over current. If the fault is close to a low impedance DG, the line protection may not detect the fault until the DG has tripped since most of the fault current may be supplied from it. This hiding of the effect of faults can delay the response of the main protection and interfere with the provision of backup protection.

Another aspect of concern is the detect ability of high impedance faults. When part of the fault current is supplied by the DG and part by the main line the presence of the DG will raise the fault current that can go undetected. This may not always cause particular problems depending on the nature of high impedance faults that are of concern. For many rural lines, the detection of fault current of a downed conduction is a significant concern. For sandy soils the fault current can be quite low. Fortunately it has been found that the arc voltage often limits the voltage at the faulted point. A constant voltage characteristic of this type of high impedance fault implies that low rated DG does not interfere with fault detection capability.

TECHNOLOGIES FOR DISTRIBUTED GENERATION:

There are many possibilities for distributed generation which tends to be defined in terms of the size of the generator being less than 1 MW or in terms of its connection to the distribution system. The main demand is for

- Small photovoltaic or wind power for residential or small office applications.
- Micro turbines and fuel cells tend to be a little larger than required for single residential applications but can serve small industrial sites or apartment buildings.
- Larger size generation can come from micro hydro or larger wind.

The technologies, which inherently produce dc such as photovoltaic and fuel cells, need an inverter interface. Micro turbines operate at a much higher frequency than mains and require a power electronic interface. Micro hydro and wind have been generally interfaced using induction generators or synchronous machines. With larger wind machines the difficulties of operating an induction generator into a weak grid as well as improved efficiency have led to a rise in inverter interfaced wind generation.

POWER QUALITY IMPACT FROM DIFFERENT DG TYPES:

In general inverters can be used to strengthen the voltage of a weak supply in the manner discussed in earlier chapters. Induction and synchronous machines can act as points or voltage supply and at least for short transients can strengthen the supply and reduce the effects of voltage dips or harmonics. The induction generator however can be defluxed by a short circuit near its terminals and this result in increasing of the duration of a fault.

Another impact on power quality for the use of distributed generation can come from fluctuations in the real power supplied from wind or the sudden changes of output from a solar cell. For an induction generator interface to a wind generator, gusty wind can produce

significant power fluctuations and corresponding variations in the local voltage. When inverters are used in the interface, the reactive power control can help to reduce the effect of real power fluctuations and help in maintaining the local voltage. For a long feeder the voltage magnitude of the two ends may be well controlled but significant power fluctuations will give rise to voltage magnitude and angle fluctuations for customers along the feeder. Thus power quality can be significantly enhanced through the use of inverter interfaces but the effects of wind fluctuations on the flicker for some situations cannot be fully corrected.

Induction Generator:

Consider wind turbine connected to Induction Generator. Because the power depends on the cube of wind speed, the peak of the power can vary significantly. The lagging power factor means that as the power level increases, the rotor accelerates and then provides a new level of output power. The terminal voltage falls as the export power rises and this can give flicker to the customers connected in proximity to this wind generator. This is shown in Figure 5.10. Overall there will be a significant range of loading on the feeder giving a substantial variation in voltage level.

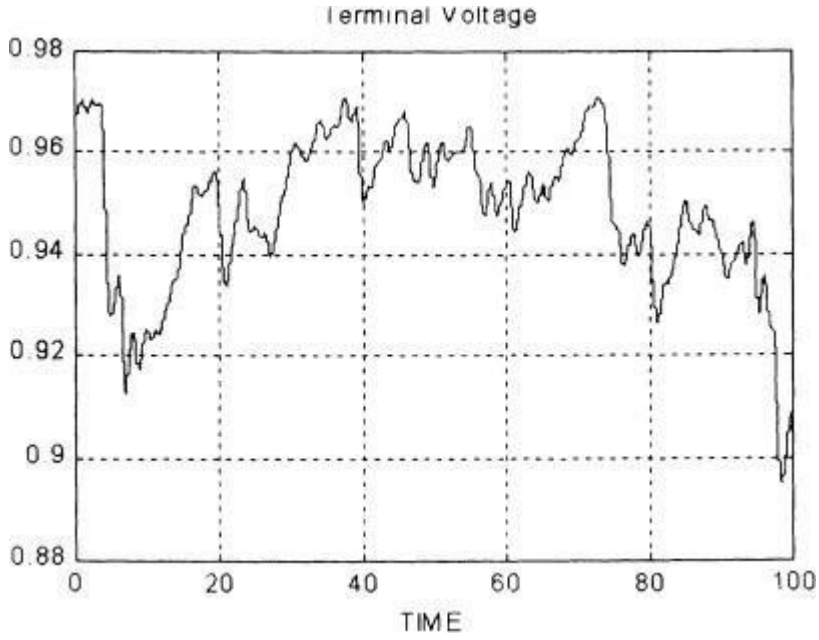

Figure 5.10 Variation in terminal voltage using induction generator

Inverter at Unity Power Factor: An inverter does not have the luxury of significant energy storage so there is a significant variation in the exported power to maintain the DC bus voltage in reasonable limits. The variation in export power is almost as large as the variation in wind power. The inverter is current controlled such that the power export is unity at the point of connection. The export level rises and this also gives rise to a voltage drop.

Inverter with PI Controlled Power Factor: The best means to correct for voltage variations are to a have fast correction of the reactive power to match the changes in real power. This control uses a PI controller on reactive power with a feed forward term based on wind power levels.